SEW EURODRIVE

Catalog

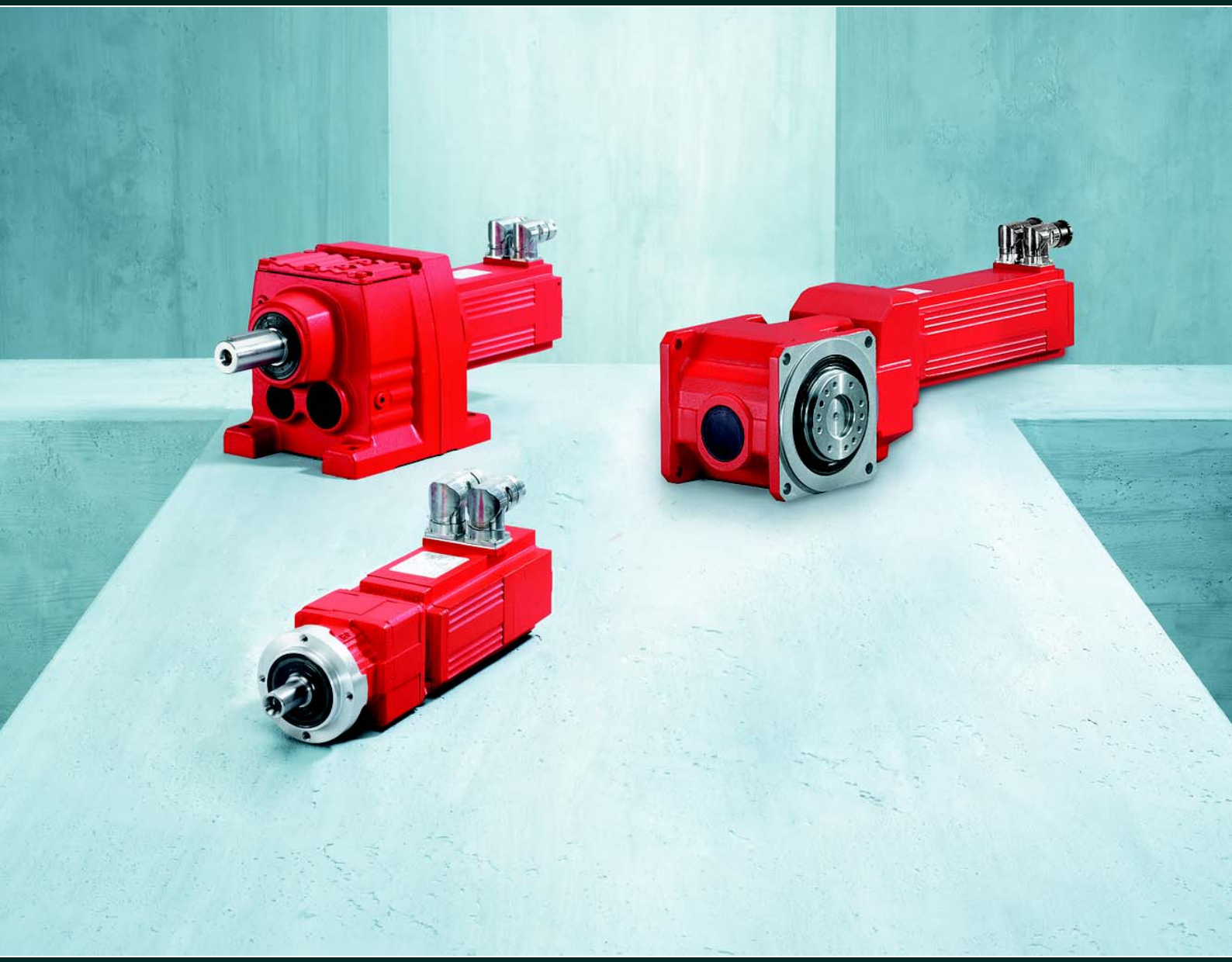

Synchronous Servo Gearmotors

CMP40 – 100 Servomotors
with R, F, K, S, W, BS.F, PS.F, PS.C Gear Units

Edition 05/2010

16833619 / EN








KKFU 144794 3
42G1

1 Introduction 6
1.1 The SEW-EURODRIVE Group of Companies 6
1.2 Products and systems from SEW-EURODRIVE 7
1.3 Additional documentation 9
1.4 Product names and trademarks 10
1.5 Copyright notice 10

2 Product Description of Gear Units and Gearmotors 11
2.1 General information 11
2.2 Corrosion and surface protection 12
2.3 Extended storage of R, F, K, S, W gear units 14
2.4 General product description R, F, K, S, W gear units 16
2.5 General product description BS.F, PS.F, PS.C gear units 19
2.6 Explosion protection according to ATEX 21

3 Overview of Types and Unit Designation 22
3.1 Types and options of R, F, K, S, W gear units 22
3.2 Types and options of BS.F, PS.F and PS.C gear units 34
3.3 Type designations of servo gearmotors 38
3.4 Nameplate for servo gearmotors 39
3.5 Overview of servo gearmotors 40

4 Project Planning Notes for Servo Gearmotors 41
4.1 Additional documentation 41
4.2 Data for drive and gear unit selection 42
4.3 Project planning procedure 44
4.4 Project planning notes for R, F, K, S, W gear units 48
4.5 Project planning notes for BS.F, PS.F, PS.C gear units 53
4.6 Project planning example Gantry with servo drives 57

5 Mounting Positions of Gear Units 68
5.1 General information on the mounting positions of R, F, K, S, W gear units 68
5.2 Order information for servo gearmotors R, F, K, S, W gear units 69
5.3 General information on mounting positions for BS.F, PS.F, PS.C gear units 71
5.4 Order information for servo gearmotors BS.F, PS.F, PS.C gear units 72
5.5 Order information for servo gearmotors 74
5.6 Key to the mounting position sheets 76
5.7 Mounting positions of helical gearmotors R 78
5.8 Mounting positions of parallel shaft helical gearmotors F 83
5.9 Mounting positions of helical-bevel gearmotors K 86
5.10 Mounting positions of helical-worm gearmotors S 89
5.11 Mounting positions of SPIROPLAN® gearmotors W 95
5.12 Mounting positions of helical-bevel servo gearmotors BSF 98
5.13 Mounting positions of planetary servo gearmotors PSF, PSC 107

6 Design and Operating Notes 109
6.1 Reduced backlash gear unit types 109
6.2 Assembly/disassembly of gear units with hollow shaft and key 110
6.3 Gear units with hollow shaft 114
6.4 TorqLOC® hollow shaft mounting system for gear units with hollow shaft. 115
6.5 Gear units with flange block shaft 116
6.6 Shouldered hollow shaft with shrink disk option 117
6.7 Fastening the gear unit 124
6.8 Torque arms 124
6.9 Flange contours of RF.. and R..F gear units 125
6.10 Flange contours of FF.., KF.., SF.., and WF.. gear units 126
6.11 Flange contours of FAF.., KAF.., SAF.., and WAF.. gear units 127
6.12 Fixed covers 128
6.13 Oil aging and vibration sensor for R, F, K, S, W gear units 130
6.14 Lubricants and fill quantities 134

7 Important Notes on Selection Tables and Dimension Sheets 144
7.1 Notes on the selection tables 144
7.2 Notes on dimension sheets 145
7.3 Gearmotor dimensions 148
7.4 Dimensions for CMPZ motors 149

8 Helical Gearmotors – R Gear Units 150
8.1 Types 150
8.2 RX57 - 107 / CMP – Selection tables, dimension sheets 151
8.3 R07 - 107 /CMP – Selection tables, dimension sheets 153

9 Parallel Shaft Gearmotors – F Gear Units 237
9.1 Types 237
9.2 F27 - 107 / CMP – Selection tables, dimension sheets 239

10 Helical-Bevel Gearmotors – K Gear Units 310
10.1 Types 310
10.2 K37 - 107 / CMP – Selection tables, dimension sheets 312

11 Helical-Worm Gearmotors – S Gear Units 372
11.1 Types 372
11.2 S37 - 67 / CMP – Selection tables, dimension sheets 374

12 SPIROPLAN® Gearmotors – W Gear Units 401
12.1 Types 401
12.2 W37 - 47 / CMP – Selection tables, dimension sheets 403

13 Helical-Bevel Gearmotors – BS.F Gear Units 417
13.1 Types 417
13.2 BS.F202 - 802 / CMP – Selection tables, dimension sheets 419
13.3 Front-end mounting – Dimension sheet 455
13.4 Torque arm – Dimension sheet 456
13.5 Tolerances and chamfers of flange block gear units – Dimension sheet ... 457

14 Planetary Gearmotors – PSF/PSBF Gear Units 458
14.1 Types 458
14.2 PSF121/122 - 921/922 – Selection tables, dimension sheets 459
14.3 PSBF221/222 - 821/822 / CMP – Selection tables, dimension sheets 485
14.4 Tolerances and chamfers of flange block gear units – Dimension sheet ... 502

15 Planetary Gearmotors – PS.C Gear Units 503
15.1 Types 503
15.2 PSC221/222 - 621/622 / CMP – Selection tables, dimension sheets 504

16 Main Technical Data of Servomotors 517
16.1 Technical data of CMP motors 518
16.2 Technical data of CMPZ motors 522

17 Abbreviation Key and Index 524
17.1 Abbreviation key 524
17.2 Address Directory 529

1 Introduction

1.1 The SEW-EURODRIVE Group of Companies

Global presence

Driving the world with innovative drive solutions for all branches and every application. Products and systems from SEW-EURODRIVE are used in a multitude of applications worldwide. Be it in the automotive, building materials, food and beverage or metal-processing industry the decision to use drive technology "made by SEW-EURODRIVE" stands for reliability for both functionality and investment.

We are represented in the most important branches of industry all over the world: with 13 manufacturing plants, 67 assembly plants in 47 countries and our comprehensive range of services, which we consider an integrative service that continues our commitment to outstanding quality.

Always the right drive

The SEW-EURODRIVE modular concept offers millions of combinations. This wide selection enables you to choose the correct drive for all applications, each based on the required speed and torque range, space available and the ambient conditions. Gear units and gearmotors offering a unique and finely tuned performance range and the best economic prerequisites to face your drive challenges.

The gearmotors are powered by MOVITRAC® frequency inverters, MOVIDRIVE® inverters and MOVIAXIS® multi-axis servo inverters, a combination that blends perfectly with the existing SEW-EURODRIVE program. As in the case for mechanical systems, the development, production and assembly is also carried out completely by SEW-EURODRIVE. In combination with our drive electronics, these drives provide the utmost in flexibility.

Products of the servo drive system, such as low backlash servo gear units, compact servomotors or MOVIAXIS® multi-axis servo inverters provide precision and dynamics. From single-axis or multi-axis applications all the way to synchronized process sequences, servo drive systems by SEW-EURODRIVE offer a flexible and customized implementation of your application.

For economical, decentralized installations, SEW-EURODRIVE offers components from its decentralized drive system, such as MOVIMOT®, the gearmotor with integrated frequency inverter or MOVI-SWITCH®, the gearmotor with integrated switching and protection function. SEW-EURODRIVE hybrid cables have been designed specifically to ensure cost-effective solutions, independent of the philosophy behind or the size of the system. The latest developments from SEW-EURODRIVE: MOVITRANS® system components for contactless energy transfer, MOVIPRO®, the decentralized drive control and MOVIFIT®, the new decentralized intelligence.

Power, quality and sturdy design combined in one standard product: With high torque levels, industrial gear units from SEW-EURODRIVE realize major movements. The modular concept will once again provide optimum adaptation of industrial gear units to meet a wide range of different applications.

Your ideal partner

Its global presence, extensive product range and broad spectrum of services make SEW-EURODRIVE the ideal partner for the machinery and plant construction industry when it comes to providing drive systems for demanding applications in all branches of industries and applications.

1.2 Products and systems from SEW-EURODRIVE

The products and systems from SEW-EURODRIVE are divided into 4 product groups. These 4 product groups are:

1. Gearmotors and frequency inverters
2. Servo drive systems
3. Decentralized drive systems
4. Industrial gear units

Products and systems used in several group applications are listed in a separate group "Products and systems covering several product groups". Consult the following tables to locate the products and systems included in the respective product group:

1. Gearmotors and frequency inverters		
Gear units/gearmotors	**Motors**	**Frequency inverters**
• Helical gear units/helical gearmotors • Parallel-shaft helical gear units/parallel-shaft helical gearmotors • Helical-bevel gear units/helical-bevel gearmotors • Helical-worm gear units/helical-worm gearmotors • SPIROPLAN® right-angle gearmotors • EMS drives • Geared torque motors • Pole-changing gearmotors • Variable speed gear units/variable speed gearmotors • Aseptic gearmotors • Gear units/gearmotors to ATEX standard • Variable speed gear units/variable speed gearmotors to ATEX standard	• Asynchronous AC motors/AC brakemotors • Pole-changing AC motors/AC brakemotors • Energy-efficient motors • Explosion-proof AC motors/AC brakemotors • Torque motors • Single-phase motors/single-phase brakemotors • Asynchronous linear motors	• MOVITRAC® frequency inverters • MOVIDRIVE® inverters • Control, technology and communication options for inverters

2. Servo drive systems		
Servo gear units/servo gear-motors	**Servomotors**	**Servo drive inverters/servo inverters**
• Low backlash planetary servo gear units/planetary gear-motors • Low backlash helical-bevel servo gear units/helical-bevel gearmotors • R, F, K, S, W gear units/gear-motors • Explosion-proof servo gear units/servo gearmotors	• Asynchronous servo-motors/servo brakemotors • Synchronous servo-motors/servo brakemotors • Explosion-proof servo-motors/servo brakemotors • Synchronous linear motors	• MOVIDRIVE® servo inverters • MOVIAXIS® multi-axis servo inverters • Control, technology and communication options for servo drive inverters and servo inverters

3. Decentralized drive systems		
Decentralized drives	**Communication and installation**	**Contactless energy transfer**
• MOVIMOT® gearmotors with integrated frequency inverter • MOVIMOT® motors/brakemotors with integrated frequency inverter • MOVI-SWITCH® gearmotors with integrated switching and protection function • MOVI-SWITCH® motors/ brakemotors with integrated switching and protection function • Explosion-proof MOVIMOT® and MOVI-SWITCH® gearmotors	• Fieldbus interfaces • Field distributors for decentralized installation • MOVIFIT® product range – MOVIFIT® MC to control MOVIMOT® drives – MOVIFIT® SC with integrated electronic motor switch – MOVIFIT® FC with integrated frequency inverter	• MOVITRANS® system – Stationary components for energy supply – Mobile components for energy consumption – Line cables and installation material

4. Industrial gear units
• Helical gear units • Bevel-helical gear units • Planetary gear units

Products and systems covering several product groups
• Operator terminals • MOVI-PLC® drive-based control system

In addition to products and systems, SEW-EURODRIVE offers a comprehensive range of services. These include:

- Technical consulting
- Application software
- Seminars and training
- Extensive technical documentation
- International customer service

Visit our homepage at

→ **www.sew-eurodrive.com**

The website provides comprehensive information and services.

1.3 Additional documentation

Content of this publication

This "Synchronous Servo Gearmotors" catalog provides a detailed description of the following product groups from SEW-EURODRIVE:

- The combination of CMP synchronous servomotors mounted directly to
  - R, F, K, S, W gear units
  - BS.F gear units
  - PS.F gear units
  - PS.C gear units

The descriptions include:

- Product descriptions
- Overview of types
- Project planning information
- Visual representation of mounting positions
- Explanation on the order information
- Combination overviews and technical data
- Dimension sheets

For details on motor options, refer to the "Synchronous Servomotors" catalog/price catalog.

For details on gear unit options and adapters, refer to the "Gear Units" and "Servo Gear Units" catalogs/price catalogs.

For information on the combination of CFM servomotors with the above mentioned gear units, refer to the catalog/price catalog "Synchronous Servo Gearmotors", edition 04/2008.

Additional documentation

The following documents are available from SEW-EURODRIVE in addition to this "Synchronous Servo Gearmotors" catalog:

- "Synchronous Servomotors" catalog/price catalog
- "AC Motors" price catalog/catalog
- "Gear Units" price catalog/catalog
- "Servo Gear Units" price catalog/catalog
- "AC Motors Inverter Assignments and Characteristic Curves" manual

These price catalogs and catalogs offer the following information:

- Product descriptions
- Technical data and inverter assignments
- Important information about tables and dimension sheets
- Description of the different types
- Selection tables
- Dimension sheets
- Technical data
- Notes on adapter mounting

1.4 Product names and trademarks

The brands and product names in this catalog are trademarks or registered trademarks of the titleholders.

1.5 Copyright notice

Copyright © 2010 - All rights reserved.

Copyright law prohibits the unauthorized duplication, modification, distribution, and use of this document, in whole or in part.

2 Product Description of Gear Units and Gearmotors

2.1 General information

Coating

The gear units, synchronous servomotors and servo gearmotors from SEW-EURODRIVE are painted as follows:

Type	Coating according to DIN 1843
Synchronous gearmotor with BS.F.. / PS.F.. / ..PS.C..	RAL 9005 black
Synchronous gearmotor with R, F, K, S, W gear unit	

Special paints are available on request.

Weight specifications

Please note that all weights shown in the catalogs exclude the oil fill for the gear units and gearmotors. The weights vary according to gear unit type and gear unit size. The lubricant fill depends on the mounting position which means no universally applicable information can be given. For approximate lubricant fill volumes depending on the mounting position, refer to the gear unit catalog. For the exact weight, refer to the order confirmation.

Brakemotors

On request, motors and gearmotors can be supplied with an integrated mechanical brake. SEW-EURODRIVE brakes can be divided into two types:

- Type 1: DC-operated electromagnetic disk brake that is released electrically and applied with spring force, with working capacity and emergency stop properties.
- Type 2: DC-operated electromagnetic disk brake that is released electrically and applied with spring force, with the typical properties of a holding brake for highly dynamic servomotors.

Due to their operating principle, all brake types are applied if the power fails. This means they meet the basic safety requirements. A type 1 brake can also be released mechanically if equipped with manual brake release. All brake types are controlled by a control element that is either installed in the motor wiring space or the control cabinet.

Type 2 brakes can also be controlled directly by a suitable inverter or servo inverter, such as MOVIAXIS®.

A characteristic feature of the brakes is their extremely short design. The brake bearing end shield is a part of both the motor and the brake. The integral construction of the SEW-EURODRIVE brakemotor permits particularly compact and sturdy solutions.

International markets

On request, SEW-EURODRIVE supplies UL registered motors or CSA certified motors with connection conditions according to CSA and NEMA standard.

For the Japanese market, SEW-EURODRIVE offers motors conforming to JIS standard. Contact your sales representative to assist you in such cases.

2.2 Corrosion and surface protection

General information

SEW-EURODRIVE offers various optional protective measures for operation of motors and gearmotors under special ambient conditions.

The protective measures comprise two groups:

- Corrosion protection KS for motors
- Surface protection OS for motors and gear units

For motors, optimum protection is offered by a combination of KS corrosion protection and surface OS protection.

Special optional protective measures for the output shafts are also available.

KS corrosion protection

KS corrosion protection for motors comprises the following measures:

- All retaining screws that are loosened during operation are made of stainless steel.
- The nameplates are made of stainless steel.
- A top coating is applied to various motor parts.
- The flange contact surfaces and shaft ends are treated with a temporary anti-corrosion agent.
- Additional measures for brakemotors.

A sticker labeled "KORROSIONSSCHUTZ" (corrosion protection) indicates that special treatment has been applied.

	INFORMATION
	Motors with forced cooling fan are not available with KS corrosion protection.

OS surface protection

In addition to standard surface protection, motors and gear units are available with surface protection OS1 to OS4. The special procedure "Z" is also available. Special procedure "Z" means that large surface recesses are sprayed with a rubber filling prior to painting.

Surface protection[1]		Ambient conditions	Sample applications
Standard		Suitable for machines and systems in buildings and rooms indoors with neutral atmospheres. According to corrosivity category [2]: • C1 (negligible)	• Machines and systems in the automobile industry • Transport systems in logistics • Conveyor belts at airports
OS1		Suited for environments prone to condensation and atmospheres with low humidity or contamination, such as applications outdoors under roof or with protection. According to corrosivity category [2]: • C2 (low)	• Systems in saw mills • Hall gates • Agitators and mixers
OS2		Suitable for environments with high humidity or mean atmospheric contamination, such as applications outdoors subject to direct weathering. According to corrosivity category [2]: • C3 (moderate)	• Applications in amusement parks • Funiculars and chair-lifts • Applications in gravel plants • Systems in nuclear power plants
OS3		Suitable for environments with high humidity and occasionally severe atmospheric and chemical contamination. Occasionally acidic or caustic wet cleaning. Also for applications in coastal areas with moderate salt load. According to corrosivity category [2]: • C4 (high)	• Sewage treatment plants • Port cranes • Mining applications
OS4	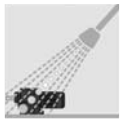	Suitable for environments with permanent humidity or severe atmospheric or chemical contamination. Regular acidic and caustic wet cleaning also with chemical cleaning agents. According to corrosivity category [2]: • C5-1 (very high)	• Drives in malting plants • Wet areas in the beverage industry • Conveyor belts in the food industry

1) Motors/brakemotors in degree of protection IP56 or IP66 are only available with OS2, OS3, or OS4 surface protection

2) To DIN EN ISO 12944-2 classification of ambient conditions

Special protection measures

Gearmotor output shafts can be treated with special optional protective measures for operation subject to severe environmental pollution or in particularly demanding applications.

Gear unit type	Measure	Protection principle	Suitable for
R, F, K, S, W BS.F202 - 602	**FKM oil seal (Viton)[1]**	High quality material	Drives subject to chemical contamination
R, F, K, S, W	**Surface coating of the contact surface of the oil seal**	Protective layer	Severe environmental impact and in conjunction with FKM oil seal (Viton)
R, F, K, S, W	**Stainless steel output shaft**	Surface protection with high-quality material	Particularly demanding applications in terms of surface protection

1) For PS.F, PS.C and BS.F802 , FKM oil seals (Viton) are used as standard.

NOCO® fluid

As standard, SEW-EURODRIVE supplies NOCO® fluid corrosion protection and lubricant with every hollow shaft gear unit. Use NOCO® fluid when installing hollow shaft gear units. Using this fluid can help prevent contact corrosion and makes it easier to disassemble the drive at a later time.

NOCO® fluid is also suitable for protecting machined metal surfaces that do not have corrosion protection, such as parts of shaft ends or flanges. You can order larger quantities of NOCO® fluid from SEW-EURODRIVE.

NOCO® fluid is a food grade substance according to USDA-H1. You can tell that NOCO® fluid is a food grade oil by the USDA-H1 identification label on its packaging.

2.3 Extended storage of R, F, K, S, W gear units

Type

You can also order gear units prepared for "extended storage." SEW-EURODRIVE recommends the "extended storage" type for storage periods longer than 9 months.

In this case, a VCI corrosion inhibitor (**v**olatile **c**orrosion **i**nhibitor) is added to the lubricant in these gear units. Please note that this VCI anti-corrosion agent is only effective in a temperature range of -25 °C to +50 °C. The flange contact surfaces and shaft ends are also treated with an anti-corrosion agent. If not specified otherwise in your order, the gear unit will be supplied with OS1 surface protection. You can order OS2, OS3 or OS4 instead of OS1.

Surface protection	Suitable for
OS1	Low environmental impact
OS2	Medium environmental impact
OS3	High environmental impact
OS4	Very high environmental impact

	INFORMATION
	The gear units must remain tightly sealed until taken into operation to prevent the VCI corrosion protection agent from evaporating. At the factory, the gear units are filled with oil to the appropriate level depending on the specified mounting position (M1 to M6). Check the oil level before you start operating the gear unit for the first time.

Storage conditions

Observe the storage conditions specified in the following table for extended storage:

Climate zone	Packaging[1)]	Storage location[2)]	Storage duration
Temperate (Europe, USA, Canada, China and Russia, excluding tropical zones)	Packed in containers, with desiccant and moisture indicator sealed in the plastic wrap.	Under roof, protected against rain and snow, no shock loads.	Up to 3 years with regular checks of the packaging and moisture indicator (rel. humidity < 50%).
	Open	Roofed, enclosed at constant temperature and atmospheric humidity (5 °C < ϑ < 60°C, < 50% relative humidity). No sudden temperature fluctuations. Controlled ventilation with filter (free from dust and dirt). Protected against aggressive vapors and shocks.	2 years or more with regular inspections. Check for cleanliness and mechanical damage during inspection. Check corrosion protection.
Tropical (Asia, Africa, Central and South America, Australia, New Zealand excluding temperate zones)	Packed in containers, with desiccant and moisture indicator sealed in the plastic wrap. Protected against insect damage and mildew by chemical treatment.	Under roof, protected against rain and shocks.	Up to 3 years with regular checks of the packaging and moisture indicator (rel. humidity < 50%).
	Open	Roofed, enclosed at constant temperature and atmospheric humidity (5 °C < ϑ < 50°C, < 50% relative humidity). No sudden temperature fluctuations. Controlled ventilation with filter (free from dust and dirt). Protected against aggressive vapors and shocks. Protected against insect damage.	2 years or more with regular inspections. Check for cleanliness and mechanical damage during inspection. Check corrosion protection.

1) Packaging must be carried out by an experienced company using the packaging materials that have been explicitly specified for the particular application.

2) SEW-EURODRIVE recommends to store the gear units according to the mounting position.

2.4 General product description R, F, K, S, W gear units

Ambient temperature

Gear units and gearmotors from SEW-EURODRIVE can be operated in a wide ambient temperature range. The following standard temperature ranges are permitted for filling the gear units according to the lubricant table:

Gear unit	Filled with	Permitted standard temperature range
Helical, parallel shaft helical and helical-bevel gear units	CLP(CC) VG220	-10 °C to +40 °C
Helical-worm gear units	CLP(CC) VG680	0 °C to +40 °C
SPIROPLAN® gear units	CLP(SEW-PG) VG460	-10 °C to +40 °C

The rated data of the gear units and gearmotors specified in the catalog/price catalog refer to an ambient temperature of +25 °C.

Gear units and gearmotors from SEW-EURODRIVE can be operated outside the standard temperature range if project planning is adapted to ambient temperatures from as low as up to -40 °C in the intensive cooling range until up to +60 °C. Project planning must take special operating conditions into account and adapt the drive to the ambient conditions by selecting suitable lubricants and seals. This kind of project planning is generally recommended for increased ambient temperatures as of size 97 and for helical-worm gear units with small gear ratios. SEW-EURODRIVE will gladly perform this project planning for you.

If the drive is to be operated on a frequency inverter, you must also consider the project planning notes of the inverter and take into account the thermal effects of inverter operation.

Installation altitude

Due to the low air density at high installation altitudes, heat dissipation on the surface of motors and gear units decreases. The rated data listed in the catalog/price catalog applies to an installation altitude of maximum 1000 m above sea level. Installation altitudes of more than 100 m asl must be taken into account for project planning of gear units and gearmotors.

Power and torque

The power and torque ratings listed in the catalogs refer to mounting position M1 and similar mounting positions in which the input stage is not completely submerged in oil. In addition, the gearmotors are assumed to be standard versions with standard lubrication and under normal ambient conditions.

Please note that the motor power shown in the selection tables for gearmotors is subject to selection. However, the output torque and the desired output speed are essential for the application and need to be checked.

Speeds

The quoted output speeds of the gearmotors are recommended values. You can calculate the rated output speed based on the rated motor speed and the gear unit ratio. Please note that the actual output speed depends on the motor load and the supply system conditions.

Noise levels

The noise levels of all SEW-EURODRIVE gear units, motors and gearmotors are well within the maximum permitted noise levels set forth in the VDI guideline 2159 for gear units and IEC/EN 60034 for motors.

Weights

Please note that all weights shown in the catalogs exclude the oil fill for the gear units and gearmotors. The weights vary according to gear unit type and gear unit size. The lubricant fill depends on the mounting position which means no universally applicable information can be given. Please refer to "Lubricants" in the "Design and Operating Notes" section for recommended lubricant fill quantities depending on the mounting position. For the exact weight, refer to the order confirmation.

Air admission and accessibility

The gearmotors/brakemotors must be mounted on the driven machine in such a way that both axially and radially there is enough space left for unimpeded air admission, for maintenance work on the brake and, if required, for the MOVIMOT® inverter. Please also refer to the notes in the motor dimension sheets.

Multi-stage gearmotors

You can achieve particularly low output speeds by using multi-stage gear units or multi-stage gearmotors. Such a setup requires a helical gear unit or gearmotor on the input end as a second gear unit.

When doing this, it is necessary to limit the motor power depending on the maximum permitted output torque of the gear unit.

Reduced backlash design

Helical, parallel shaft helical and helical-bevel gear units with reduced backlash are available as of gear unit size 37. The circumferential backlash of these gear units is considerably less than that of the standard versions so that positioning tasks can be solved with great precision. The circumferential backlash is specified in angular minutes ['] in the technical data. The circumferential backlash for the output shaft is specified without load (max. 1% of the rated output torque); the gear unit input end is blocked. For further information, refer to section "Reduced backlash gear units" on page 109.

RM gear units, RM gearmotors

RM gear units and RM gearmotors are a special type of helical gear units with an extended output bearing hub. They were designed especially for agitating applications and allow for high overhung and axial loads and bending moments. The other data are the same as for standard helical gear units and standard helical gearmotors.

SPIROPLAN® right-angle gearmotors

SPIROPLAN® right-angle gearmotors are robust, single- and two-stage right-angle gearmotors with SPIROPLAN® gearing. The difference to the helical-worm gear units is the material combination of the steel-on-steel gearing, the special tooth meshing relationships and the aluminum housing. As a result, SPIROPLAN® right-angle gearmotors are wear-free, very quiet and light.

The particularly short design and the aluminum housing make for very compact and lightweight drive solutions.

The wear-free gearing and the life-long lubrication facilitate long periods of maintenance-free operation. The oil filling being independent of the mounting position (except for SPRIOPLAN® W..37 in mounting position M4) makes any position possible for SPRIOPLAN® right-angle gearmotors without altering the quantity of oil. Identical hole spacing in the foot and face, as well as the equal shaft height to both, provides you with diverse mounting options.

Two different flange diameters are available. On request, SPIROPLAN® right-angle gearmotors can be equipped with a torque arm.

Input components

The following components on the input side are available for the gear units from SEW-EURODRIVE:

- **Input covers with input shaft extension, optionally with**
  - Centering shoulder
  - Backstop
  - Motor mounting platform
- **Adapter**
  - For mounting IEC or NEMA motors with the option of a backstop
  - For mounting servomotors with a square flange
  - With torque limiting safety couplings and speed or slip monitor
  - With hydraulic centrifugal coupling, also with disk brake or backstop

Swing base

A swing base is a drive unit consisting of helical-bevel gear unit, hydraulic centrifugal coupling and electric motor. The complete arrangement is mounted to a rigid mounting rail.

Motor swings are available with the following optional accessories:

- Torque arm
- Mechanical thermal monitoring unit
- Contactless thermal monitoring unit

2.5 General product description BS.F, PS.F, PS.C gear units

Ambient temperature

Servo gear units can be operated at ambient temperatures between - 20 C and + 40 C. It is essential that you contact SEW-EURODRIVE if ambient temperatures exceed this temperature range.

Installation altitude

Due to the low air density at high installation altitudes, heat dissipation on the surface of motors and gear units decreases. The rated data listed in the catalog/price catalog applies to an installation altitude of maximum 1000 m above sea level. Installation altitudes of more than 1000 m asl must be taken into account for project planning of gear units and gearmotors.

Power and torque

The power and torque values listed in the catalogs apply to normal environmental conditions.

Please note that the motor torques shown in the selection tables for gearmotors is subject to selection. However, the output torque and the desired output speed are essential for the application and need to be checked.

Noise levels

The noise levels of all SEW servo gearmotors and servomotors are well within the maximum permitted noise levels laid down by the VDI guideline 2159 for gear units and EN 60034 for motors.

Heat dissipation and accessibility

Servo gearmotors and brakes can reach surface temperatures > 100 °C during operation. Make sure to maintain adequate distance from heat-sensitive components when installing gearmotors/geared brakemotors to the driven machine.

Direct motor mounting

The servo gearmotors from SEW-EURODRIVE make it possible to mount servo gear units directly to the synchronous servomotors from SEW-EURODRIVE without an adapter. These integrated servo gearmotors feature shaft-hub connections that are all positive and free from backlash.

Motor mounting with adapter

Use the modular motor adapters to connect all other commercial servomotors in a simple and time-efficient manner to the servo gear units from SEW-EURODRIVE.

Low backlash and positioning accuracy

BS.F and PS.F gear units ensure low backlash already for standard designs. The circumferential backlash can be further reduced for all types and even minimized for PS.F gear units. Circumferential backlash will remain constantly low for the entire gear unit life due to the wear-free operating performance and high-endurance design of the running gears.

The circumferential backlash is specified in angular minutes ['] in the technical data. The circumferential backlash for the output shaft is specified without load (max. 1% of the rated output torque); the gear unit input end is blocked. The dimension sheets for standard versions are applicable.

Extensive ratio range with fine graduation

All ratios from i=3 to i=100 are integers and finely graduated. This means that the gear units are especially suitable for use with controllers that require integer resolution ratios.

Reliability, long service life and low maintenance

The high reliability of servo gear units from SEW-EURODRIVE in the system is ensured by the use of high-strength materials, high-quality rolling bearings, long-lived oil seals and synthetic lubricants.

High overload capacity

Exactly matched components as well as backlash-free and positively connected drive elements ensure that highest torques can be transferred and that large axial and radial forces can be absorbed.

Torsionally rigid

The special design of SEW-EURODRIVE servo gear units in conjunction with large shaft diameters ensures high torsional rigidity.

2.6 Explosion protection according to ATEX

Validity

EU directive 94/9/EC or ATEX lays down new regulations for explosion protection in all types of devices for the European market. This directive applies to gearmotors and motors as well. Since July 1, 2003, EU directive 94/9/EC has been applicable without restrictions to the use of gearmotors and motors within the European Union. Other European countries, such as Switzerland, have fallen in with this regulation since.

Scope

SEW-EURODRIVE now only supplies explosion-proof gear units in accordance with the corresponding ATEX directive. This also applies to options and accessories in explosion-proof design.

Depending on their features and dimensions, explosion-proof gear units are suitable for:

- Potentially explosive gas atmosphere, zone 1 or 2.
- Potentially explosive dust atmosphere, zone 21 or 22.

SEW-EURODRIVE offers gearmotors and motors of categories

- II2G
- II2D
- II3GD
- II3D

for use in zones 1, 21, 2 and 22.

Stand-alone gear units with components on the input side are available in the following categories:

- Gear units with adapters AQA, EBH, and EPH for use in zones 1, 21, 2 and 22
  - II2GD

Adapters AQH according to ATEX directive are not available.

Other documentation

The "Explosion-Proof Drives to EU Directive 94/9/EC" system description and the volume of the same name in the "Drive Engineering – Practical Implementation" series provide you with basic information about this topic.

Please refer to the "Explosion-Proof Drives" catalog and the "Variable Speed Gearmotors" catalog for detailed information on explosion-proof products from SEW-EURODRIVE.

3 Overview of Types and Unit Designation

3.1 Types and options of R, F, K, S, W gear units

Below an overview of unit designations for R, F, K, S, and W gear units and their options.

Helical gear units

Designation	
RX..	Single-stage foot-mounted type
RXF..	Single-stage B5 flange-mounted type
R..	Foot-mounted type
R..F	Foot and B5-flange mounted type
RF..	B5 flange-mounted type
RZ..	B14 flange-mounted type
RM..	B5 flange-mounted type with extended bearing hub

Parallel shaft helical gear units

Designation	
F..	Foot-mounted type
FA..B	Foot-mounted, hollow shaft
FH..B	Foot-mounted, hollow shaft with shrink disk
FV..B	Foot-mounted, hollow shaft with splined hollow shaft to DIN 5480
FF..	B5 flange-mounted type
FAF..	B5 flange-mounted type and hollow shaft
FHF..	B5 flange-mounted type and hollow shaft with shrink disk
FVF..	B5 flange-mounted type and hollow shaft with splined hollow shaft to DIN 5480
FA..	Hollow shaft
FH..	Hollow shaft with shrink disk
FT..	Hollow shaft with TorqLOC® hollow shaft mounting system
FV..	Hollow shaft with splining to DIN 5480
FAZ..	B14 flange-mounted type and hollow shaft
FHZ..	B14 flange-mounted type and hollow shaft with shrink disk
FVZ..	B14 flange-mounted type and hollow shaft with splined hollow shaft to DIN 5480

Helical-bevel gear units

Designation	
K..	Foot-mounted
KA..B	Foot-mounted, hollow shaft
KH..B	Foot-mounted, hollow shaft with shrink disk
KV..B	Foot-mounted, hollow shaft with splined hollow shaft to DIN 5480
KF..	B5 flange-mounted
KAF..	B5 flange-mounted type and hollow shaft
KHF..	B5 flange-mounted type and hollow shaft with shrink disk
KVF..	B5 flange-mounted type and hollow shaft with splined hollow shaft to DIN 5480
KA..	Hollow shaft
KH..	Hollow shaft with shrink disk
KT..	Hollow shaft with TorqLOC® hollow shaft mounting system
KV..	Hollow shaft with splining to DIN 5480
KAZ..	B14 flange-mounted type and hollow shaft
KHZ..	B14 flange-mounted type and hollow shaft with shrink disk
KVZ..	B14 flange-mounted type and hollow shaft with splined hollow shaft to DIN 5480

Helical-worm gear unit

Designation	
S..	Foot-mounted
SF..	B5 flange-mounted
SAF..	B5 flange-mounted type and hollow shaft
SHF..	B5 flange-mounted type and hollow shaft with shrink disk
SA..	Hollow shaft
SH..	Hollow shaft with shrink disk
ST..	Hollow shaft with TorqLOC® hollow shaft mounting system
SAZ..	B14 flange-mounted type and hollow shaft
SHZ..	B14 flange-mounted type and hollow shaft with shrink disk

SPIROPLAN® gear units

Designation	
W..	Foot-mounted
WF..	Flange-mounted type
WAF..	Flange-mounted type and hollow shaft
WA..	Hollow shaft
WA..B	Foot-mounted, hollow shaft
WH..B	Foot-mounted, hollow shaft with shrink disk
WHF..	Flange-mounted, hollow shaft with shrink disk
WH..	Hollow shaft with shrink disk
WT..	Hollow shaft with TorqLOC® hollow shaft mounting system

Options

R, F and K gear units:

Designation	
/R	Reduced backlash

K, S and W gear units:

Designation	
/T	With torque arm

F gear units:

Designation	
/G	With rubber buffer

Condition monitoring

Designation	Option
/DUO	Diagnostic Unit Oil = Oil aging sensor
/DUV	Diagnostic Unit Vibration = Vibration sensor

	INFORMATION
	The types described in this section refer to CMP gearmotors from SEW-EURODRIVE. They also apply to gear units without motors.

Helical gearmotors

The following types of helical gearmotors are available:

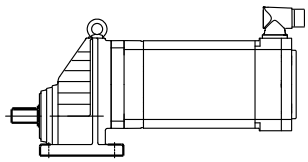
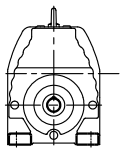

RX.. CMP..
Foot-mounted single stage helical gear unit

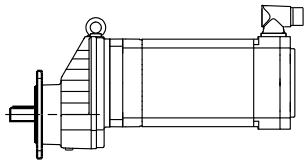
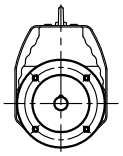

RXF.. CMP..
Single-stage helical gearmotor in B5 flange-mounted design

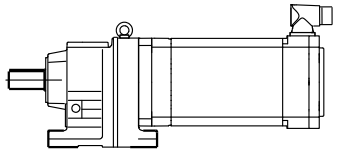
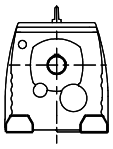

R.. CMP..
Foot-mounted helical gearmotor

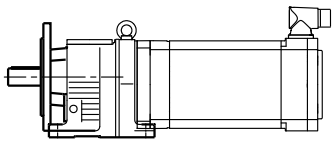
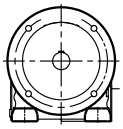

R..F CMP..
Foot and B5 flange-mounted helical gearmotor

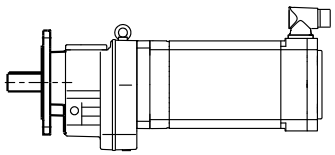
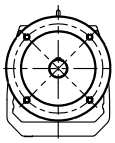

RF.. CMP..
B5 flange-mounted helical gearmotor

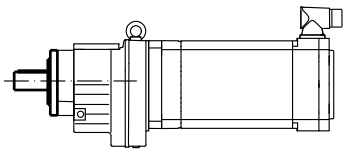
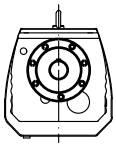

RZ.. CMP..
B14 flange-mounted helical gearmotor

63260AXX

Parallel shaft helical gearmotors

The following types of parallel shaft helical gearmotors is available:

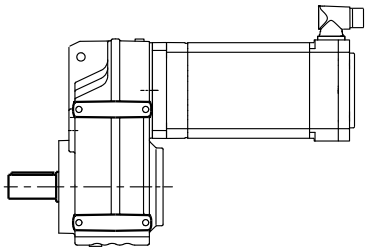

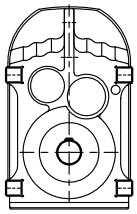

F.. CMP..
Foot-mounted parallel shaft helical gearmotor

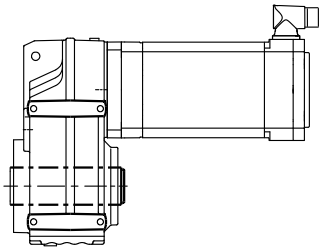

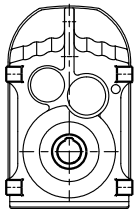

FA..B CMP..
Foot-mounted parallel shaft helical gearmotor with hollow shaft

FV..B CMP..
Foot-mounted parallel shaft gearmotor with hollow shaft and splining according to DIN 5480

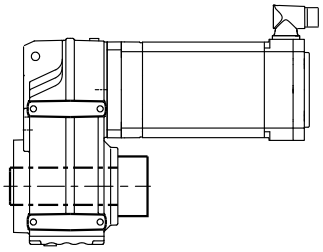

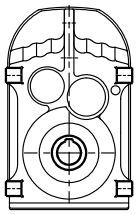

FH..B CMP..
Foot-mounted parallel shaft helical gearmotor with hollow shaft and shrink disk

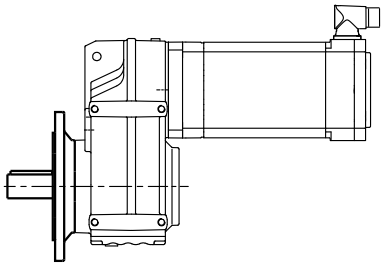

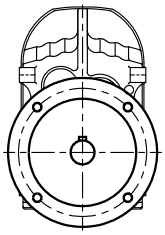

FF.. CMP..
B5 flange-mounted parallel shaft helical gearmotor

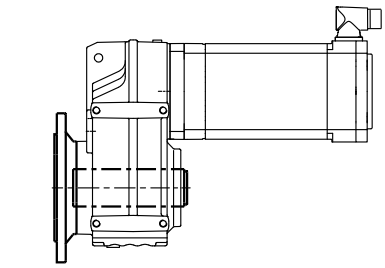

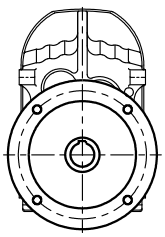

FAF.. CMP..
Parallel shaft helical gearmotor in B5 flange-mounted design with hollow shaft

FVF.. CMP..
Parallel shaft helical gearmotor in B5 flange-mounted design with hollow shaft and splining according to DIN 5480

63261AXX

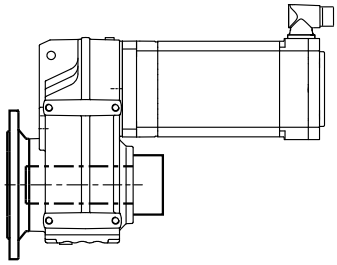
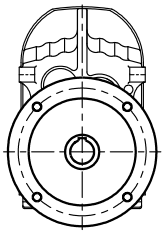

FHF.. CMP..
B5 flange-mounted parallel shaft helical gearmotor with hollow shaft and shrink disk

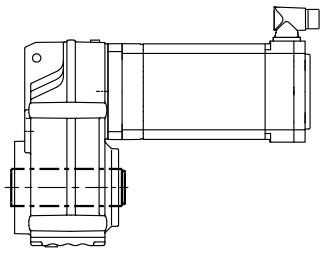
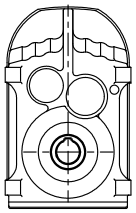

FA.. CMP..
Parallel shaft helical gearmotor with hollow shaft

FV.. CMP..
Parallel shaft helical gearmotor with hollow shaft and splining according to DIN 5480

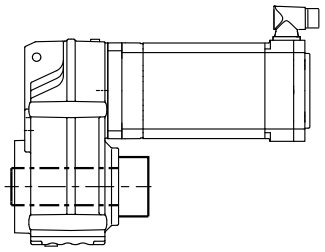
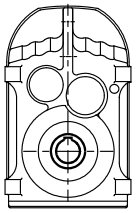

FH.. CMP..
Parallel shaft helical gearmotor with hollow shaft and shrink disk

FT.. CMP..
Parallel shaft helical gearmotor with hollow shaft and TorqLOC® hollow shaft mounting system

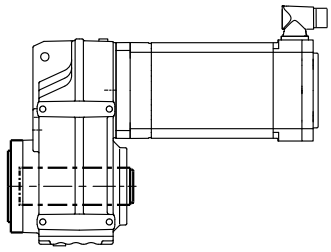
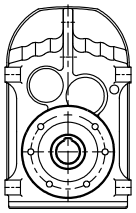

FAZ.. CMP..
B14 flange-mounted parallel shaft helical gearmotor with hollow shaft

FVZ.. CMP..
B14 flange-mounted parallel shaft helical gearmotor in B14 with hollow shaft and splining according to DIN 5480

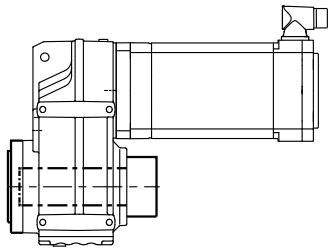
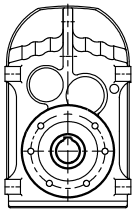

FHZ.. CMP..
B14 flange-mounted parallel shaft helical gearmotor with hollow shaft and shrink disk

63262AXX

Helical-bevel gearmotors

The following types of helical-bevel gearmotors are available:

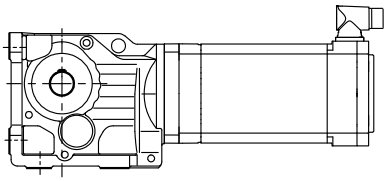
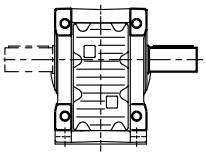

K.. CMP..
Foot-mounted helical-bevel gearmotor

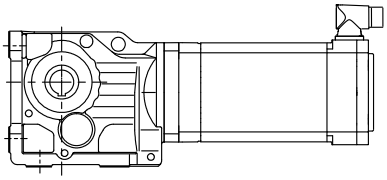
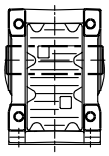

KA..B CMP..
Foot-mounted helical-bevel gearmotor with hollow shaft

KV..B CMP..
Foot-mounted helical-bevel gearmotor with hollow shaft and splining according to DIN 5480

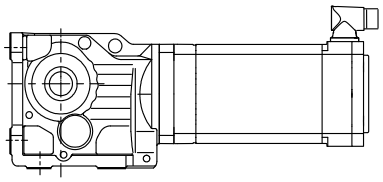
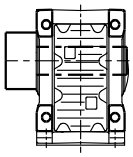

KH..B CMP..
Foot-mounted helical-bevel gearmotor with hollow shaft and shrink disk

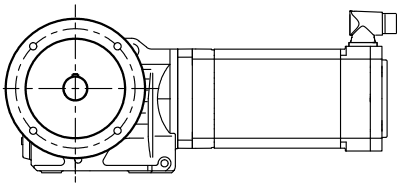
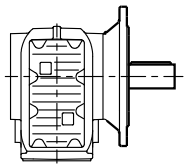

KF.. CMP..
B5 flange-mounted helical-bevel gearmotor

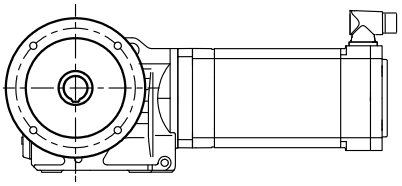
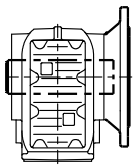

KAF.. CMP..
B5 flange-mounted helical-bevel gearmotor with hollow shaft

KVF.. CMP..
B5 flange-mounted helical-bevel gearmotor with hollow shaft and splined hollow shaft to DIN 5480

63263AXX

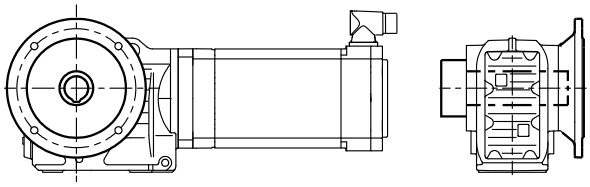

KHF.. CMP..
B5 flange-mounted helical-bevel gearmotor with hollow shaft and shrink disk

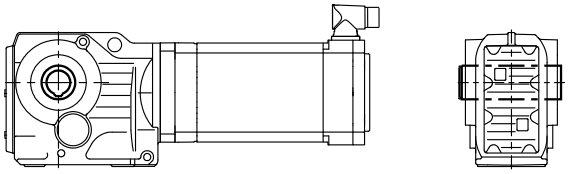

KA.. CMP..
Helical-bevel gearmotor with hollow shaft

KV.. CMP..
Helical-bevel gearmotor with hollow shaft and splined hollow shaft to DIN 5480

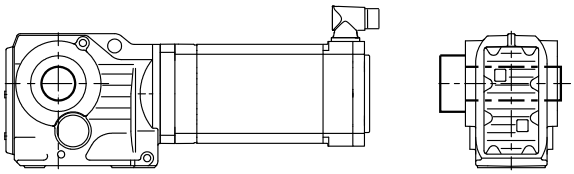

KH.. CMP..
Helical-bevel gearmotor with hollow shaft and shrink disk

KT.. CMP..
Helical-bevel gearmotor with hollow shaft and TorqLOC® hollow shaft mounting system

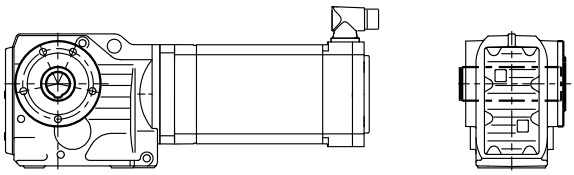

KAZ.. CMP..
B14 flange-mounted helical-bevel gearmotor with hollow shaft

KVZ.. CMP..
B14 flange-mounted helical-bevel gearmotor with hollow shaft and splined hollow shaft to DIN 5480

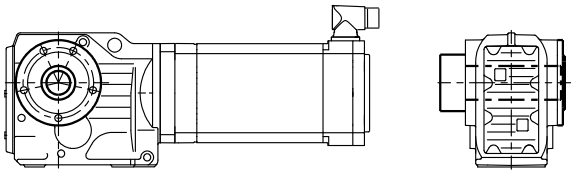

KHZ.. CMP..
B14 flange-mounted helical-bevel gearmotor with hollow shaft and shrink disk

63264AXX

Helical-worm gearmotors

The following types of helical-worm gearmotors are available:

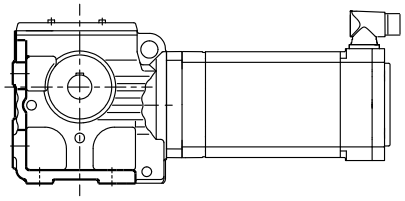
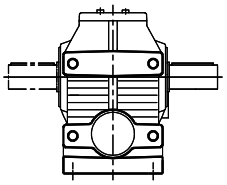

S.. CMP..
Foot-mounted helical-worm gearmotor

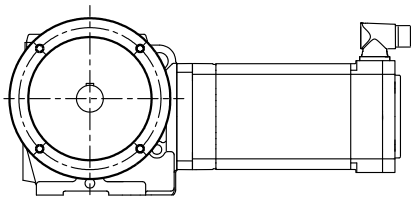
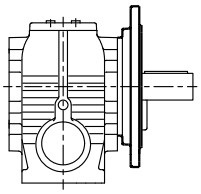

SF.. CMP..
B5 flange-mounted helical-worm gearmotor

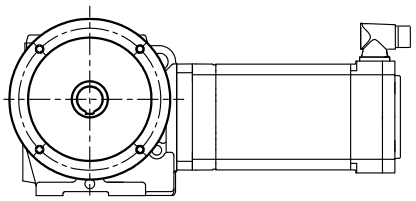
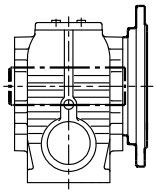

SAF.. CMP..
B5 flange-mounted helical-worm gearmotor with hollow shaft

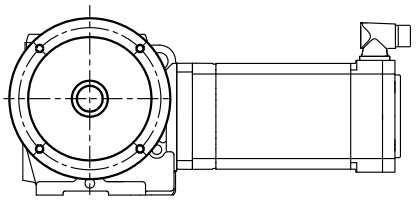
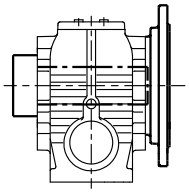

SHF.. CMP..
B5 flange-mounted helical-worm gearmotor with hollow shaft and shrink disk

63265AXX

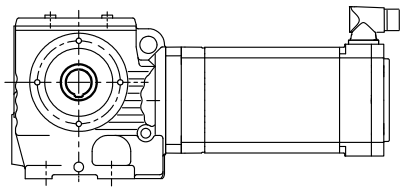

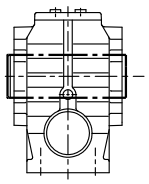

SA.. CMP..
Helical-worm gearmotor with hollow shaft

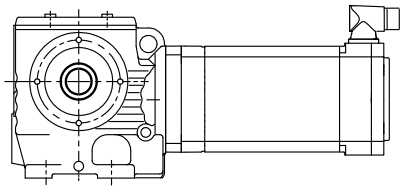

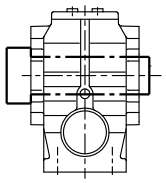

SH.. CMP..
Helical-worm gearmotor with hollow shaft and shrink disk

ST.. CMP..
Helical-worm gearmotor with hollow shaft and TorqLOC® hollow shaft mounting system

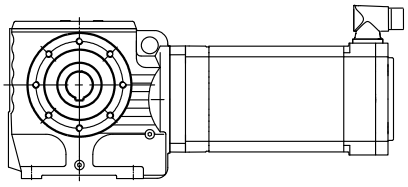

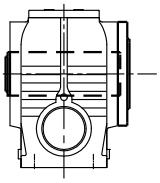

SAZ.. CMP..
B14 flange-mounted helical-worm gearmotor with hollow shaft

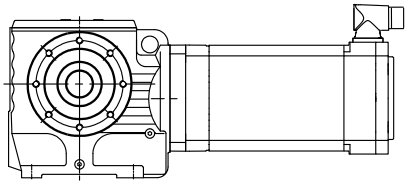

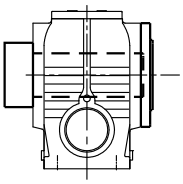

SHZ.. CMP..
B14 flange-mounted helical-worm gearmotor with hollow shaft and shrink disk

63266AXX

SPIROPLAN® gearmotors

The following types of SPIROPLAN® gearmotors are available:

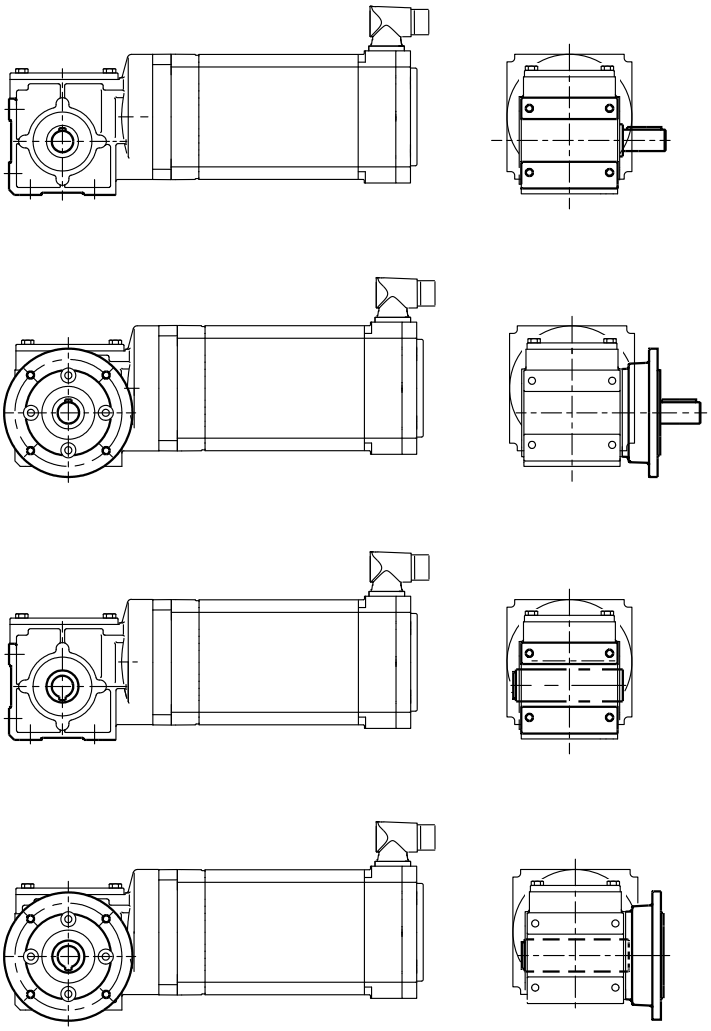

W.. CMP..
Foot-mounted SPRIOPLAN® gearmotor

WF.. CMP..
Flange-mounted SPIROPLAN® gearmotor

WA.. CMP..
SPIROPLAN® gearmotor with hollow shaft

WAF.. CMP..
Flange-mounted SPIROPLAN® gearmotor with hollow shaft

663267AXX

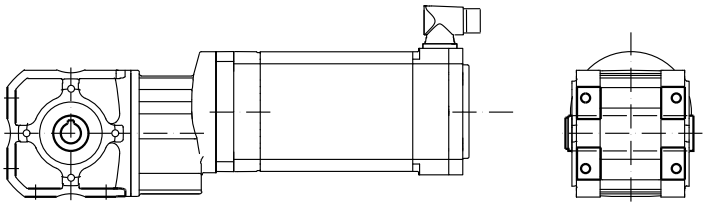

WA..B CMP..
Foot-mounted SPIROPLAN® gearmotor with hollow shaft

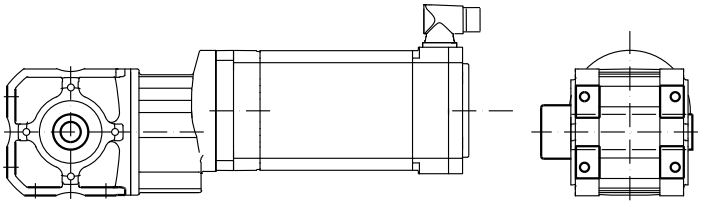

WH..B CMP..
Foot-mounted SPIROPLAN® gearmotor with hollow shaft and shrink disk

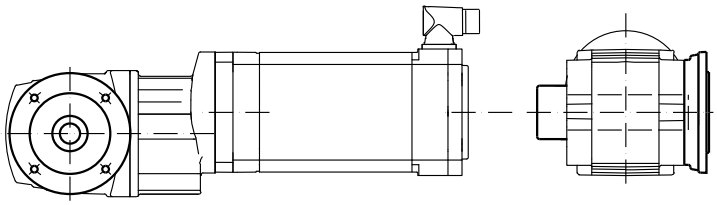

WHF.. CMP..
Flange-mounted SPIROPLAN® gearmotor with hollow shaft and shrink disk

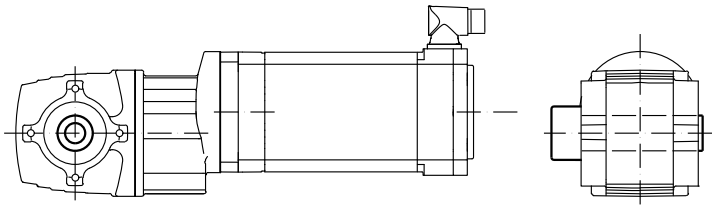

WH.. CMP..
SPIROPLAN® gearmotor with hollow shaft and shrink disk

WT.. CMP..
SPIROPLAN® gearmotor with hollow shaft and TorqLOC®

63268AXX

3.2 Types and options of BS.F, PS.F and PS.C gear units

Bs.F helical-bevel gear units

Designation	
BSF..	Solid shaft without key
BSKF..	Solid shaft with key
BSBF..	Solid shaft with flange block shaft
BSHF..	Hollow shaft with shrink disk
BSAF..	Hollow shaft with keyway
BSKF..B	Solid shaft with key and foot/front-end mounting
BSBF..B	Solid shaft with flange block shaft and foot/front-end mounting
BSHF..B	Hollow shaft with shrink disk and foot/front-end mounting
BSAF..B	Hollow shaft with keyway and foot/front-end mounting

PS.F planetary gear units

Designation	
PSF..	Solid shaft without key
PSKF..	Solid shaft with key
PSBF..	Solid shaft with flange block shaft

PS.C planetary gear units

Designation	
PSC..	Solid shaft without key
PSKC..	B5 output flange, solid shaft with key
PSCZ..	B14 output flange, solid shaft
PSKCZ..	B14 output flange, solid shaft with key

Options

BS.F gear units

Designation	
../R	Reduced backlash
../T	Torque arm
../I	Hollow shaft and shrink disk at the output end

PS.F gear units

Designation	
../R	Reduced backlash
../M	Minimized backlash

BS.F helical-bevel gearmotors

The following types of BS.F helical-bevel gear units are available:

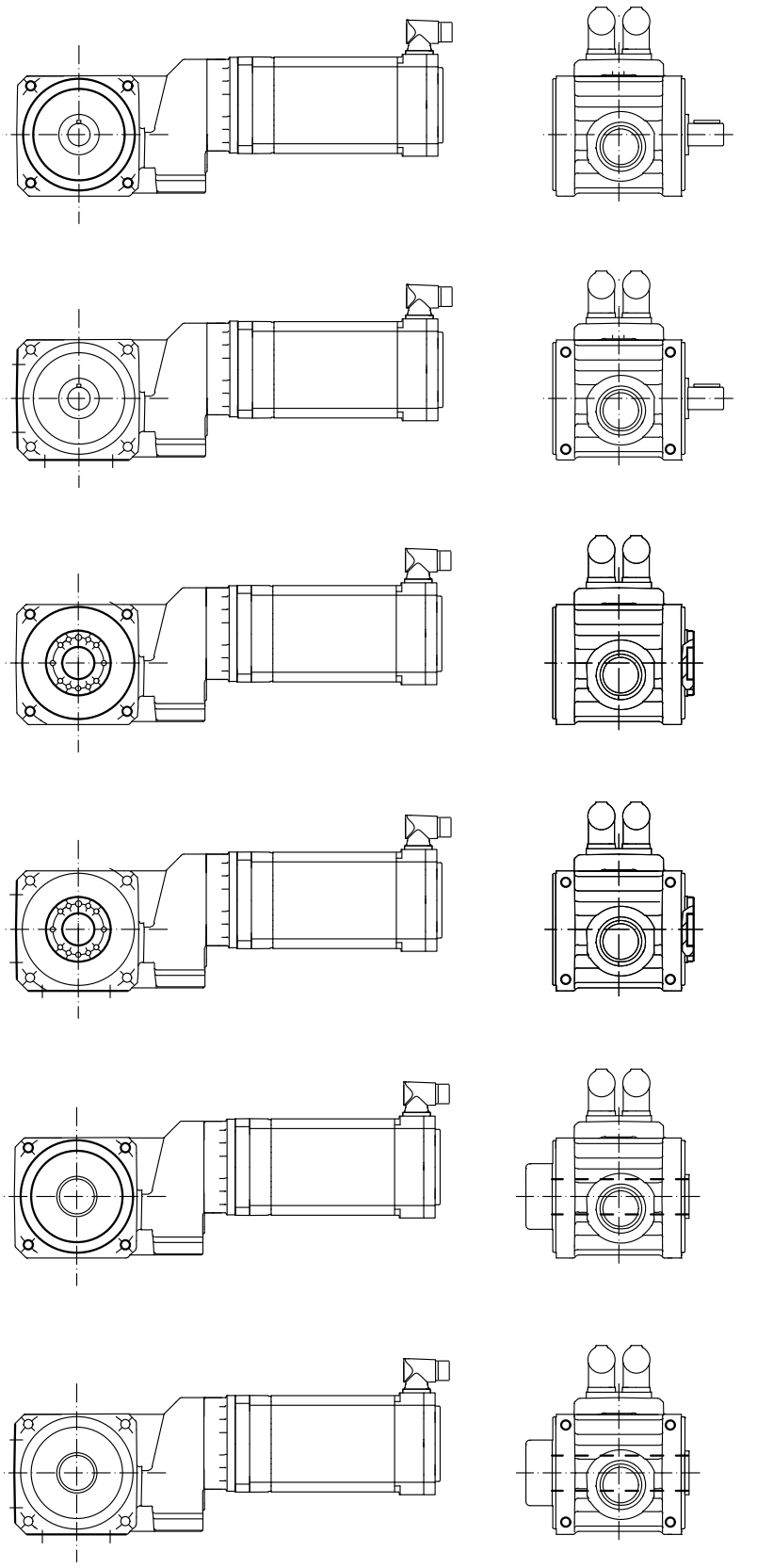

BSF.. CMP..
Gearmotor with solid shaft, B5 output flange

BSKF.. CMP..
Gearmotor with solid shaft and key, B5 output flange

BSF..B CMP..
Gearmotor with solid shaft and front-end mounting

BSKF..B CMP..
Gearmotor with solid shaft, key and front-end mounting

BSBF.. CMP..
Gearmotor with flange block shaft, B5 output flange

BSBF..B CMP..
Gearmotor with flange block shaft and front-end mounting

BSHF.. CMP..
Gearmotor with hollow shaft and shrink disk, B5 output flange

BSHF..B CMP..
Gearmotor with hollow shaft, shrink disk and front-end mounting

63269AXX

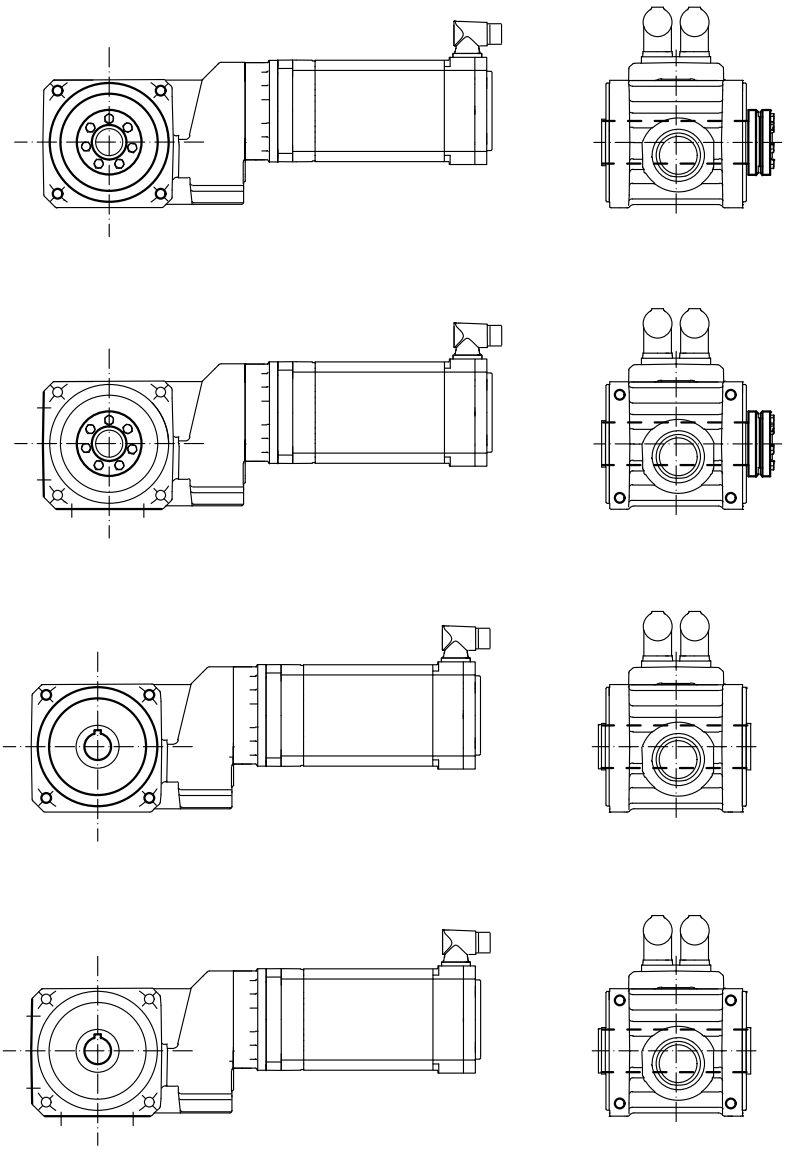

BSHF../I CMP..
Gearmotor with hollow shaft and shrink disk at the output end

BSHF..B /I CMP..
Gearmotor with hollow shaft and shrink disk at the output end

BSAF.. CMP..
Gearmotor with hollow shaft and keyway, B5 output flange

BSAF..B CMP..
Gearmotor with hollow shaft and keyway, B5 output flange

63289AXX

PS.F planetary gearmotors

The following PS.F.. planetary gearmotor types are available:

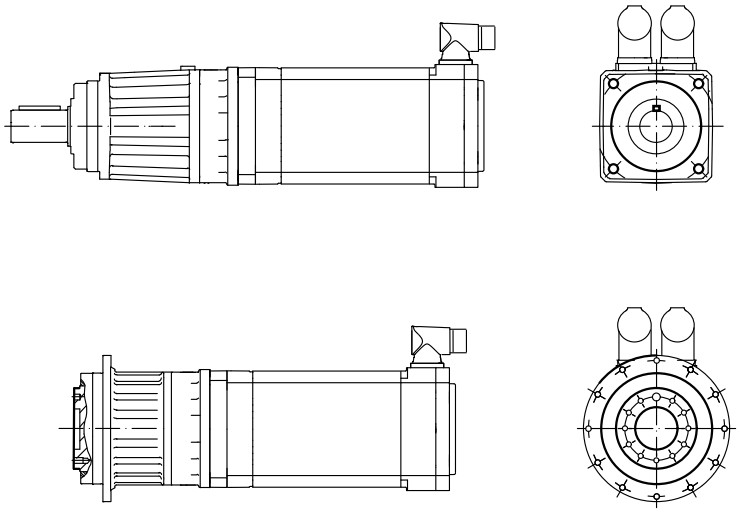

PSF.. CMP..
Gearmotor with solid shaft, B5 output flange

PSKF.. CMP..
Gearmotor with solid shaft and key, B5 output flange

PSBF.. CMP..
Gearmotor with flange block shaft, B5 output flange

63271AXX

PS.C planetary gearmotors

The following types of PS.C.. planetary gear units are available:

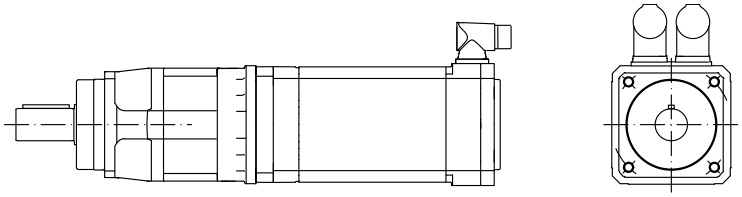

PSC.. CMP..
Gearmotor with solid shaft, B5 output flange

PSKC.. CMP..
Gearmotor with solid shaft and key, B5 output flange

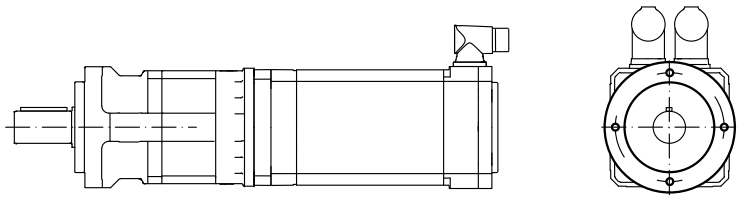

PSCZ.. CMP..
Gearmotor with solid shaft, B14 output flange

PSKCZ.. CMP..
Gearmotor with solid shaft and key, B14 output flange

63270AXX

3.3 Type designations of servo gearmotors

Example: Order code for PS.C.. servo gearmotors

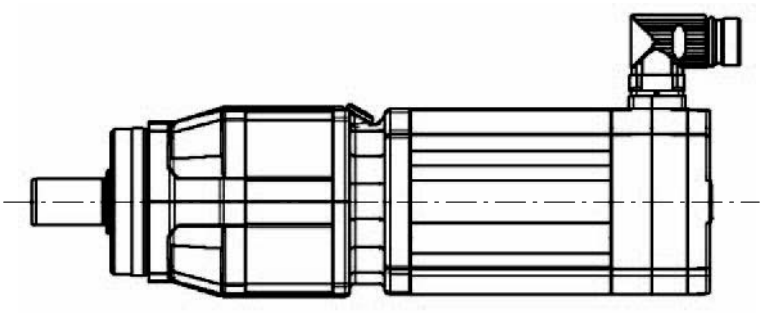

62824axx

For example, a servo gearmotor with brake, manual brake release, positive temperature coefficient thermistor and plug connector has the following type designation:

PSC	321	CMP	50M	/BP	/KTY	/AS1H	/SB1

- /SB1: Plug connector for motor and brake, plug housing with axial encoder cable entry
- /AS1H: Motor option: Absolute encoder multi-turn
- /KTY: Temperature sensor
- /BP: Brake
- 50M: Motor size
- CMP: Motor series
- 321: Gear unit size: e.g. 321
- PSC: Gear unit type: PSC

3.4 Nameplate for servo gearmotors

Example: Nameplate for PS.C.. servo gearmotors

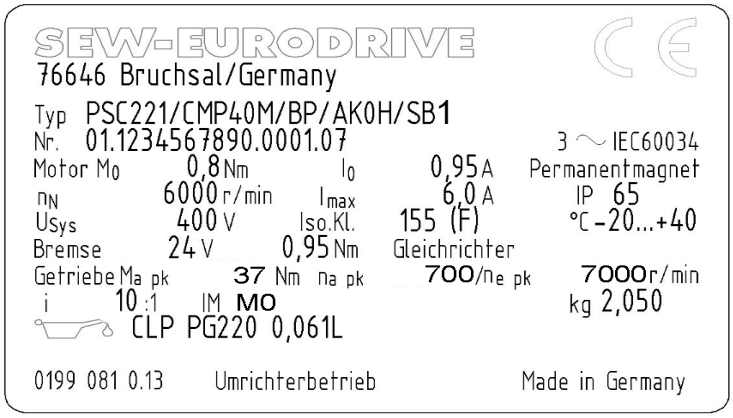

62865ade

Key

i		Gear unit reduction ratio	n_N	[rpm]	Rated speed
IM		Mounting position	M_o	[Nm]	Rated torque
IP		Degree of protection	I_o	[A]	Rated current
n_{epk}	[rpm]	Maximum permitted input speed	I_{max}	[A]	Maximum permitted current
n_{apk}	[rpm]	Maximum permitted output speed	f_N	[Hz]	Rated frequency
M_{apk}	[Nm]	Maximum permitted output torque	U_{max}	[V]	Maximum permitted voltage

	INFORMATION
	The nameplate of servo gearmotors is fixed to the servomotor.

3.5 Overview of servo gearmotors

Axially parallel gear units

Gear unit type For details, refer to		RX.. page 155	R.. page 181	F.. page 256	PS.C.. page 630	PS.F.. page 567
Technical data					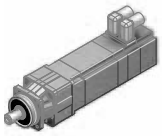	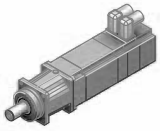
Peak torque	M_{apk} [Nm]	54-1150	46-4360	130-8860	37-427	26-4200
Max. continuous torque	M_{amax} [Nm]	36-830	31-4300	87-7840	29-347	20-3000
Max. input speed	n_{epk} [rpm	Up to 4500	Up to 4500	Up to 4500	Up to 7000	Up to 8000
Peak overhung load	F_{rapk} [N]	3970-30000	1220-32100	4500-65000	2000-11000	1900-83000
Gear ratio range	i	1.3-8.23	3.21-216.28	3.77-276.77	3-100	3-100
Reduced backlash option	/R	x	x	x	-	x
Minimum backlash option	/M	-	-	-	-	x
Mechanical data						
Hollow shaft		-	-	x	-	-
Flange-mounting		x	x	x	x	x
Foot-mounting		x	x	-	-	-
Flange block		-	-	-	-	x
B5 flange		x	x	x	x	x
B14 flange		-	x	x	x	-

Right-angle gear units

Gear unit type For details, refer to		K.. page 354	S.. page 440	W.. page 488	BS.F.. page 502
Technical data				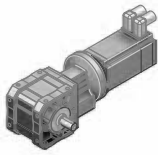	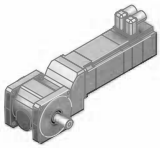
Peak torque	M_{apk} [Nm]	187-9090	60-655	91-270	51-1910
Max. continuous torque	M_{amax} [Nm]	125-8000	43-480	70-180	40-1500
Max. input speed	n_{epk} rpm	4500	4500	4500	4500
Peak overhung load	F_{rapk} [N]	5140-65000	300-12000	2950-7600	2380-36000
Gear ratio range	i	3.98-176.05	6.8-75.06	3.2-74.98	3-40
Reduced backlash option	/R	x	x	-	x
Minimum backlash option	/M	-	-	-	-
Mechanical data					
Hollow shaft		x	x	x	x
Flange-mounting		x	x	x	x
Foot-mounting		x	x	x	x
Flange block		-	-	-	x
B5 flange		x	x	x	x
B14 flange		x	x	-	-

For information on all available options and variants, refer to page 22 et seq.

4 Project Planning Notes for Servo Gearmotors

4.1 Additional documentation

In addition to the information in this publication, SEW-EURODRIVE offers extensive documentation covering the entire topic of electrical drive engineering. These are mainly the publications in the "Drive Engineering Practical Implementation" series as well as the manuals and catalogs for electronically controlled drives.

You will find additional links to a wide selection of our documentation in many languages for download on the SEW-EURODRIVE homepage (http://www.sew-eurodrive.com). The list below includes other documents that are of interest in terms of project planning. You can order these publications from SEW-EURODRIVE.

Technical data for motors and gear units

The following documents are available from SEW-EURODRIVE in addition to this "Synchronous Servo Gearmotors" catalog:

- "Synchronous Servomotors" catalog/price catalog
- "Servo Gear Units" price catalog/catalog
- "Gear Units" price catalog/catalog
- "AC Motors Inverter Assignments and Characteristic Curves" manual

Drive Engineering Practical Implementation

- Project Planning for Drives
- Controlled AC Drives
- SEW encoder systems
- Servo technology
- EMC in Drive Engineering
- Explosion-Proof Drives to EU Directive 94/9/EC
- SEW Disk Brakes

Electronics documentation

- MOVIDRIVE® MDX60/61B system manual
- MOVIAXIS® MX system manual

Mechanical brakes

- "Synchronous Servomotors" catalog/price catalog
- "Brakes and Accessories" manual

4.2 Data for drive and gear unit selection

The data of the application must be known for projecting a drive. The abbreviations used for project planning are summarized in the following table:

Designation	Meaning	Unit
φ	Circumferential backlash	`
η	Gear unit efficiency for M_{apk}	
a, b, f	Gear unit constants as regards the overhung load conversion	mm
c	Gear unit constants as regards the overhung load conversion	Nmm
$\mathbf{a_0}$, $\mathbf{a_1}$, $\mathbf{a_2}$	Gear unit constants as regards the rise in temperature in the gear unit	
$\mathbf{F_A}$	Axial load (tension and compression) on the output shaft	N
$\mathbf{f_k}$	Speed ratio	
$\mathbf{F_R}$	Overhung load on the output shaft	N
$\mathbf{F_{Rapk}}$	Maximum permitted overhung load at the output shaft for short-time duty (load application point is the middle of the shaft end)	N
$\mathbf{F_{Ramax}}$	Maximum permitted overhung load at the output shaft for continuous duty (load application point is the middle of the shaft end)	N
$\mathbf{F_{Repk}}$	Maximum permitted overhung load at the input shaft for short-time duty (load application point is the middle of the shaft end)	N
$\mathbf{F_{Remax}}$	Maximum permitted overhung load at the input shaft for continuous duty (load application point is the middle of the shaft end)	N
H	Installation altitude	m above sea level
$\mathbf{I_0}$	Current consumption of the motor at M_0	A
$\mathbf{I_{max}}$	Maximum permitted motor current (root-mean-square value)	A
Ins. cl.	Thermal classification of the motor	
i	Gear unit reduction ratio	
IM	Mounting position of the gear unit (international mounting position) M1 - M6	
IP..	Degree of protection according to IEC60034-5	
$\mathbf{J_A}$	Mass moment of inertia of the adapter	kgm^2
$\mathbf{J_G}$	Mass moment of inertia of the gear unit	kgm^2
$\mathbf{J_{ext}}$	Mass moment of inertia (external) reduced on motor shaft	kgm^2
$\mathbf{J_{Mot}}$	Mass moment of inertia of the motor	kgm^2
$\mathbf{J_L}$	Mass moment of inertia of the load	kgm^2
k	Inertia ratio J_{ext} / / J_{Mot}	
l	Length of output shaft	mm
$\mathbf{M_1 - M_n}$	Output torque in time period t_1 to t_n	Nm
$\mathbf{M_0}$	Thermally permitted output torque of the motor in continuous duty at low speed (not to be confused with standstill torque)	Nm
$\mathbf{M_a^{DYN}}$	Dynamic output torque assumed for the drive in project planning	Nm
$\mathbf{M_{aeff}}$	Effective torque for component testing calculated in project planning	Nm
$\mathbf{M_{akub}}$	Effective torque for bearing testing calculated in project planning	Nm
$\mathbf{M_{amax}}$	Maximum permitted output torque for continuous duty	Nm
$\mathbf{M_{apk}}$	Maximum permitted torque for short-time duty	Nm
$\mathbf{M_{aNOTAUS}}$	Maximum permitted emergency stop torque, max. 1000 emergency stops	Nm
$\mathbf{M_{ath}}$	Effective torque for thermal testing calculated in project planning	Nm
$\mathbf{M_B}$	Rated brake torque	Nm
$\mathbf{M_{pk}}$	Dynamic limit torque of the servomotor	Nm

Table continued on next page.

Designation	Meaning	Unit
M_{eff}	Effective torque requirement (in relation to the motor)	Nm
M_{max}	Maximum output torque assumed for the drive in project planning	Nm
ML	Mounting location (UL)	
n_{apk}	Maximum permitted output speed for short-time duty	1/min
n_{epk}	Maximum permitted input speed for short-time duty	1/min
n_{em}	Mean input speed	1/min
n_{am}	Mean output speed	1/min
n_{ak}	Breakpoint speed (output)	1/min
n_N	Rated speed	1/min
n_1 - n_n	Output speed in time period t_1 to t_n	1/min
n_{etn_pk}	Maximum input speed in section	1/min
P_{Br}	Braking power	W
P_{Br_pk}	Peak braking power	W
P_{Br_eff}	Effective braking power	W
P_{Br_tn}	Braking power in section t_n	W
S.., ..% cdf	Duty type and cyclic duration factor (cdf) or exact load cycle can be entered.	s
t_1 - t_n	Time period 1 to n	s
t_z	Cycle time	s
T_{Amb}	Ambient temperature	°C
U_{sys}	System voltage, voltage of the supplying inverter	V
U_{Br}	Operating voltage of the brake	V
x	Distance between overhung load application point and shaft shoulder	mm

Determining the application data

It is necessary to have data on the machine to be driven (mass, speed, setting range, etc.) to project the drive correctly.

These data help determine the required power, torque and speed. Refer to the SEW publication "Drive Engineering Practical Implementation / Drive Planning" or the SEW project planning tool SEW Workbench for assistance.

Selecting the correct drive

The appropriate drive can be selected once the power and speed of the drive have been calculated and with regard to mechanical requirements.

4.3 Project planning procedure

The following flowcharts show a schematic view of the project planning procedure of a servo gear unit for a positioning drive in S3 duty cycle.

Project planning procedure part 1, servo gear units

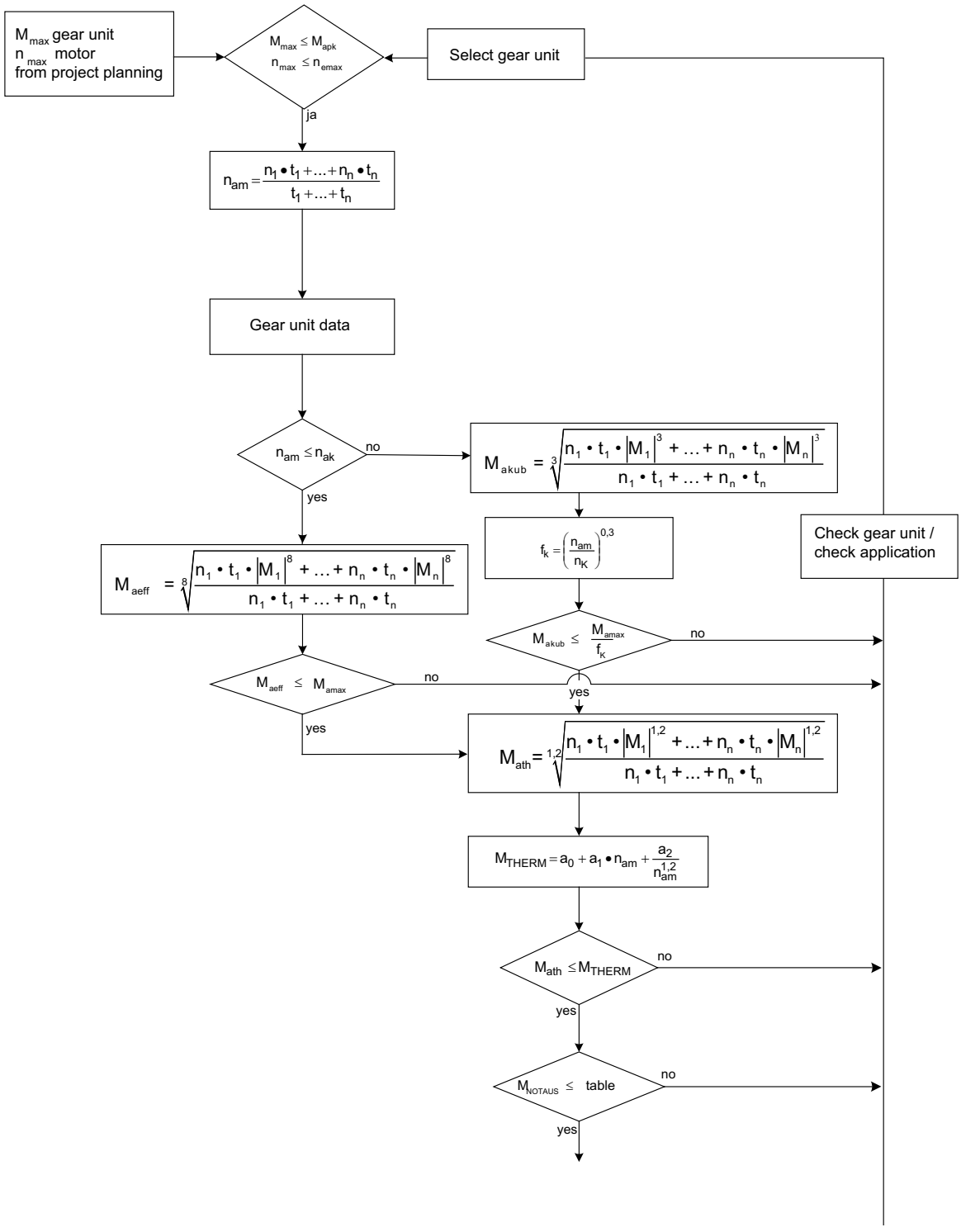

62893aen

* For thermal project planning of R, F, K, S, W gear units, please contact SEW-EURODRIVE.

Project planning procedure part 2, servo gear units

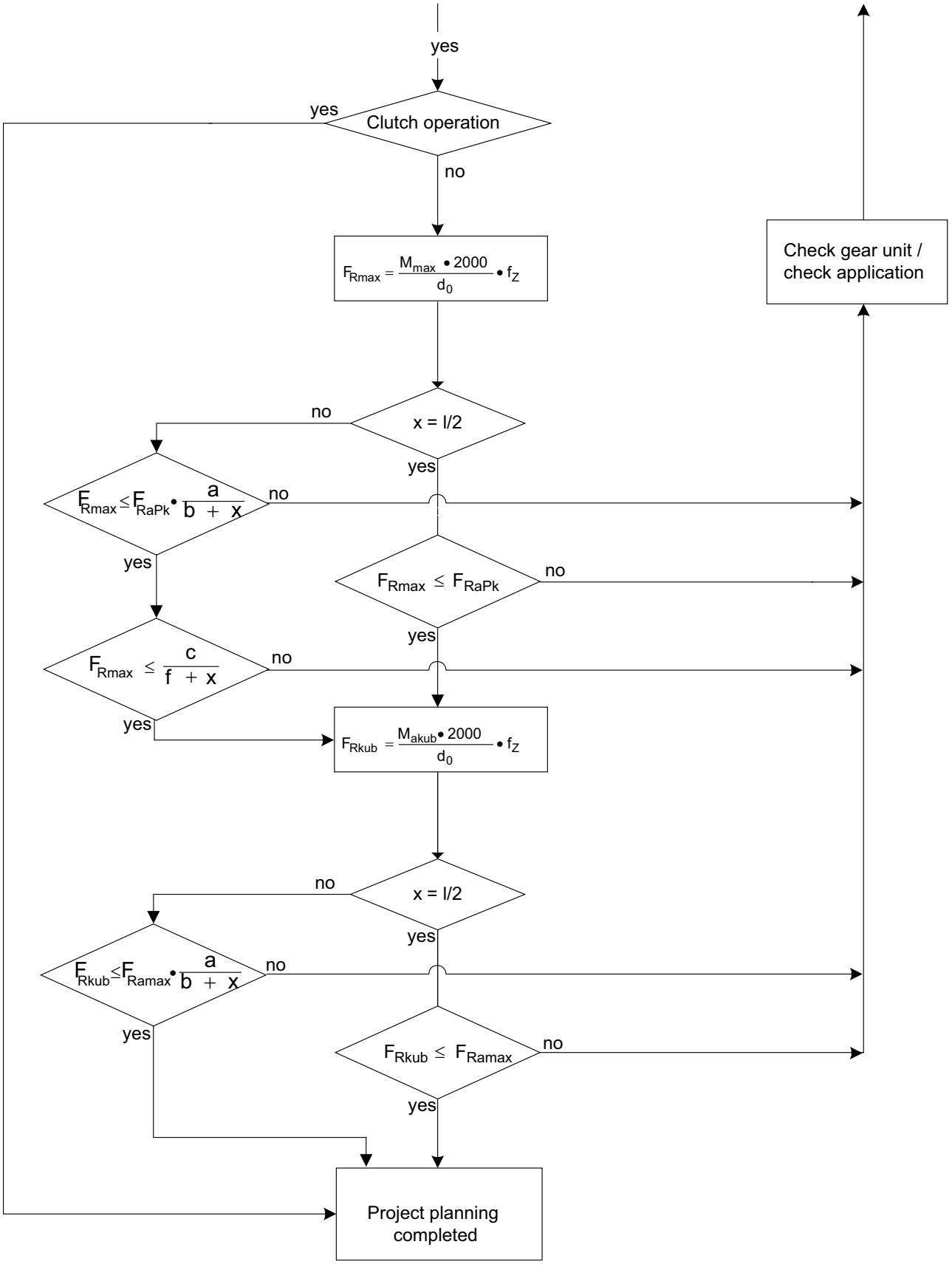

62783aen

Project planning procedure part 3, servomotors

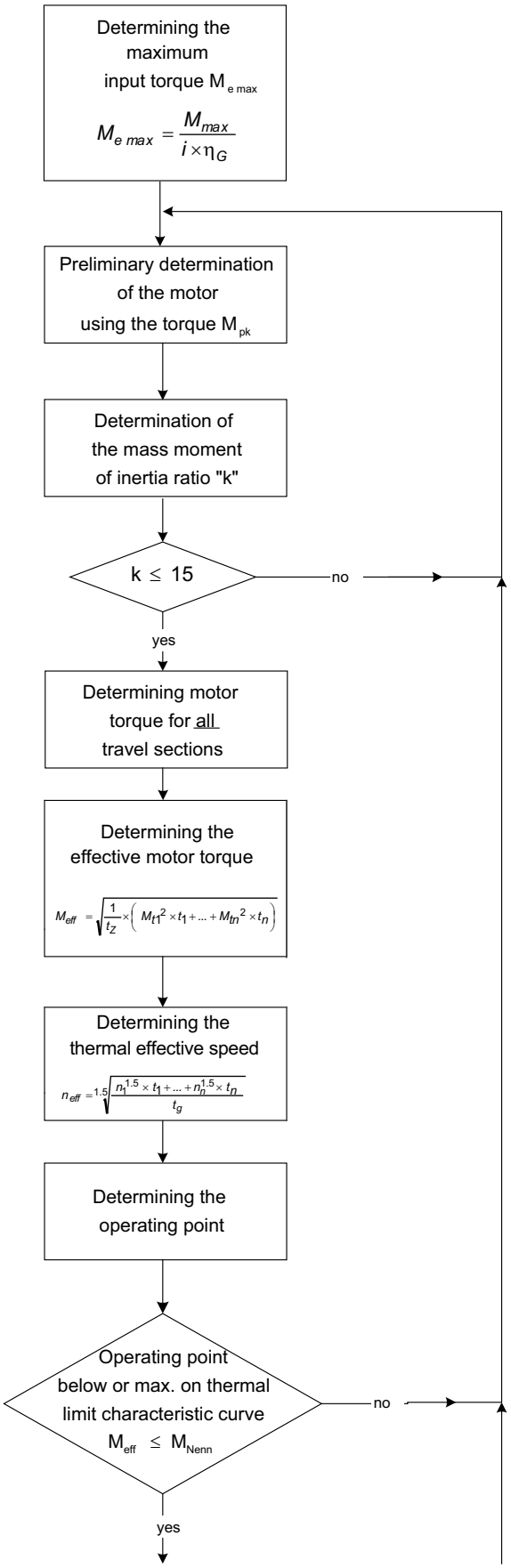

Project planning procedure part 4, servomotors

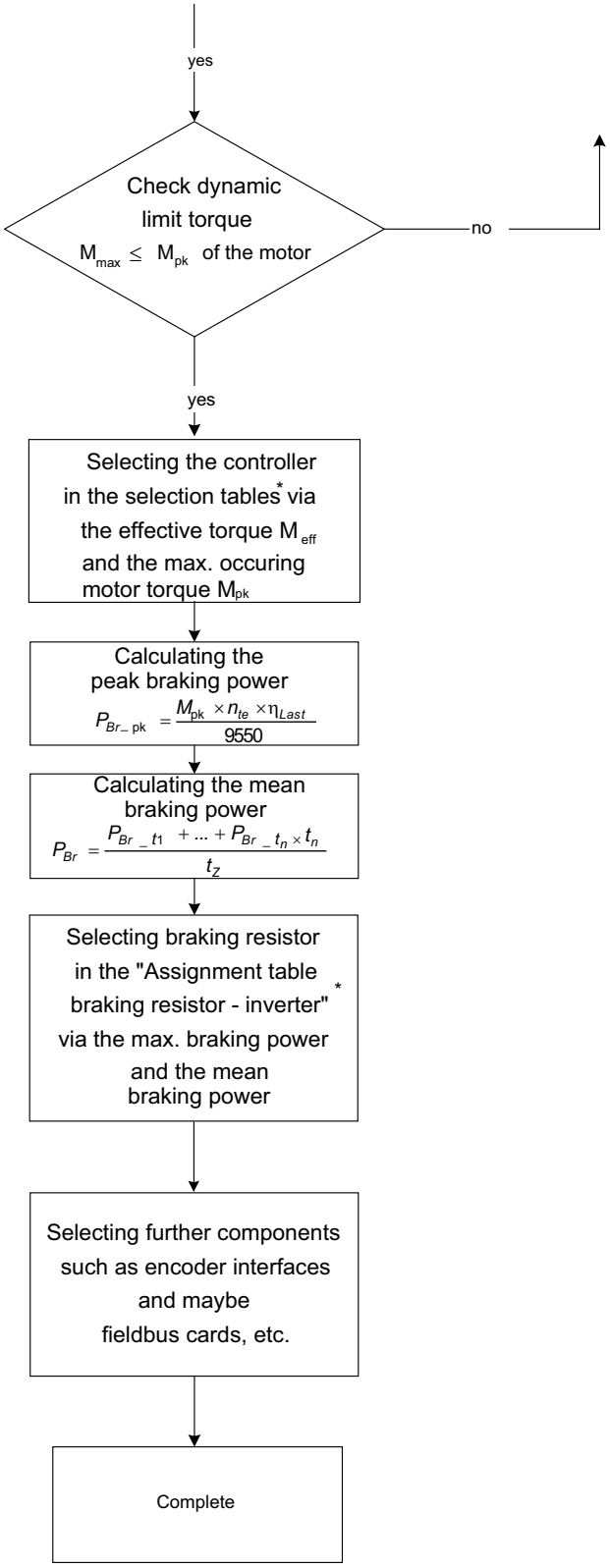

62890aen

* MOVIDRIVE® system manual, MOVIAXIS® system manual

4.4 Project planning notes for R, F, K, S, W gear units

Efficiency of the gear units

General information

The efficiency of gear units is mainly determined by the gearing and bearing friction. Keep in mind that the starting efficiency of a gear unit is always less than its efficiency at operating speed. This applies in particular to helical-worm and SPIROPLAN® right-angle gearmotors.

R, F, K gear units

The efficiency of helical, parallel shaft and helical-bevel gear units varies with the number of gear stages, between 96% (3-stage), 97% (2-stage) and 98 % (1-stage).

S and W gear units

The gearing in helical-worm and SPIROPLAN® gear units produces a high proportion of sliding friction. As a result, these gear units have higher gearing losses than R, F or K gear units and thus be less efficient.

The efficiency depends on the following factors:

- Gear ratio of the helical-worm or SPIROPLAN® stage
- Input speed
- Gear unit temperature

Helical-worm gear units from SEW-EURODRIVE are helical gear/worm combinations that are significantly more efficient than plain worm gear units.

The efficiency may reach $\eta < 0.5$ if the helical-worm gear stage has a very high gear ratio.

SPIROPLAN® gear units W37 and W47 from SEW-EURODRIVE have an efficiency of more than 90%, which drops only slightly even with large gear unit ratios.

Self-locking

Retrodriving torques on helical-worm or SPIROPLAN® gear units produce an efficiency of $\eta' = 2 - 1/\eta$, which is significantly less favorable than the forward efficiency η. Helical-worm or SPIROPLAN® gear units are self-locking if the forward efficiency $\eta \leq 0.5$. Some SPIROPLAN® gear units are dynamically self-locking. Contact SEW-EURODRIVE if you want to make technical use of the braking effect of self-locking characteristics.

	INFORMATION
	Note that the self-locking effect of helical-worm and SPIROPLAN® gear units is not permitted as the sole safety function for hoists.

Run-in phase

The tooth flanks of new helical-worm and SPIROPLAN® gear units are not yet completely smooth. This fact results in a greater friction angle and less efficiency than during later operation. This effect intensifies with increasing gear unit ratio. Subtract the following values from the listed efficiency during the running-in phase:

	Worm	
	i range	**η reduction**
1-start	ca. 50 - 280	ca. 12%
2-start	ca. 20 - 75	ca. 6%
3-start	ca. 20 - 90	ca. 3%
5-start	ca. 6 - 25	ca. 3%
6-start	ca. 7 - 25	ca. 2%

SPIROPLAN® W..	
i range	**η reduction**
ca. 30 - 70	ca. 8%
ca. 10 - 30	ca. 5%
ca. 3 - 10	ca. 3%

The run-in phase usually lasts 48 hours. Helical-worm and SPRIOPLAN® gear units achieve their listed rated efficiency values when:

- The gear unit has been completely run-in,
- The gear unit has reached nominal operating temperature,
- The recommended lubricant has been filled in, and
- The gear unit is operating in the rated load range.

Churning losses

In certain gear unit mounting positions (see chapter "Gear Unit Mounting Positions"), the first gearing stage is completely immersed in the lubricant. When the circumferential velocity of the input stage is high, considerable churning losses occur in larger gear units that must be taken into account. Contact SEW-EURODRIVE if you wish to use gear units of this type.

To reduce churning losses to a minimum, use gear units in M1 mounting position.

Overhung and axial loads

Determining overhung loads

An important factor for determining the resulting overhung load is the type of transmission element mounted to the shaft end. The following transmission element factors f_Z have to be considered for various transmission elements.

Transmission element	Transmission element factor f_Z	Comments
Gears	1.15	< 17 teeth
Chain sprockets	1.40	< 13 teeth
Chain sprockets	1.25	< 20 teeth
Narrow V-belt pulleys	1.75	Influence of the pre-tensioning
Flat belt pulleys	2.50	Influence of the pre-tensioning
Toothed belt pulleys	2.00 - 2.50	Influence of the pre-tensioning
Gear rack pinion, prestressed	2.00	Influence of the pre-tensioning
Gear rack pinion, not prestressed	1.15	< 17 teeth

Permitted overhung load

The basis for determining the permitted overhung loads is the computation of the rated bearing service life L_{10h} of the rolling bearings (according to ISO 281).

For special operating conditions, the permitted overhung loads can be determined with regard to the modified service life L_{na} on request.

INFORMATION

The values refer to force applied to the center of the shaft end (in right-angle gear units as viewed onto drive end). The values for the force application angle α and direction of rotation are based on the most unfavorable conditions.

INFORMATION

Reduction of overhung loads

- Only 50% of the F_{Ramax} and F_{Rapk} values specified in the selection tables are permitted in mounting positions M1 and M3 with wall attachment on the front face for K and S gear units.
- Helical-bevel gearmotors K167 and K187 in mounting positions M1 to M4: A maximum of 50% of the overhung load F_{Ramax} specified in the selection tables in the case of gear unit mounting other than as shown in the mounting position sheets.
- Foot and flange-mounted helical gearmotors (R..F): A maximum of 50% of the overhung load F_{Ramax} specified in the selection tables in the case of torque transmission via the flange mounting.

Higher permitted overhung loads

Exactly considering the force application angle α and the direction of rotation makes it possible to achieve a higher overhung load than listed in the selection tables.

Higher output shaft loads are permitted if heavy duty bearings are installed, especially with R, F and K gear units.

Contact SEW-EURODRIVE in such cases.

Definition of force application point

The force application is defined according to the following figure:

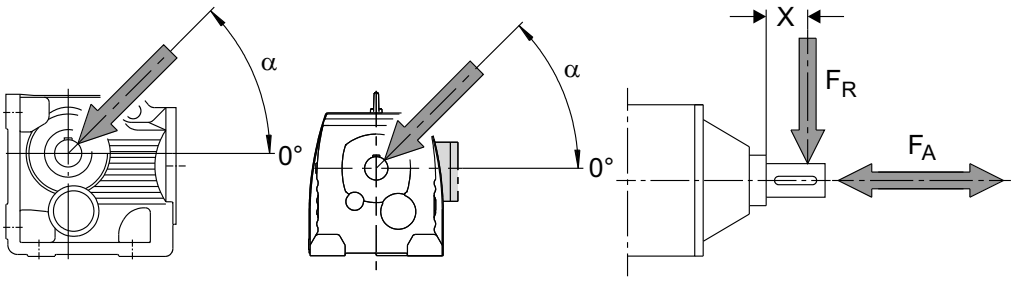

63214axx

Permitted axial loads

If there is no overhung load, then an axial force F_A (tension or compression) amounting to 50% of the overhung load given in the selection tables is permitted. This condition applies to the following gearmotors:

- Helical gearmotors except for R..137... to R..167...
- Parallel shaft and helical-bevel gearmotors with solid shaft except for F97...
- Helical-worm gearmotors with solid shaft

	INFORMATION
	Contact SEW-EURODRIVE for all other types of gear units and in the event of significantly greater axial loads or combinations of overhung load and axial load.

Output end: Overhung load conversion for off-center force application

The permitted overhung loads F_{Ramax} and F_{Rapk} listed in the data tables apply to force application at l / 2 (solid shaft) or for force application at the shaft end face (hollow shaft). If the distance between the force application point an the gear unit is different, the overhung loads must be determined anew according to the project planning procedure page 44 .

The following conditions must be met:

$$F_R \le F_{Ra\max} \cdot \frac{a}{b+x}\ [N] \qquad F_R \le \frac{c}{f+x}\ [N]$$

F_{Ramax} = Permitted overhung load [N]

x = Distance from the shaft shoulder to the force application point in [mm]

a, b, f = Gear unit constant for overhung load conversion [mm]

c = Gear unit constant for overhung load conversion [Nmm]

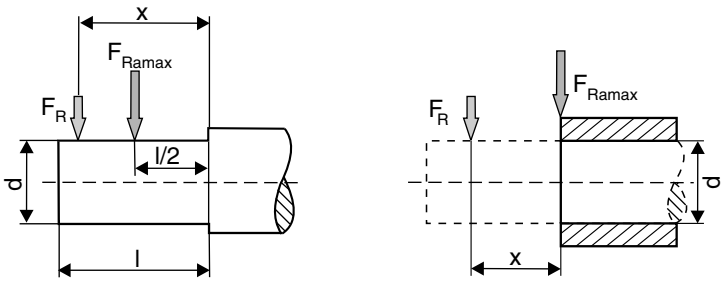

63215axx

Gear unit constants for overhung load conversion

Gear unit type	a mm	b mm	c Nmm	f mm	d mm	l mm
RX57	43.5	23.5	1.51×10^5	34.2	20	40
RX67	52.5	27.5	2.42×10^5	39.7	25	50
RX77	60.5	30.5	1.95×10^5	0	30	60
RX87	73.5	33.5	7.69×10^5	48.9	40	80
RX97	86.5	36.5	1.43×10^6	53.9	50	100
RX107	102.5	42.5	2.47×10^6	62.3	60	120
R07	72.0	52.0	4.67×10^4	11	20	40
R17	88.5	68.5	6.527×10^4	17	20	40
R27	106.5	81.5	1.56×10^5	11.8	25	50
R37	118	93	1.24×10^5	0	25	50
R47	137	107	2.44×10^5	15	30	60
R57	147.5	112.5	3.77×10^5	18	35	70
R67	168.5	133.5	2.65×10^5	0	35	70
R77	173.7	133.7	3.97×10^5	0	40	80
R87	216.7	166.7	8.47×10^5	0	50	100
R97	255.5	195.5	1.06×10^6	0	60	120
R107	285.5	215.5	2.06×10^6	0	70	140
R137	343.5	258.5	4.58×10^6	0	90	170
R147	402	297	8.65×10^6	33	110	210
R167	450	345	1.26×10^7	0	120	210
F27	109.5	84.5	1.13×10^5	0	25	50
F37	123.5	98.5	1.07×10^5	0	25	50
F47	153.5	123.5	1.40×10^5	0	30	60
F57	170.7	135.7	2.70×10^5	0	35	70
F67	181.3	141.3	4.12×10^5	0	40	80
F77	215.8	165.8	7.87×10^5	0	50	100
F87	263	203	1.06×10^6	0	60	120
F97	350	280	2.09×10^6	0	70	140
F107	373.5	288.5	4.23×10^6	0	90	170
F127	442.5	337.5	9.45×10^6	0	110	210
F157	512	407	1.05×10^7	0	120	210
K37	123.5	98.5	1.30×10^5	0	25	50
K47	153.5	123.5	1.40×10^5	0	30	60
K57	169.7	134.7	2.70×10^5	0	35	70
K67	181.3	141.3	4.12×10^5	0	40	80
K77	215.8	165.8	7.69×10^5	0	50	100
K87	252	192	1.64×10^6	0	60	120
K97	319	249	2.80×10^6	0	70	140
K107	373.5	288.5	5.53×10^6	0	90	170
K127	443.5	338.5	8.31×10^6	0	110	210
K157	509	404	1.18×10^7	0	120	210
K167	621.5	496.5	1.88×10^7	0	160	250
K187	720.5	560.5	3.04×10^7	0	190	320
W10	84.8	64.8	3.6×10^4	0	16	40
W20	98.5	78.5	4.4×10^4	0	20	40
W30	109.5	89.5	6.0×10^4	0	20	40
W37	121.1	101.1	$6.95 \xi 10^4$	0	20	40
W47	145.5	115.5	4.26×10^5	35.6	30	60
S37	118.5	98.5	6.0×10^4	0	20	40
S47	130	105	1.33×10^5	0	25	50
S57	150	120	2.14×10^5	0	30	60
S67	184	149	3.04×10^5	0	35	70
S77	224	179	5.26×10^5	0	45	90
S87	281.5	221.5	1.68×10^6	0	60	120
S97	326.3	256.3	2.54×10^6	0	70	140

Values for types not listed in the table are available on request.

4.5 Project planning notes for BS.F, PS.F, PS.C gear units

Efficiency level of gear units

General information

The efficiency of gear units is mainly determined by the gearing and bearing friction. Keep in mind that the starting efficiency of a gear unit is always less than its efficiency at operating speed.

BS.F gear units

The efficiency of BS.F gear units is up to 94% (2-stage).

PS.F, PS.C gear units

The efficiency of planetary gear units varies with the number of gear stages, between 98% (2-stage) and 99% (1-stage).

INFORMATION

For PS.F gear units with circumferential backlash option "M" used in S1 duty cycle, please contact SEW-EURODRIVE.

INFORMATION

When input and output elements are mounted on **servo gear units**, the **shaft shoulder can be used as a stop** for transmission elements (belt pulley, pinion gear, etc.).

Overhung and axial loads

Overhung load calculation

An important factor for determining the resulting overhung load is the type of transmission element mounted to the shaft end. The following transmission element factors f_Z also have to be considered for various transmission elements according to the following formula:

$$f_Z = f_{Z1} \times f_{Z2}$$

Transmission element	Transmission element factor f_{Z1}	Comments
Gears	1.15	< 17 teeth
Chain sprockets	1.40	< 13 teeth
Chain sprockets	1.25	< 20 teeth
Narrow V-belt pulleys	1.75	Influence of the pre-tensioning
Flat belt pulleys	2.50	Influence of the pre-tensioning
Toothed belt pulleys	2.00 - 2.50	Influence of the pre-tensioning
Gear rack pinion, pre-tensioned	2.00	Influence of the pre-tensioning
Gear rack pinion, not pre-tensioned	1.15	< 17 teeth

INFORMATION

Factor f_{Z2} only applies to helical output elements.

Helical output elements		
Gear unit	**Helix angle β [1) 2)]**	**f_{Z2}**
BS.F502-802 PS.F621-922, PSBF321-521 PS.C221 - PS.C622	≤ 11 °	1.00
	20 °	1.20

1) For 11 ° < β < 20 °, f_Z must be interpolated linearly.

2) For helix angles > 20 °, please contact SEW-EURODRIVE.

Permitted overhung load

The basis for determining the permitted overhung loads is the computation of the rated bearing service life L_{H10} of the rolling bearings (according to ISO 281).

For special operating conditions, the permitted overhung loads can be determined with regard to the modified bearing service life L_{na} on request.

INFORMATION

The values refer to force applied to the center of the shaft end (in right-angle gear units as viewed onto drive end). The values for the force application angle α and direction of rotation are based on the most unfavorable conditions.

INFORMATION

Reduction of overhung loads

Only 50% of the F_{Ramax} and F_{Rapk} values specified in the selection tables are permitted in mounting positions M1 and M3 with wall attachment on the front face for BS.F gear units.

Higher permitted overhung loads

Exactly considering the force application angle α and the direction of rotation makes it possible to achieve a higher overhung load than listed in the selection tables.

Contact SEW-EURODRIVE in such cases.

Definition of force application point

The force application is defined according to the following figure:

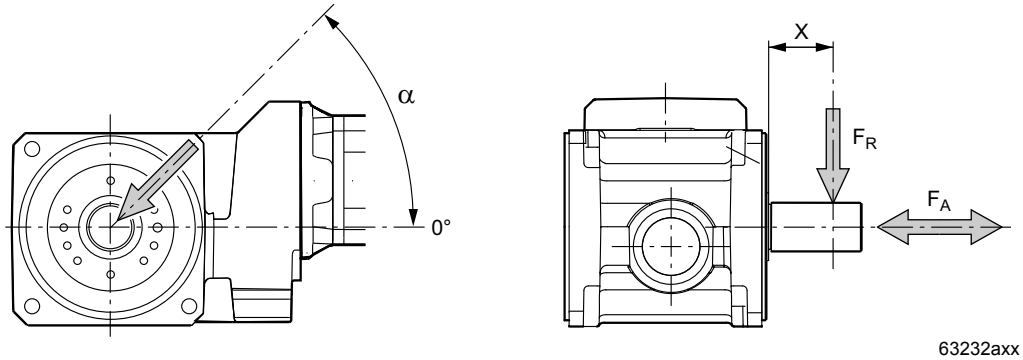

63232axx

Permitted axial loads

If there is no overhung load, then an axial force F_A (tension or compression) amounting to 50% of the overhung load given in the selection tables is permitted.

Output end: Overhung load conversion for off-center force application

The permitted overhung loads F_{Ramax} and F_{Rapk} listed in the data tables apply to force application at l / 2 (solid shaft) or for force application at the shaft end face (hollow shaft, flange block). If the distance between the force application point an the gear unit is different, the overhung loads must be determined anew according to the project planning procedure page 44 .

The following conditions must be met:

$$F_R \le F_{Ra\max} \cdot \frac{a}{b+x}\ [N] \qquad F_R \le \frac{c}{f+x}\ [N]$$

F_{Ramax} = Permitted overhung load [N]

x = Distance from the shaft shoulder to the force application point in [mm]

a, b, f = Gear unit constant for overhung load conversion [mm]

c = Gear unit constant for overhung load conversion [Nmm]

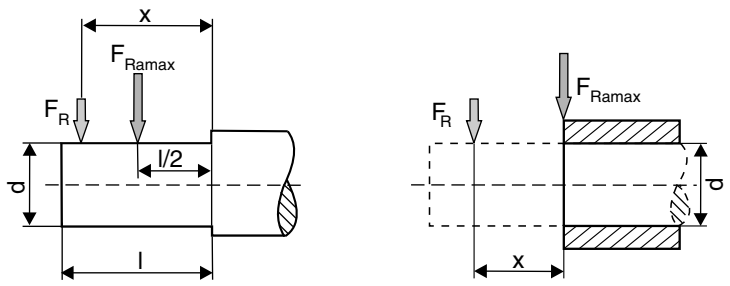

63215axx

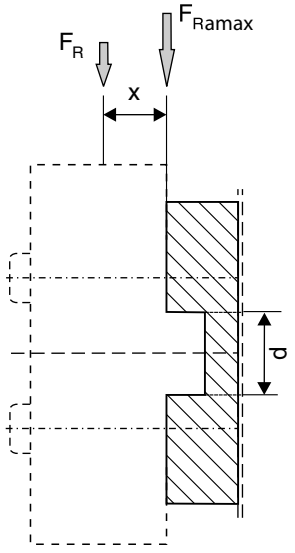

63102axx

Gear unit constants for overhung load conversion

Gear unit	a mm	b mm	c Nmm	f mm	d mm	l mm
BSF / BSKF202	113.1	95.6	7.35×10^4	0	20	35
BSHF / BSAF202	116.6	116.6	--	--	--	--
BSBF202	101.5	101.5	--	--	--	--
BSF / BSKF302	122.6	104.6	8.61×10^4	0	22	36
BSHF / BSAF302	126.6	126.6	--	--	--	--
BSBF302	111.0	111.0	--	--	--	--
BSF / BSKF402	152.2	123.2	2.56×10^5	0	32	58
BSHF / BSAF402	143.7	143.7	--	--	--	--
BSBF402	132.0	132.0	--	--	--	--
BSF / BSKF502	175.4	134.4	4.92×10^5	0	40	82
BSHF / BSAF502	162.4	162.4	--	--	--	--
BSBF502	145.3	145.3	--	--	--	--
BSF / BSKF602	195.9	154.9	9.84×10^5	0	55	82
BSHF / BSAF602	189.9	189.9	--	--	--	--
BSBF602	170.8	170.8	--	--	--	--
BSF / BSKF802	242.7	190.2	1.89×10^6	0	75	105
BSHF / BSAF802	243.2	243.2	--	--	--	--
BSBF802	206.0	206.0	--	--	--	--

Gear unit	a mm	b mm	c Nmm	f mm	d mm	l mm
PSF / PSKF121/122	47.6	36.6	2.08×10^4	0	14	22
PSF / PSKF221/222	53.6	39.6	2.41×10^4	0	16	28
PSBF221/222	64.1	64.1	--	--	--	--
PSF / PSKF321/322	65.0	47.0	7.97×10^4	0	22	36
PSBF321/322	72.5	72.5	--	--	--	--
PSF / PSKF521/522	83.1	54.1	2.52×10^5	0	32	58
PSBF521/522	87.5	87.5	--	--	--	--
PSF / PSKF621/622	113.6	72.3	5.48×10^5	0	40	82
PSBF621/622	105.0	105.0	--	--	--	--
PSF / PSKF721/722	126.6	85.6	1.42×10^6	0	55	82
PSBF721/722	138.5	138.5	--	--	--	--
PSF / PSKF821/822	153.2	100.7	3.21×10^6	0	75	105
PSBF821/822	156.0	156.0	--	--	--	--
PSF / PSKF921/922	170.7	105.7	5.30×10^6	0	85	130

Gear unit	a mm	b mm	c Nmm	f mm	d mm	l mm
PS.C221/222	57	43	3.41×10^4	0	16	28
PS.C321/322	63.5	45.5	7.55×10^4	0	22	36
PS.C521/522	95.5	66.5	2.13×10^5	0	32	58
PS.C621/622	107.5	66.5	3.68×10^5	0	40	82

Values for types not listed in the table are available on request.

4.6 Project planning example Gantry with servo drives

X-axis planning (travel axis)

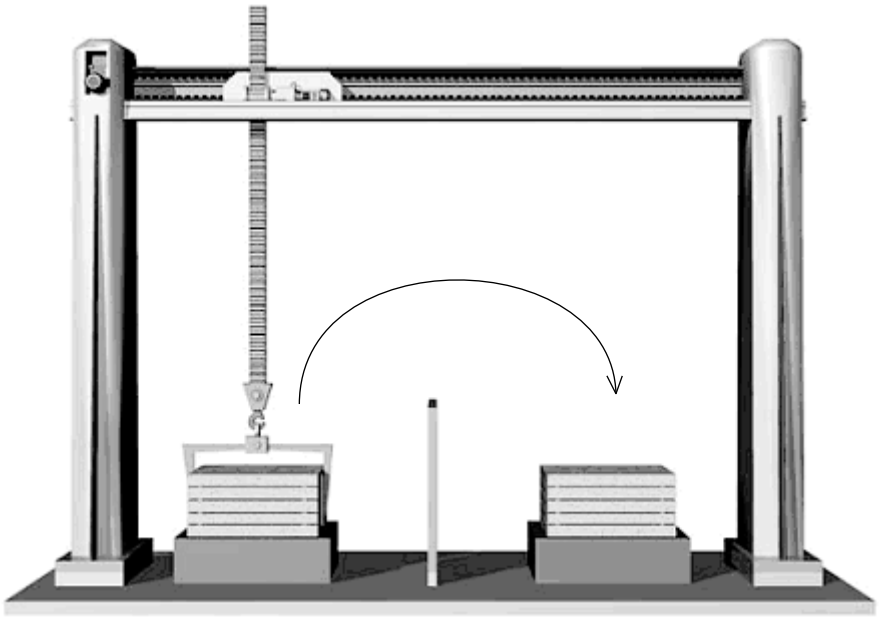

61220axx

Reference data:

- Total moved mass: m_L = 50 kg
- Diameter of the belt pulley: d_0 = 75 mm
- Friction coefficient of the axis: μ = 0.01
- Traveling velocity: v_{max} = 2 m/s
- Maximum occurring acceleration/deceleration: a_{max} = 10 m/s^2
- Cycle time: t_z = 3 s
- Rest period: t_p = 1.8 s
- Load efficiency: η_L= 0.9
- Mounting position of the gear unit: IM = M1

For the drive, a PC.C gear unit is designed to be mounted directly to a CMP servomotor.
The overhung load is to act on the shaft center.
Power is transmitted via a belt pulley.

Travel sections

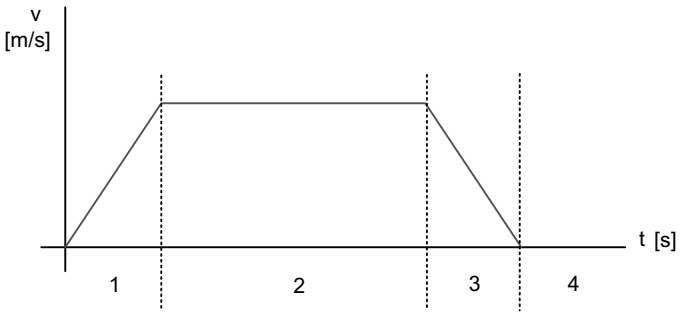

61222axx

Acceleration time in travel section 1, deceleration time in travel section 3

$$t_1 = t_3 = \frac{v_{max}}{a_{max}} = \frac{2\ m/s}{10\ m/s^2} = 0.2\,s$$

Travel time for constant travel in travel section 2

$$t_2 = t_z - t_p - t_1 - t_3$$
$$t_2 = 3\,s - 1.8\,s - 0.2\,s - 0.2\,s$$
$$t_2 = 0.8s$$

M_{stat} for all travel sections

$$M_{stat} = \frac{(m \cdot g \cdot \mu) \cdot \frac{d_0}{2}}{\eta_L}$$
$$M_{stat} = \frac{50kg \cdot 9.81\frac{m}{s^2} \cdot 0.01 \cdot \frac{0.075m}{2}}{0.9}$$
$$M_{stat} = 0.2043Nm$$

M_{dyn} during acceleration in travel section 1

$$M_{dyn} = \frac{(m \cdot a) \cdot \frac{d_0}{2}}{\eta_L}$$
$$M_{dyn} = \frac{50kg \cdot 10\frac{m}{s^2} \cdot \frac{0.075m}{2}}{0.9}$$
$$M_{dyn} = 20.83Nm$$

M_{dyn} during deceleration in travel section 3

$$M_{dyn} = m \cdot a \cdot \frac{d_0}{2} \cdot \eta_L$$
$$M_{dyn} = 50kg \cdot (-10\frac{m}{s^2}) \cdot \frac{0.075m}{2} \cdot 0.9$$
$$M_{dyn} = -16.875Nm$$

M_{max} during acceleration in travel section 1

$$M_{\max} = M_{stat} + M_{dyn1}$$
$$M_{\max} = 0.2043Nm + 20.8333Nm$$
$$M_{\max} = 21.04Nm$$

M_{max} during deceleration in travel section 3

$$M_{\max} = M_{stat} + M_{dyn3}$$
$$M_{\max} = 0.2043Nm + (-16.87Nm)$$
$$M_{\max} = -16.6657Nm$$

Output speed

$$n_{a\max} = \frac{v_{\max}}{d_0 \cdot \pi} \cdot 60$$
$$n_{a\max} = \frac{2\frac{m}{s}}{0.075m \cdot \pi} \cdot 60$$
$$n_{a\max} = 509.295\frac{1}{\min}$$

Gear ratio including 10 % motor speed reserve

n_N = 4500 rpm is an assumption

$$i = \frac{n_N \cdot 0.9}{n_{a\max}}$$
$$i = \frac{4500\frac{1}{\min} \cdot 0.9}{509.295\frac{1}{\min}}$$
$$i = 7.95$$

Maximum input speed

$$n_{max} = n_{a\,max} \cdot i$$

$$n_{max} = 509.295 \frac{1}{min} \cdot 7$$

$$n_{max} = 3565.065 \frac{1}{min}$$

Servo gear unit project planning

Project planning follows the project planning procedure on page 44 et seq.

The gear unit is selected on the basis of the table below:

	i	M_{amax} Nm	M_{apk} Nm	$M_{aNotaus}$ Nm	n_{ak} 1/min	J_G 10^{-4}kgm^2	c_T PSC Nm/'	F_{Ra} PSC N	F_{Rapk} PSC N
PSC221 1	3	29	40	60	1500	0.172	3.46	1170	2000
	5	34	42	63	720	0.0578	3.44	1390	2000
	7	32	**39**	59	800	**0.03**	3.28	1550	2000
	10	30	37	56	700	0.0144	2.92	1750	2000

	i	n_{epk} 1/min	η %	M1;M3;M5-6 a_0	M1;M3;M5-6 a_1	M1;M3;M5-6 a_2	M2 a_0	M2 a_1	M2 a_2	M4 a_0	M4 a_1	M4 a_2	φ '
PSC221 1	3	7000	99	101.00	-0.093	0	106.00	-0.104	0	109.00	-0.110	0	10
	5	7000	99	160.00	-0.181	0	163.00	-0.190	0	167.00	-0.200	0	10
	7	**7000**	**99**	186.00	-0.257	0	187.00	-0.264	0	186.00	-0.267	0	10
	10	7000	99	158.00	-0.178	0	161.00	-0.184	0	164.00	-0.194	0	10

Selection condition:

$$M_{max} \le M_{apk}$$

$$21.04 Nm \le 39 Nm$$

$$n_{max} \le n_{epk}$$

$$3565 \frac{1}{min} \le 7000 \frac{1}{min}$$

Condition is fulfilled.

Mean output speed

$$n_{am} = \frac{n_1 \cdot t_1 + ... + ...n_n \cdot t_n}{t_1 + ... + ...t_n}$$

$$n_{am} = \frac{\frac{509.295\frac{1}{\min}}{2} \cdot 0.2s + 509.295\frac{1}{\min} \cdot 0.8s + \frac{509.295\frac{1}{\min}}{2} \cdot 0.2s}{0.2s + 0.8s + 0.2s + 1.8s}$$

$$n_{am} = 169.765\frac{1}{\min}$$

Selection condition:

$$n_{am} \le n_{ak}$$

$$169.765\frac{1}{\min} \le 809\frac{1}{\min}$$

Condition is fulfilled.

Effective torque of servo gear unit

$$M_{aeff} = \sqrt[8]{\frac{n_1 \cdot t_1 \cdot |M_1|^8 + ... + ...n_n \cdot t_n \cdot |M_n|^8}{n_1 \cdot t_1 + ... + n_n \cdot t_n}}$$

$$M_{aeff} = \sqrt[8]{\frac{\frac{509.295\frac{1}{\min}}{2} \cdot 0.2s \cdot |21.04Nm|^8 + 509.295\frac{1}{\min} \cdot 0.8s \cdot |0.2043Nm|^8 + \frac{506.295\frac{1}{\min}}{2} \cdot 0.2s \cdot |-16.67Nm|^8}{0.2s \cdot 254.64\frac{1}{\min} + 0.8s \cdot 509.295\frac{1}{\min} + 0.2s \cdot 254.64\frac{1}{\min}}}$$

$$M_{aeff} = 16.065Nm$$

Selection condition:

$$M_{aeff} \le M_{a\max}$$

$$16.065Nm \le 32Nm$$

Condition is fulfilled.

Thermal torque of servo gear unit

$$M_{ath} = \sqrt[1.2]{\frac{n_1 \cdot t_1 \cdot |M_1|^{1.2} + \ldots + \ldots n_n \cdot t_n \cdot |M_n|^{1.2}}{n_1 \cdot t_1 + \ldots + n_n \cdot t_n}}$$

$$M_{ath} = \sqrt[1.2]{\frac{\frac{509.295 \frac{1}{\min}}{2} \cdot 0.2s \cdot |21.04Nm|^{1.2} + 509.295 \frac{1}{\min} \cdot 0.8s \cdot |0.2043Nm|^{1.2} + \frac{506.295 \frac{1}{\min}}{2} \cdot 0.2s \cdot |-16.67Nm|^{1.2}}{0.2s \cdot 254.64 \frac{1}{\min} + 0.8s \cdot 509.295 \frac{1}{\min} + 0.2s \cdot 254.64 \frac{1}{\min}}}$$

$$M_{ath} = 5.009Nm$$

Thermal factors for mounting position M1

a_0=186

a_1=-0.257

a_3=0

$$M_{Therm} = a_0 + a_1 \cdot n_{am} + \frac{a_2}{n_{am}^{1.2}}$$

$$M_{Therm} = 186 + (-0.257 \cdot 169.765 \frac{1}{\min}) + \frac{0}{169.765^{1,2}}$$

$$M_{Therm} = 142.37Nm$$

Selection condition:

$$M_{ath} \leq M_{Therm}$$

$$5.035Nm \leq 142.37Nm$$

Condition is fulfilled.

Overhung load calculation

For transmission element factors for overhung loads of different transmission elements at the output shaft, refer to page 50 and page 53.

$$F_{R\max} = \frac{M_{\max}}{\frac{d_0}{2}} \cdot f_z$$

$$F_{R\max} = \frac{21.04Nm}{\frac{0.075m}{2}} \cdot 2.5$$

$$F_{R\max} = 1402N$$

The force application point is the center of the output shaft.

Selection condition:

$$F_{R\max} \leq F_{RaPk}$$

$$1402N \leq 2000N$$

Condition is fulfilled.

Calculating the bearing force

$$M_{akub} = \sqrt[3]{\frac{n_1 \cdot t_1 \cdot |M_1|^3 + ... + ...n_n \cdot t_n \cdot |M_n|^3}{n_1 \cdot t_1 + ... + n_n \cdot t_n}}$$

$$M_{akub} = \sqrt[3]{\frac{\frac{509.295\frac{1}{\min}}{2} \cdot 0.2s \cdot |21.04Nm|^3 + 509.295\frac{1}{\min} \cdot 0.8s \cdot |0.2043Nm|^3 + \frac{506.295\frac{1}{\min}}{2} \cdot 0.2s \cdot |-16.67Nm|^3}{0.2s \cdot 254.64\frac{1}{\min} + 0.8s \cdot 509.295\frac{1}{\min} + 0.2s \cdot 254.64\frac{1}{\min}}}$$

$$M_{akub} = 11.172Nm$$

$$F_{Rkub} = \frac{M_{akub}}{\frac{d_0}{2}} \cdot f_z$$

$$F_{Rkub} = \frac{11.12Nm}{\frac{0.075m}{2}} \cdot 2.5$$

$$F_{Rkub} = 744.8N$$

Selection condition:

$$F_{Rkub} \le F_{R\max}$$

$$744.8N \le 1402N$$

Condition is fulfilled.

Load torques in travel sections 1 to 3

Travel section 1

$$M_{e\max 1} = \frac{M_{dyn1}}{i \cdot \eta_G}$$

$$M_{e\max 1} = \frac{21.04Nm}{7 \cdot 0.99}$$

$$M_{e\max 1} = 3.036Nm$$

Travel section 2

$$M_{e\max 2} = \frac{M_{stat}}{i \cdot \eta_G}$$

$$M_{e\max 2} = \frac{0.2043Nm}{7 \cdot 0.99}$$

$$M_{e\max 2} = 0.0294Nm$$

Travel section 3

$$M_{e\max 3} = \frac{M_{dyn3} \cdot \eta_G}{i}$$

$$M_{e\max 3} = \frac{-16.67Nm \cdot 0.99}{7}$$

$$M_{e\max 3} = -2.357Nm$$

Motor selection Preliminary determination of motor using torque M_{pk}.

n_N	Motor	M_0	I_0	M_{pk}	I_{max}	M_{0VR}	I_{0VR}	J_{mot}	J_{bmot}	M_{B1}	M_{B2}	L_1	R_1	U_{p0} cold
min^{-1}		Nm	A	Nm	A	Nm	A	kgcm^2		Nm		mH	Ω	V
4500	CMP40S	0.5	1.2	1.9	6.1	-	-	0.1	0.13	0.85	--	23	11.94	27.5
	CMP40M	0.8	0.95	3.8	6.0	-	-	0.15	0.18	0.95	--	45.5	19.92	56
	CMP50S	1.3	1.32	5.2	7.0	1.7	1.7	0.42	0.48	3.1	4.3	37	11.6	62
	CMP50M	2.4	2.3	10.3	13.1	3.5	3.35	0.67	0.73	4.3	3.1	20.5	5.29	66
	CMP50L	3.3	3.15	15.4	19.5	4.8	4.6	0.92	0.99	4.3	3.1	14.6	3.56	68
	CMP63S	2.9	3.05	11.1	18.3	4	4.2	1.15	1.49	7	9.3	18.3	3.34	64
	CMP63M	5.3	5.4	21.4	32.4	7.5	7.6	1.92	2.26	9.3	7	9.8	1.49	67
	CMP63L	7.1	6.9	30.4	41.4	10.3	10	2.69	3.03	9.3	7	7.2	1.07	71

Selected motor:

CMP63M

M_{pk}= 21.4 Nm

J_{mot}= 1.92 × 10^{-4} kgm^2

Determining the inertia ratio "k"

$$J_{ext} = 91.2 \cdot m \cdot \left(\frac{v_{\max}}{n_{\max}}\right)^2 + J_G$$

$$J_{ext} = 91.2 \cdot 50kg \cdot \frac{\left(2\frac{m}{s}\right)^2}{3565.065\frac{1}{\min}} + 0.03 \cdot 10^{-4} kgm^2$$

$$J_{ext} = 14.38125 \cdot 10^{-4} kgm^2$$

This means J_{ext} is with reference to the motor shaft.

$$k = \frac{J_{ext}}{J_{Motor}}$$

$$k = \frac{14.38125 \cdot 10^{-4} kgm^2}{1.92 \cdot 10^{-4} kgm^2}$$

$$k = 7.49$$

Selection condition:

$$k \le 15$$

$$7.49 \le 15$$

Condition is fulfilled.

Intrinsic acceleration or deceleration of motor in sections 1 and 3

$$M_{Eigen} = \left(J_G + J_{Mot}\right) \cdot \frac{n_{max}}{9.55 \cdot t}$$

$$M_{Eigen} = \left(0.03 \cdot 10^{-4}\, kgm^2 + 1.92 \cdot 10^{-4}\, kgm^2\right) \cdot \frac{3565.065 \frac{1}{\min}}{9.55 \cdot 0.2s}$$

$$M_{Eigen} = 0.3639Nm$$

Maximum motor torques in sections 1 and 3

Travel section 1

$$M_{t1} = M_{e\max 1} + M_{Eigen}$$

$$M_{t1} = 3.036Nm + 0.3639Nm$$

$$M_{t1} = 3.3999Nm$$

Travel section 2

$$M_{t3} = M_{e\max 3} + M_{Eigen}$$

$$M_{t3} = -2.357Nm + 0.3639Nm$$

$$M_{t3} = -1.9931Nm$$

Effective motor torque

$$M_{eff} = \sqrt{\frac{1}{t_z}\left(M_1^2 \cdot t_1 + ... + M_n^2 \cdot t_n\right)}$$

$$M_{eff} = \sqrt{\frac{\left(3.399Nm\right)^2 \cdot 0.2s + \left(0.0294Nm\right)^2 \cdot 0.8s + \left(-1.9931Nm\right)^2 \cdot 0.2s}{3s}}$$

$$M_{eff} = 1.0174Nm$$

Thermal effective motor speed

$$n_{eff} = \sqrt[1.5]{\frac{n_1^{1.5} \cdot t_1 + ... + n_n^{1.5} \cdot t_n}{t_z}}$$

$$n_{eff} = \sqrt[1.5]{\frac{\left(\frac{3565.065 \frac{1}{\min}}{2}\right)^{1.5} \cdot 0.2s + \left(3565.065 \frac{1}{\min}\right)^{1.5} \cdot 0.8s + \left(\frac{3565.065 \frac{1}{\min}}{2}\right)^{1.5} \cdot 0.2s}{3s}}$$

$$n_{eff} = 1646.3 \frac{1}{\min}$$

Determining the dynamic and thermal motor operating points

- The thermal operating point must be below or exactly on the thermal limit characteristic curve:

$$M_{eff} \leq M_{Nenn}$$

- The dynamic limit torque must be checked:

$$M_{\max Mot} \leq M_{pk}$$

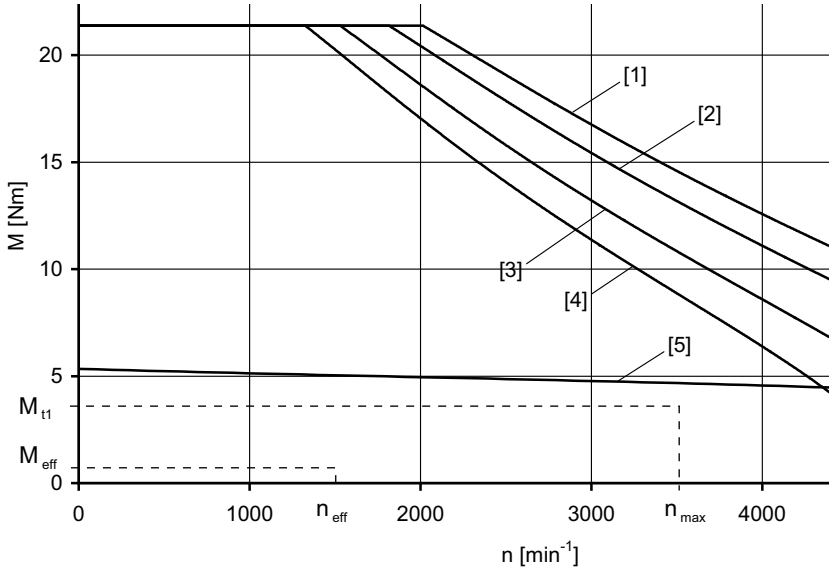

[1] $M_{dynamic}$ (n) 500 V
[2] $M_{dynamic}$ (n) 460 V
[3] $M_{dynamic}$ (n) 400 V
[4] $M_{dynamic}$ (n) 360 V
[5] M $S1_{thermal}$ (derating)

Inverter assignment

The inverter assignment of CMP servomotors to MOVIAXIS® and MOVIDRIVE® can be found in the "CMP40/50/63 Synchronous Servomotors" catalog.

Calculating the braking resistor

Peak braking power in travel section 3

$$P_{Br\_pk} = \frac{M_{tn} \cdot n_{tn} \cdot \eta_{Last}}{9550}$$

$$P_{Br\_pk} = \frac{1.9931Nm \cdot 3565\frac{1}{\text{min}} \cdot 0.9}{9550}$$

$$P_{Br\_pk} = 0.6696kW$$

Mean braking power in travel section 3

$$P_{Br} = \frac{M_{tn} \cdot n_{tn} \cdot \eta_{Last}}{9550}$$

$$P_{Br} = \frac{1.9931Nm \cdot \frac{3565\frac{1}{\text{min}}}{2} \cdot 0.9}{9550}$$

$$P_{Br} = 0.3348kW$$

Effective braking power

$$P_{Br\_eff} = \frac{P_{Br} \cdot t_3}{t_z}$$

$$P_{Br\_eff} = \frac{0.3348kW \cdot 0.2s}{3s}$$

$$P_{Br\_eff} = 0.223kW$$

The selection of the braking resistor depends, among other factors, on which braking resistor may be connected to the respective inverter. If you use a MOVIDRIVE® inverter, refer to the system manual for relevant notes.

If you use a MOVIAXIS® servo inverter, a suitable braking resistor must be determined using "SEW Workbench".

5 Mounting Positions of Gear Units

5.1 General information on the mounting positions of R, F, K, S, W gear units

SEW-EURODRIVE differentiates between six mounting positions M1 - M6 for gear units and gearmotors. The following figure shows the position of the gear unit in mounting positions M1 - M6.

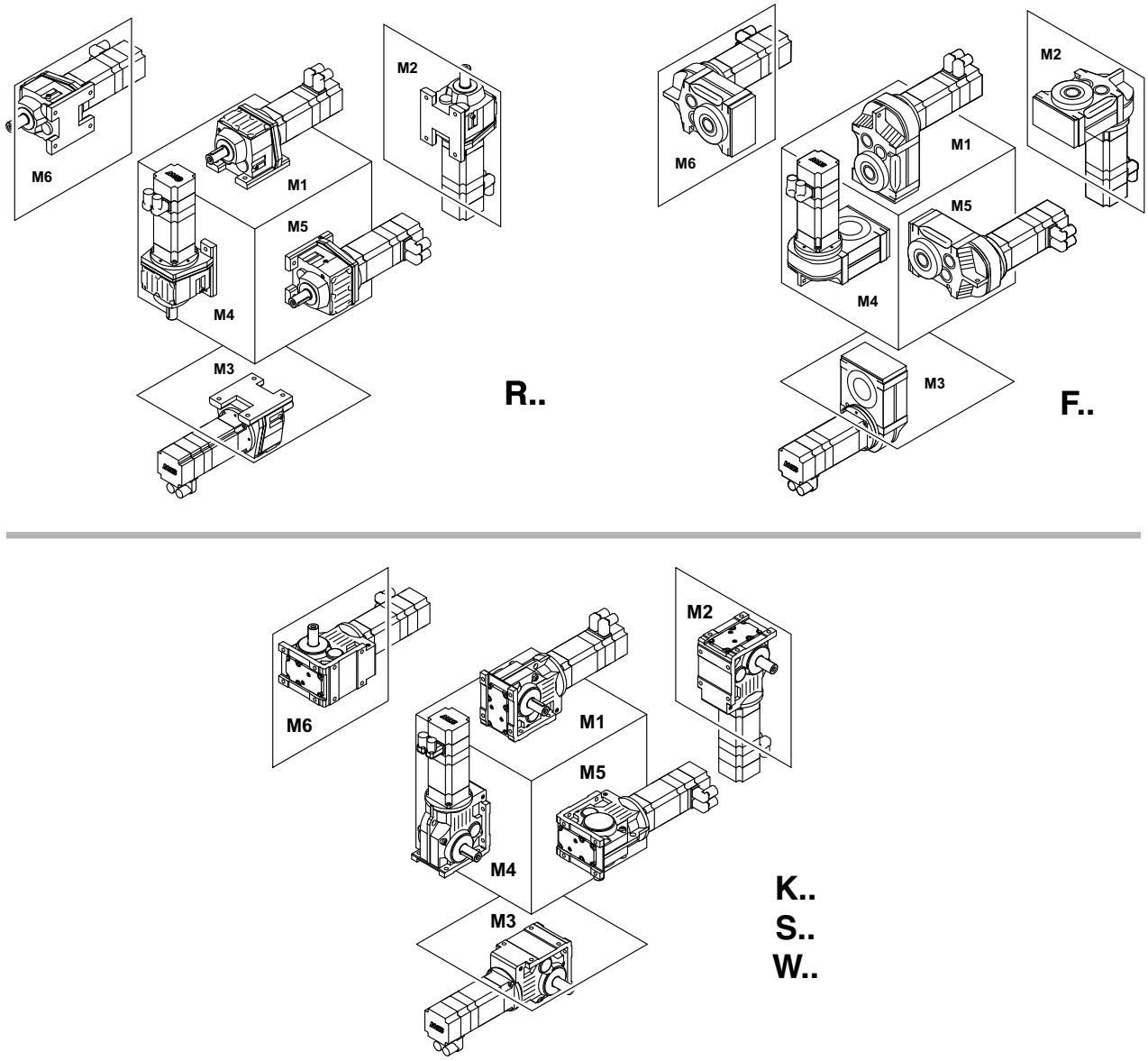

63232axx

For information on mounting position M0, refer to page 76.

5.2 Order information for servo gearmotors R, F, K, S, W gear units

	INFORMATION
	The following order information is required for R, F, K and S gear units or gearmotors in addition to the mounting position to exactly determine the type of drive. This information is also required for SPIROPLAN® gearmotors (W gearmotors) that do not depend on a particular mounting position.

Direction of rotation of the output shaft

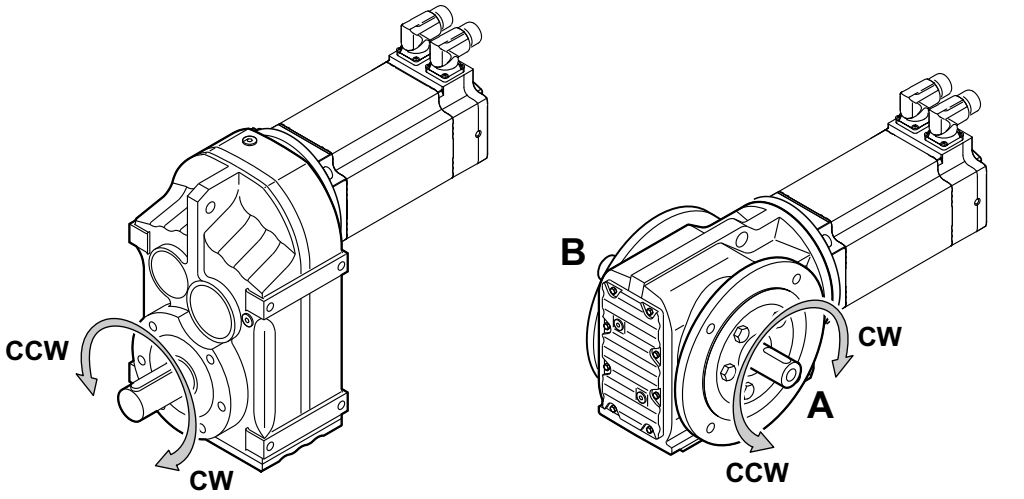

63234AXX

As viewed at the output shaft: Clockwise (CW) = Rotating clockwise
Counterclockwise (CCW)= Rotating counterclockwise

Positions of output shaft and output flange

In right-angle gear units, you also have to indicate the position of the output shaft and the output flange:

- A or B or AB

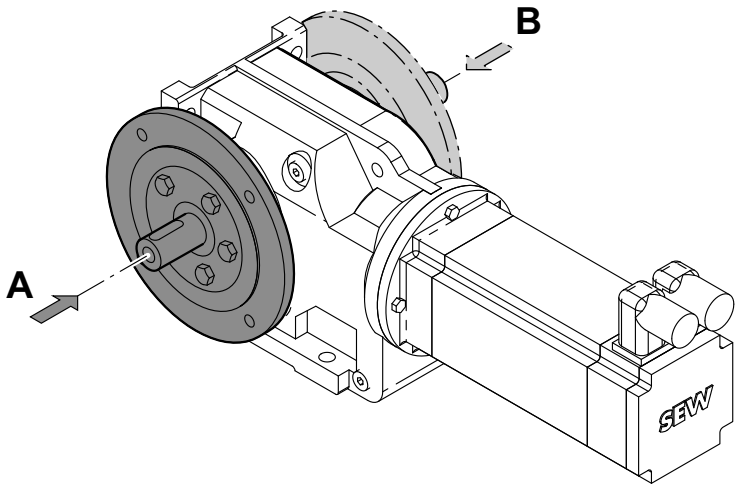

63235axx

Position of the output end in right-angle gear units

In shaft mounted right-angle gear units with a shrink disk, you also have to indicate whether the A or B end is the output end. In below figure, the B side is the output end. The shrink disk is located opposite the output end, here on the A side.

In shaft mounted right-angle gear units, the "output end" is equivalent to the "shaft position" of right-angle gear units with solid shaft.

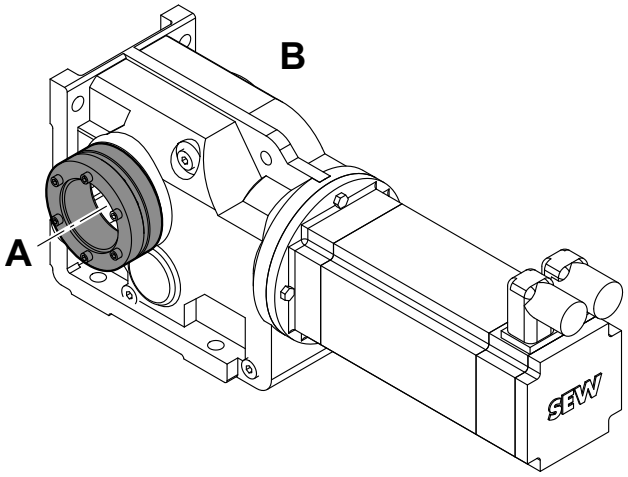

63236AXX

	INFORMATION
	You find the permitted mounting surfaces (= hatched area) in the mounting position sheets (page 78 and subsequent pages). **Example:** Only the mounting surface at the bottom is possible with helical-bevel gear units K167/K187 in mounting positions M5 and M6.

Changing the mounting position

It is important that you read the following information when you operate the gearmotor in a mounting position other than indicated in the order:

- Adjust lubricant fill quantity to match the new mounting position.
- Adjust position of breather valve.
- For helical-bevel gearmotors: Contact the SEW-EURODRIVE customer service prior to changing to mounting position M5 or M6 and when changing from M5 to M6, or vice versa.
- For helical-worm gearmotors: Contact the SEW-EURODRIVE customer service when changing to mounting position M2 or M3.

5.3 General information on mounting positions for BS.F, PS.F, PS.C gear units

Mounting position designations

SEW-EURODRIVE distinguishes between gear unit mounting positions M1 to M6. The following figure shows the spatial orientation of the gear unit in mounting positions M1 to M6 with the output end A.

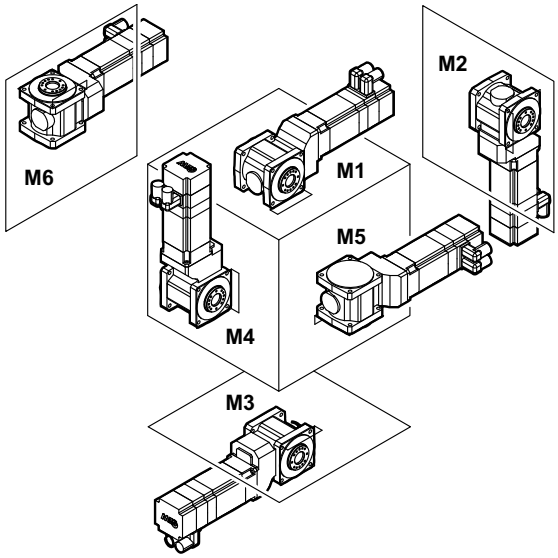

BS.F..

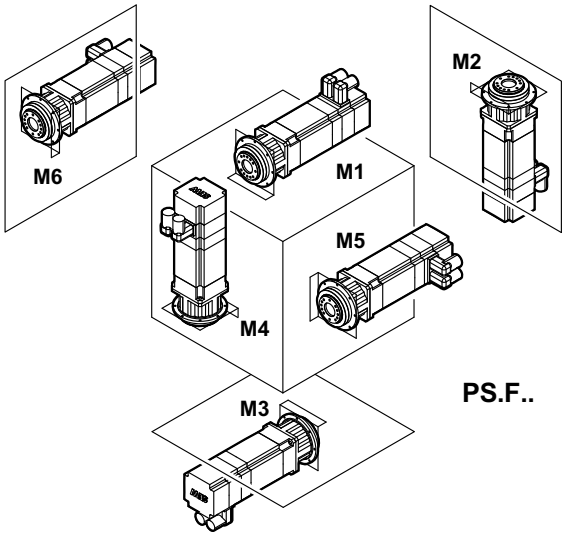

PS.F..

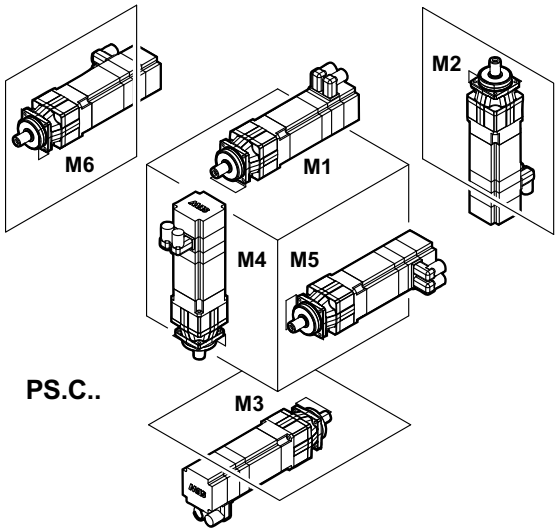

PS.C..

63319AXX

5.4 Order information for servo gearmotors BS.F, PS.F, PS.C gear units

Definition of sides A and B for the output shafts

When installing the gear unit via one of the output flanges, the gear unit must be attached to the shaft output side via the B5 output flange.

Gear unit type	Position		Fastening
	of the output shaft	of the shrink disk	
BSF.. /BSKF.. /BSBF	A end	-	Mounting via B5 flange on the A end
	B end	-	Mounting via B5 flange on the B end
BSHF..	-	B end	Mounting via B5 flange on the A end
	-	A end	Mounting via B5 flange on the B end
BSHF.. /I	-	A end	Mounting via B5 flange on the A end
	-	B end	Mounting via B5 flange on the B end
BSAF..	A end		Mounting via B5 flange on the A end
	B end		Mounting via B5 flange on the B end
BSF../BSKF..	AB	-	Mounting via B5 flange on the A and/or B end

For BSF.. helical-bevel servo gear units, the position of the output shaft A, B or AB (see following figure).

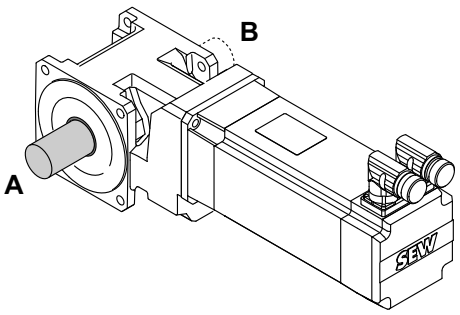

65959axx

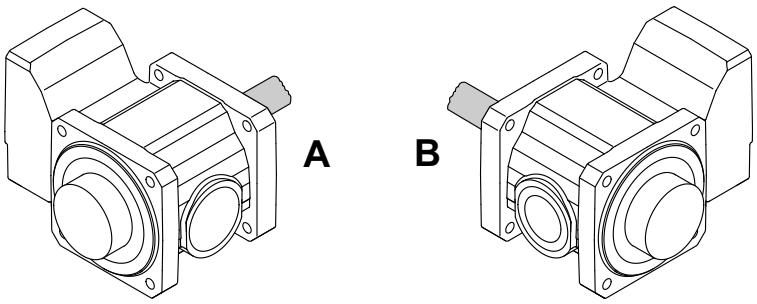

54671AXX

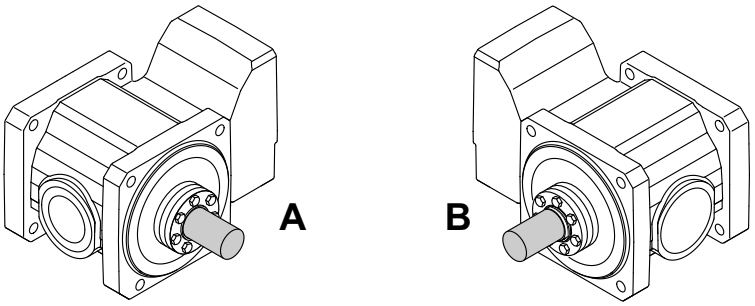

54672AXX

Direction of rotation of the output shaft

For a definition of the output shaft, see page 69.

5.5 Order information for servo gearmotors

Plug connectors of CMP servomotors

Servomotors of the CMP series are equipped with adjustable or radial connectors.

Position of the cable entry of CMP motors

Position "adjustable" has been defined for right-angle, rotatable connectors. This is the standard connector position.

A "radial" position has been defined for the straight connector housing (radial output). Radial connectors are optional.

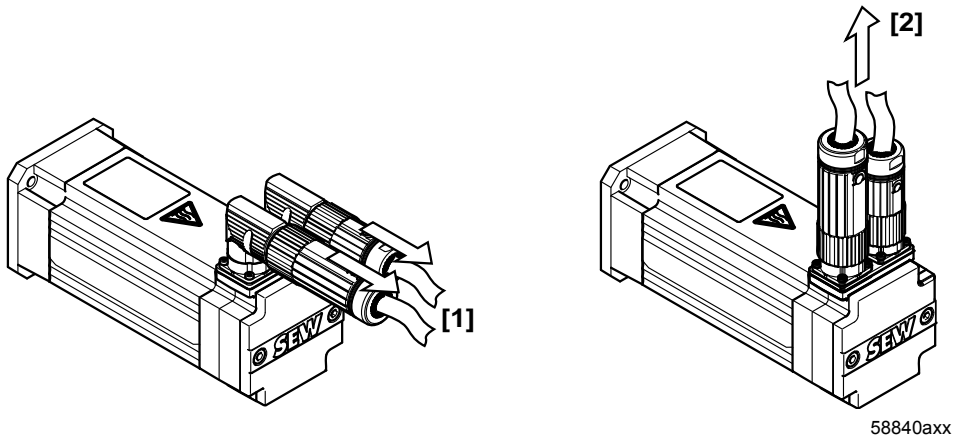

[1] Connector position "adjustable"

[2] Connector position "radial"

CMP motors are supplied with right-angle connectors in position "adjustable" as standard.

The right-angle connectors can be rotated to achieve all positions.

	INFORMATION
	The connector should only be rotated to install and connect the motor. Do not turn the connector regularly once it has been installed.

Connection with terminal box

Position of terminal box and cable entry

The product standard EN 60034 specifies that the following designations have to be used for terminal box positions:

- As viewed onto the output shaft = A end
- Designation as R (right), B (bottom), L (left) and T (top)

This new designation applies to motors without a gear unit in mounting position B3 (= M1). The previous designation is maintained for gearmotors.

The position of the motor terminal box has so far been specified with 0°, 90°, 180° or 270° as viewed onto the fan guard = B end.

The following figure shows both designations. Where the mounting position of the motor changes, "R", "B", "L" and "T" are rotated accordingly.

The cable entry position is specified with x, 1, 2, 3.

Unless other information is provided regarding the terminal box, the 270° type with "x" cable entry will be supplied.

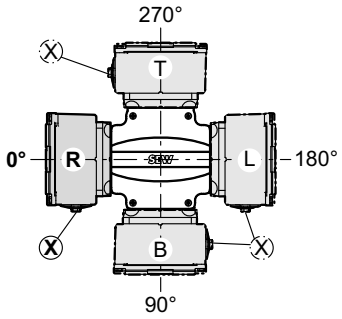

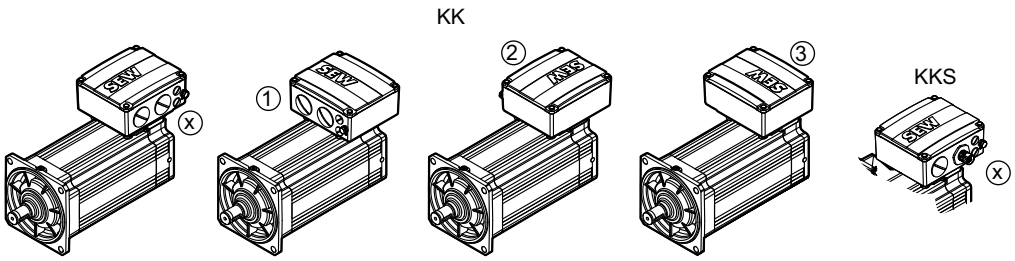

5.6 Key to the mounting position sheets

Symbols used

The following table shows the symbols used in the mounting position sheets and their meaning:

Symbol	Meaning
	Breather valve
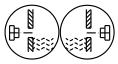	Oil level plug[1)]
	Oil drain plug
③	Cable entry position "3"

1) Does not apply to the first gear unit (larger gear unit) of multi-stage gear units

	INFORMATION
	Notes on the shafts illustrated on the mounting position sheets. Observe the following information regarding the illustrations on the mounting position sheets: • **For gear units with solid shaft:** The displayed shaft is always on the A end. • **For shaft-mounted gear units:** The shaft with dashed lines represents the customer shaft. The output end (= shaft position) is always shown on the A end.

	INFORMATION
	SPRIOPLAN® gearmotors are not dependant on the mounting position, except for W..37 and W47 gearmotors in mounting position M4. However, mounting positions M1 to M6 are also shown for SPIROPLAN® gear units to assist you in working with this documentation. **Important! Please note:** SPIROPLAN® gear units W..10 to W..30 cannot be equipped with breather valves, neither with oil level plugs or drain plugs. SPIROPLAN® gear units W..37 and W..47 can be equipped with breather valves in mounting position M4 and with oil drain plugs in mounting position M2.

	INFORMATION
	Some gear units can be supplied in mounting position M0. In this case, the gear unit will be delivered in a universal mounting position. The customer can then adjust it to the specific mounting position. Please contact SEW-EURODRIVE if you have any questions.

	INFORMATION
	Notes on the depicted motors. Motors are only represented symbolically on the mounting position sheets.

Churning losses

* → page 77

Churning losses may occur in some mounting positions. Contact SEW-EURODRIVE in case of the following combinations:

Mounting position	Gear unit type	Gear unit size	Input speed [rpm]
M2, M4	R	97 - 107	> 2500
		> 107	>1500
M2, M3, M4, M5, M6	F	97 - 107	> 2500
		> 107	> 1500
	K	77 - 107	> 2500
		> 107	> 1500
	S	77 - 97	> 2500

5.7 Mounting positions of helical gearmotors R

RX57-RX107

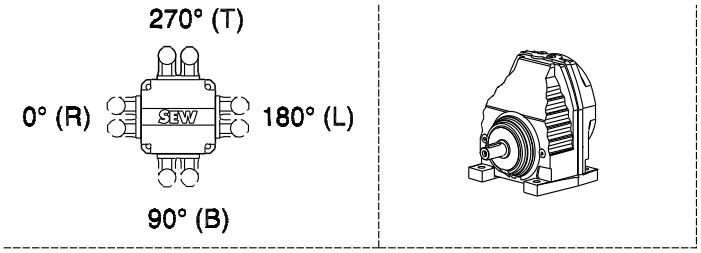

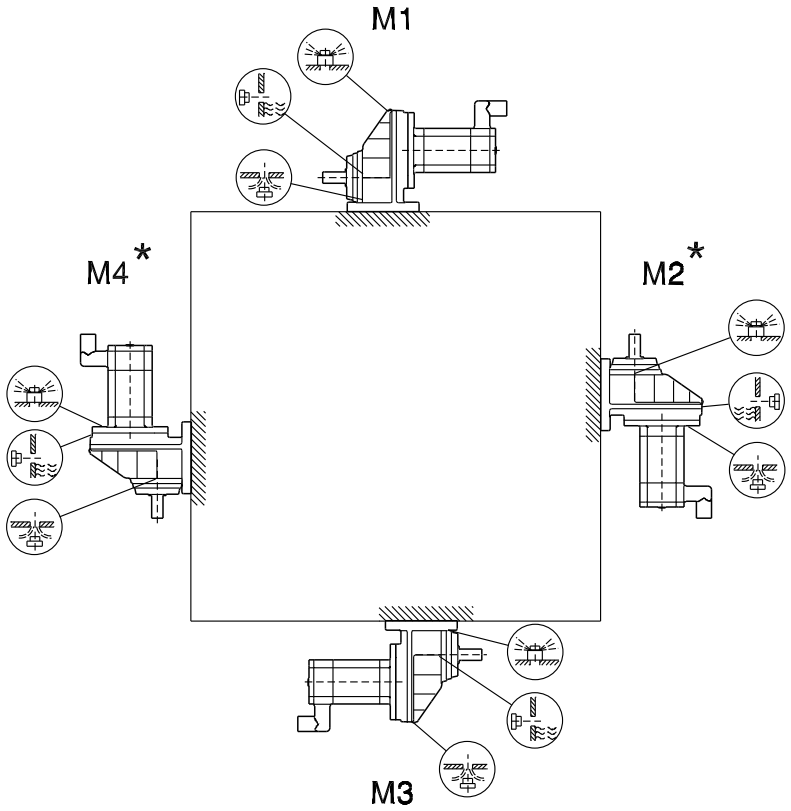

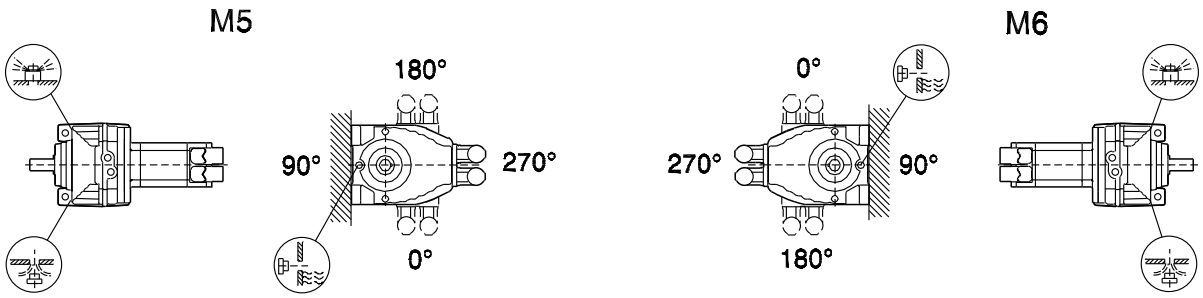

* → page 77

RXF57-RXF107

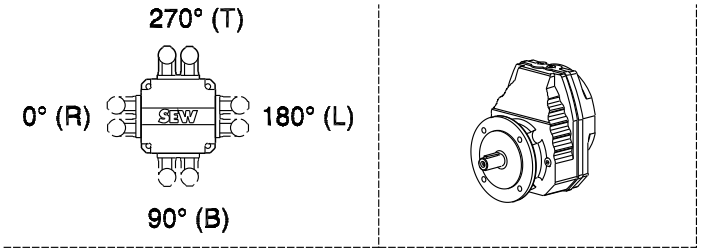

01 173 00 09

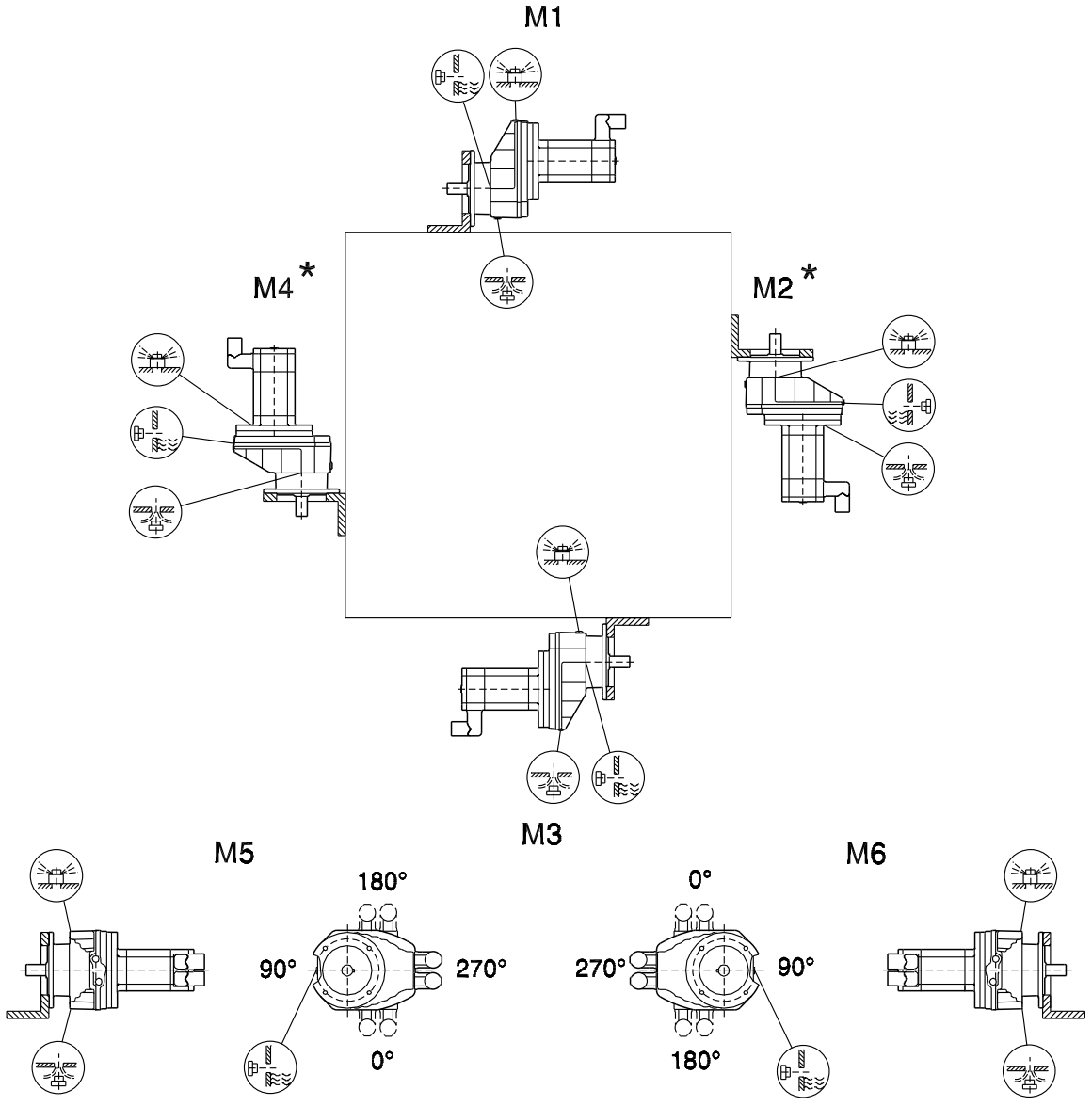

* → page 77

R07-R167

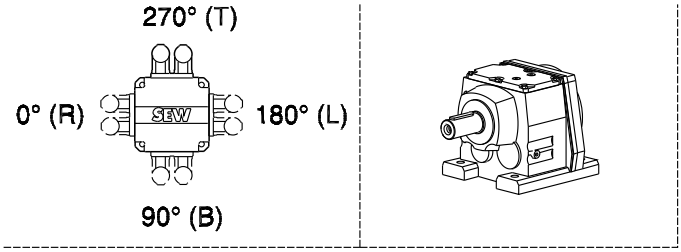

01 174 00 09

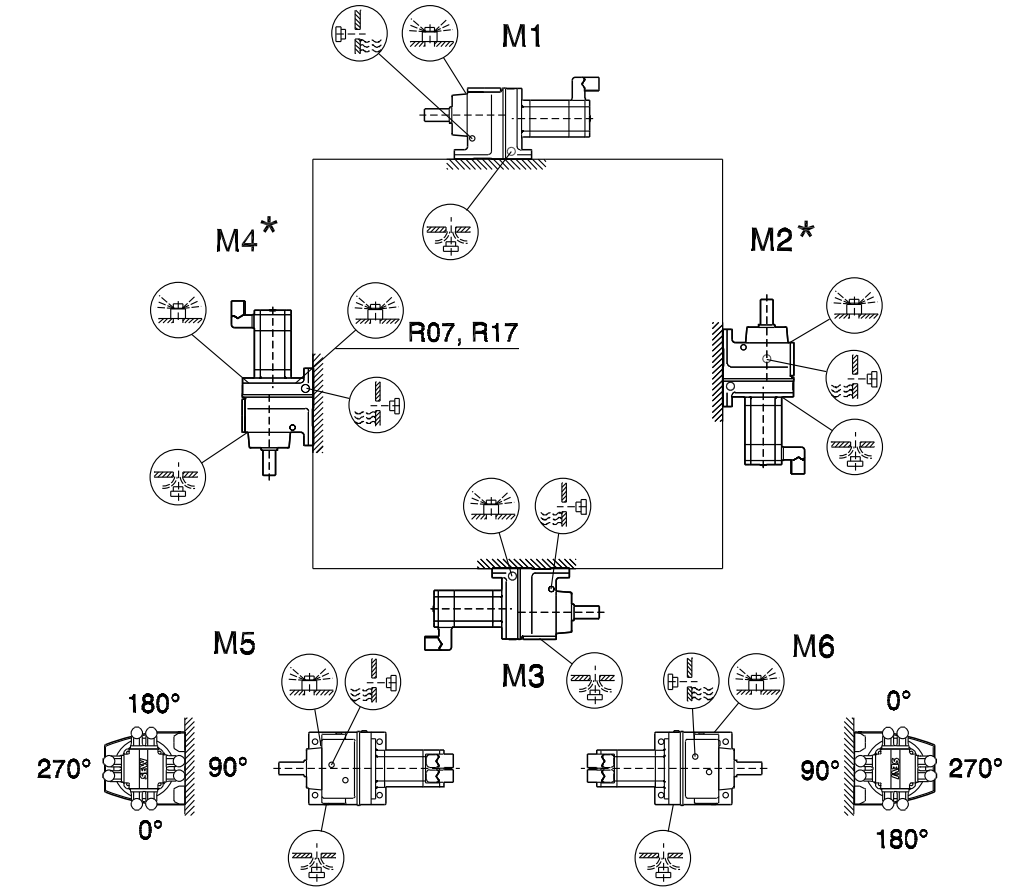

R07	⊗	M1, M2 , M3 , M5 , M6
R17, R27	⊗	M1, M3 , M5 , M6
R07, R17, R27	⊗ ⊗	
R47, R57	⊗	M5

* → page 77

RF07-RF167, RZ07-87

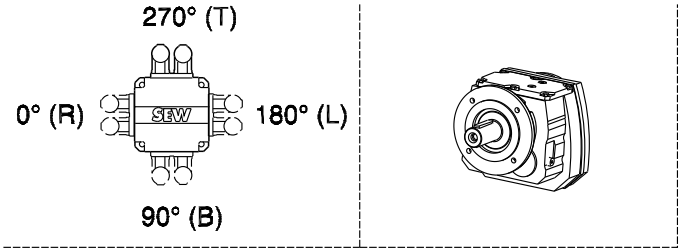

01 175 00 09

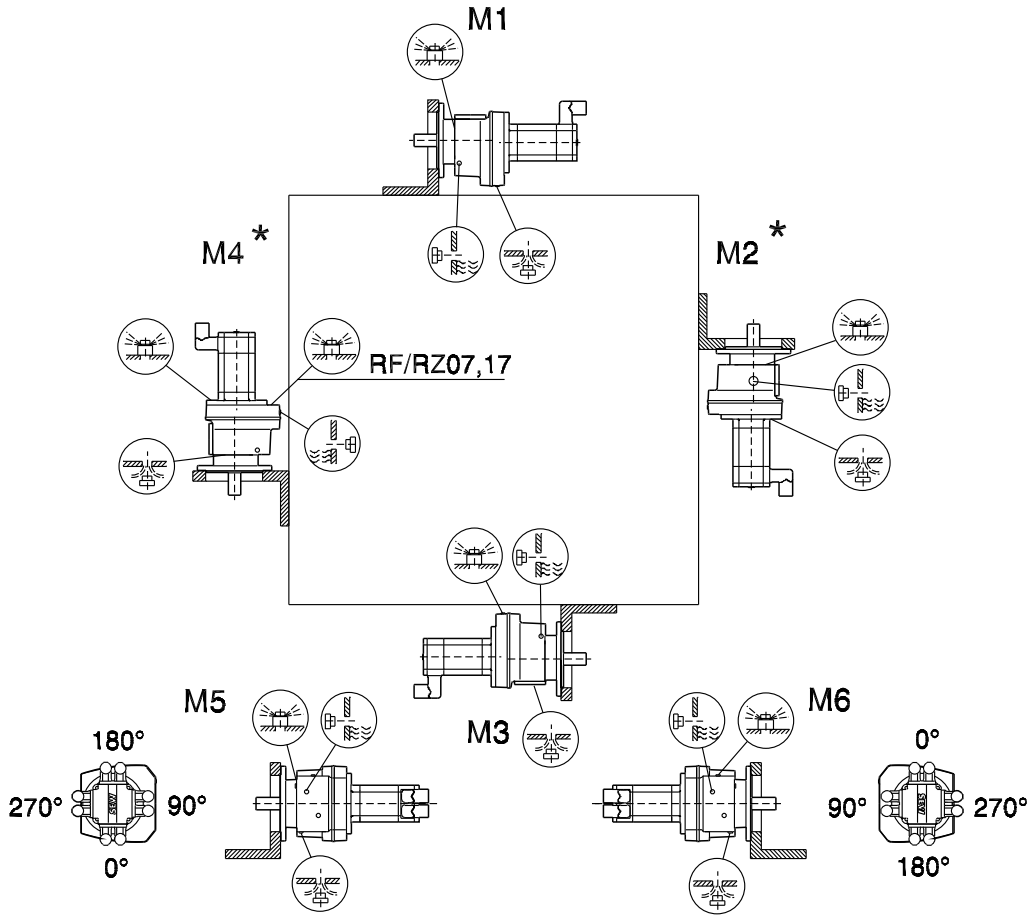

RF/RZ07 M1, M2 , M3 , M5 , M6

RF/RZ17,27 M1, M3 , M5 , M6

RF/RZ07, 17, 27

RF/RZ47, 57 M5

* → page 77

R07F-R87F

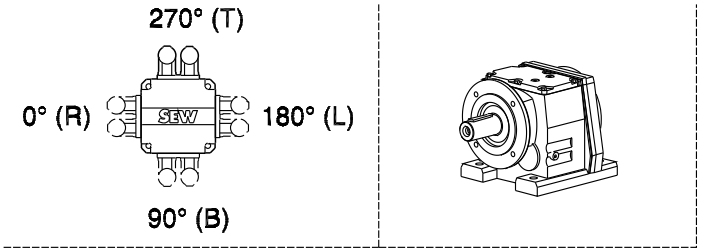

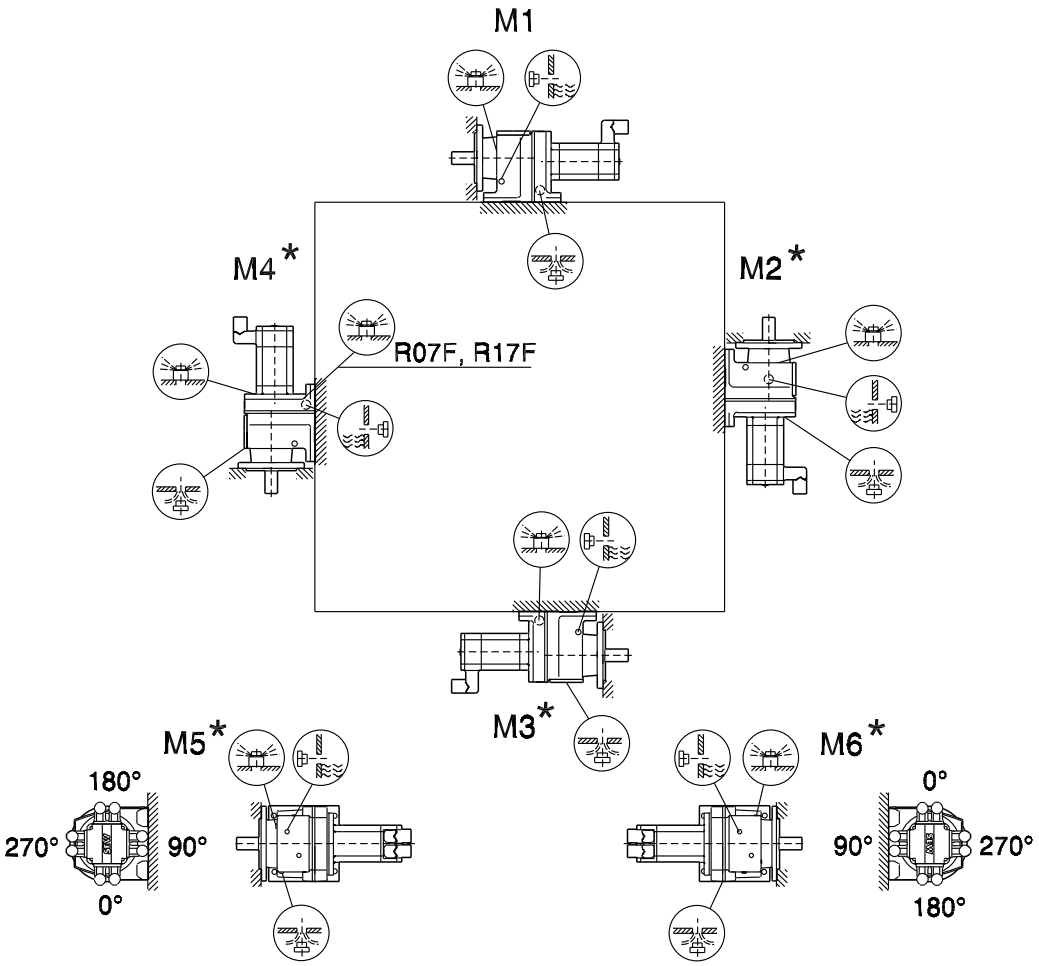

R07F		M1, M2 , M3 , M5 , M6
R17F, R27F		M1, M3 , M5 , M6
R07F, R17F, R27F		
R47F, R57F		M5

* → page 77

Note: Observe the notes in chapter "Project planning for gear units/Overhung and axial loads" (page 50).

5.8 Mounting positions of parallel shaft helical gearmotors F

F/FA..B/FH27B-157B, FV27B-107B

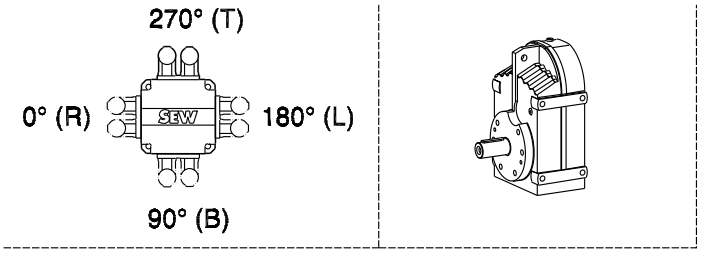

42 197 00 09

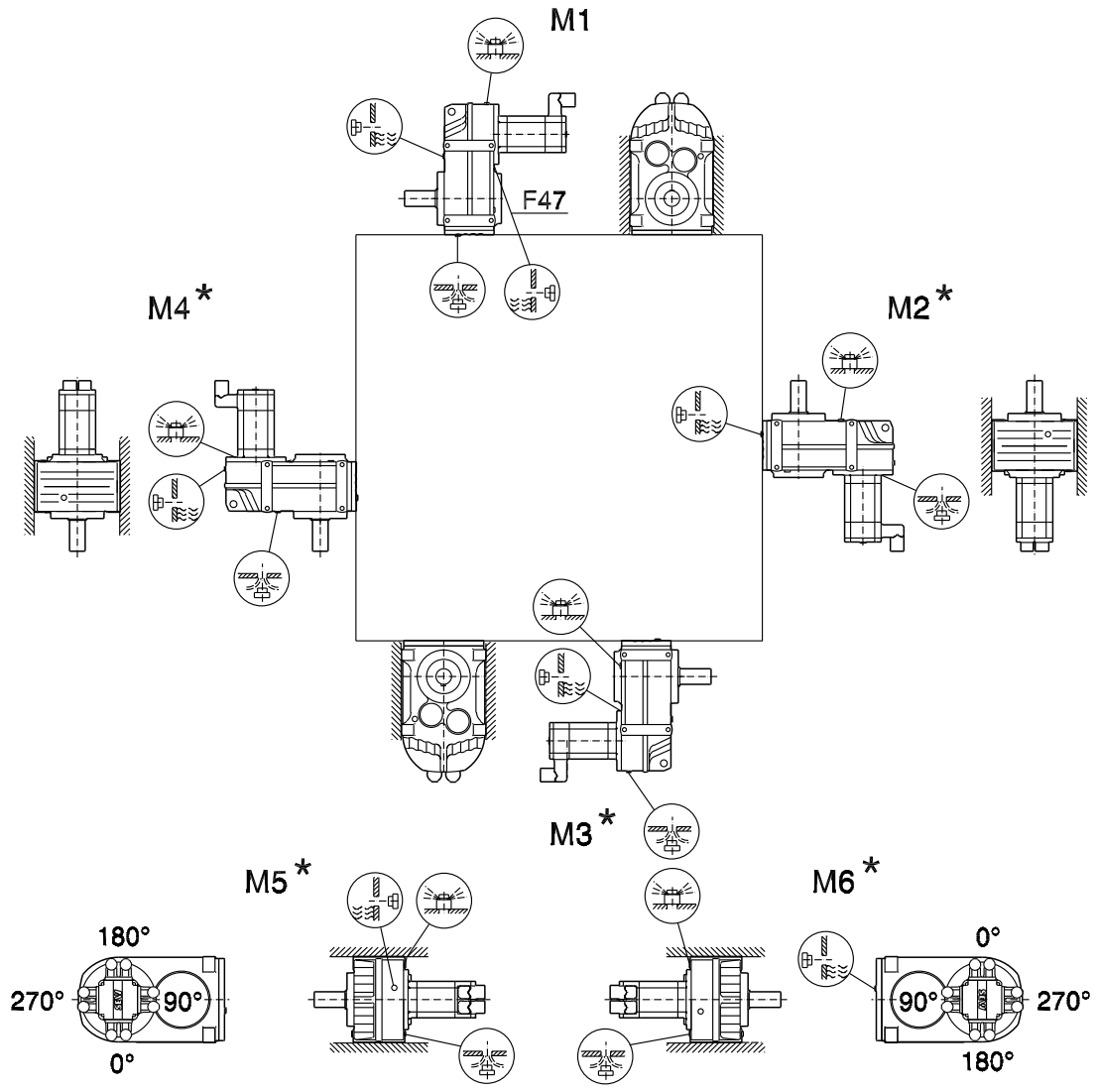

F..27 M1, M3, M5, M6

F..27 M1 - M6

F..27 M1, M3, M5, M6

* → page 77

FF/FAF/FHF/FAZ/FHZ27-157, FVF/FVZ27-107

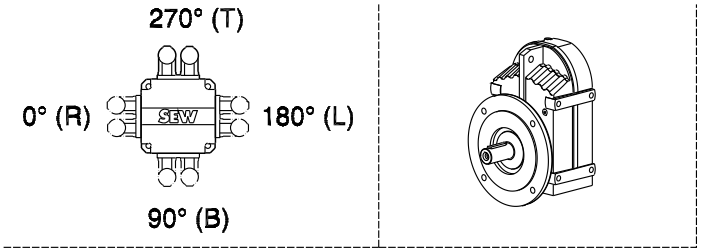

42 198 00 09

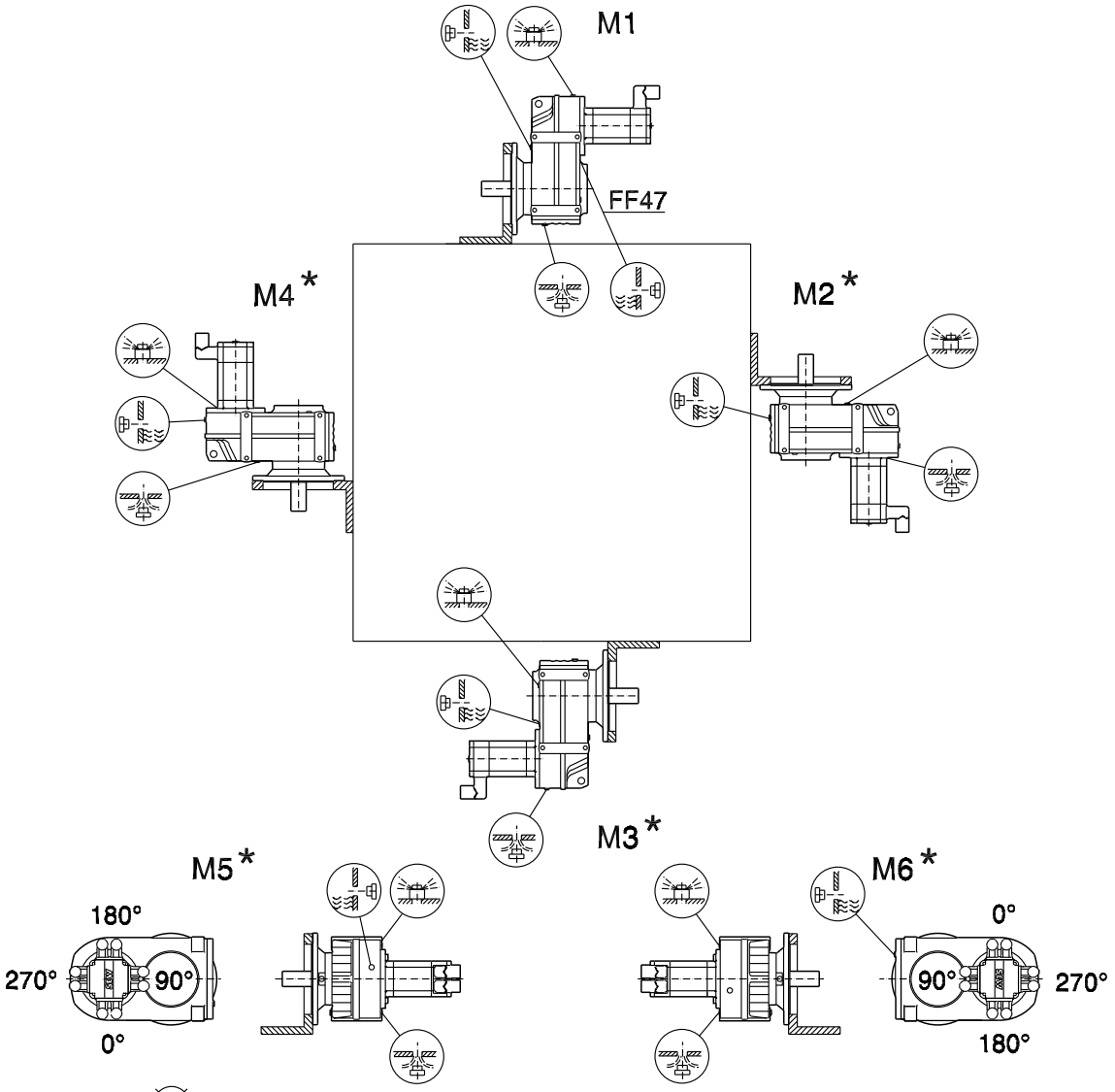

F..27 M1, M3, M5, M6

F..27 M1 - M6

F..27 M1, M3, M5, M6

* → page 77

FA/FH27-157, FV27-107, FT37-97

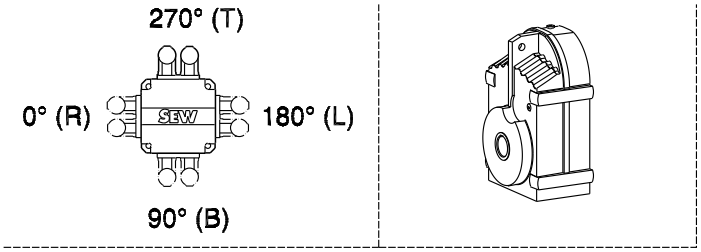

42 199 00 09

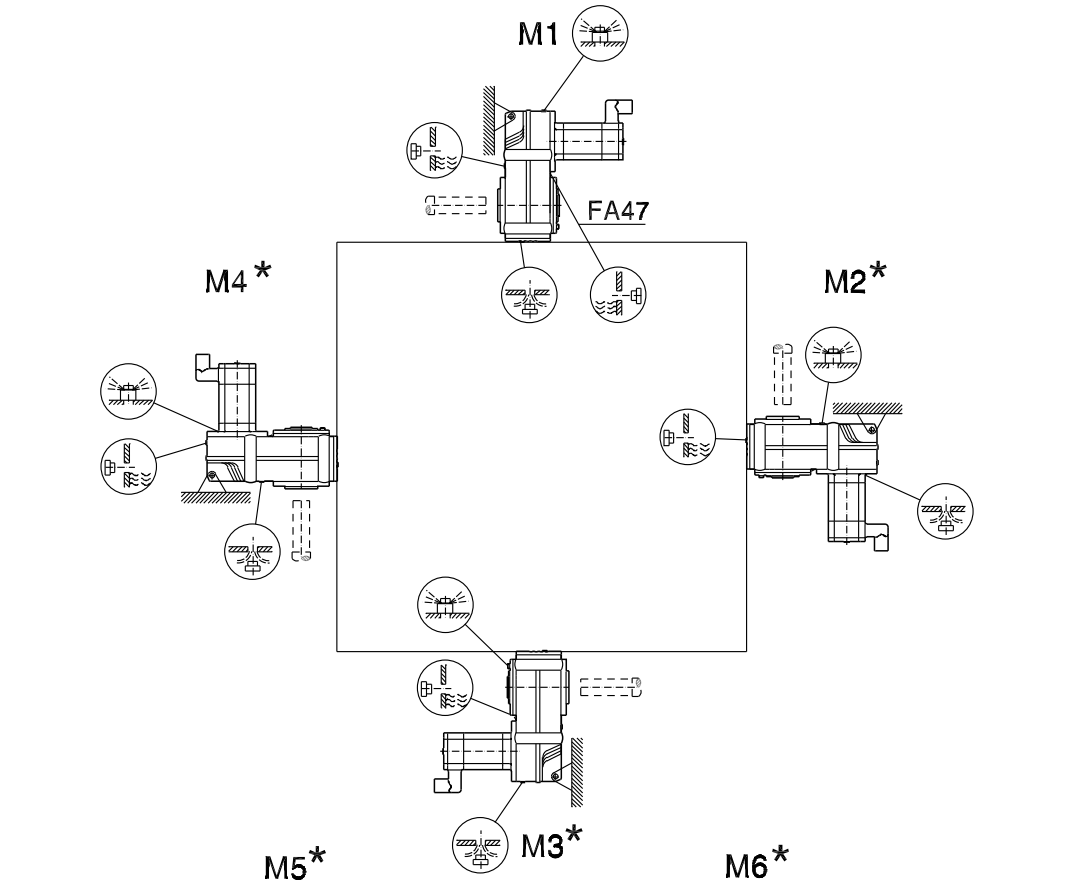

F..27 M1, M3, M5, M6

F..27 M1 - M6

F..27 M1, M3, M5, M6

* → page 77

5.9 Mounting positions of helical-bevel gearmotors K

K/KA..B/KH37B-157B, KV37B-107B

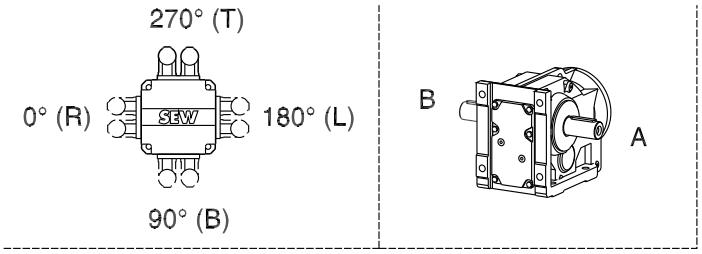

33 212 00 09

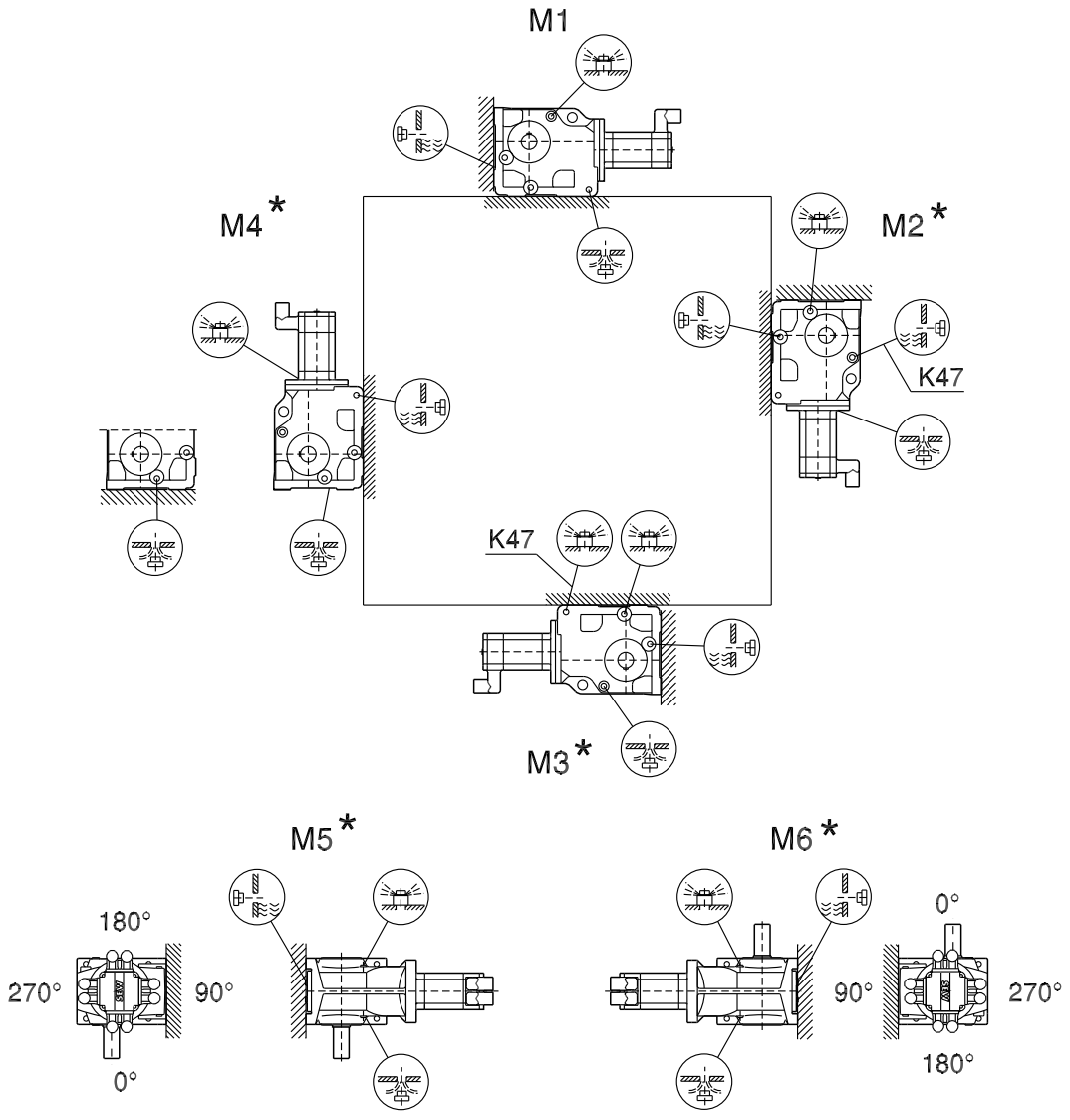

* → page 77

Note: Observe the notes in chapter "Project planning for gear units/Overhung and axial loads" (page 50).

KF/KAF/KHF/KAZ/KHZ37-157, KVF/KVZ37-107

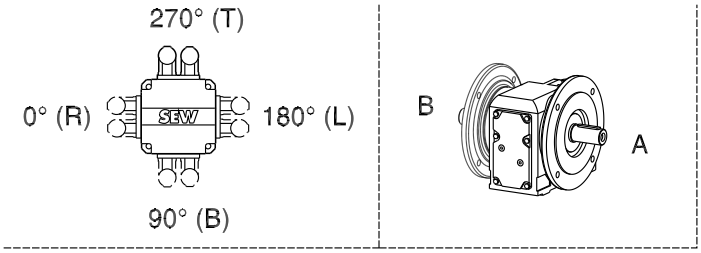

33 213 00 09

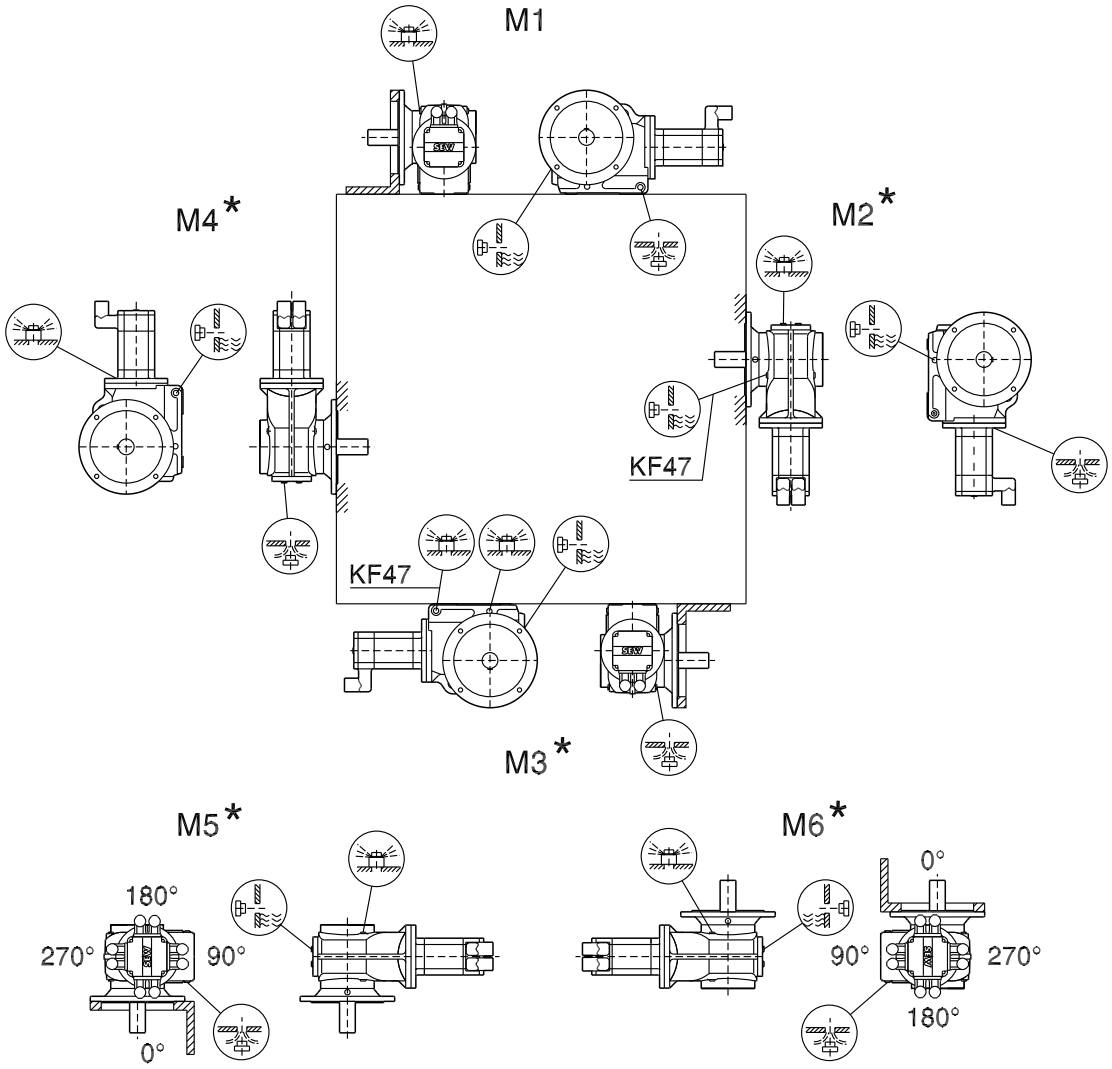

* → page 77

KA/KH37-157, KV37-107, KT37-97

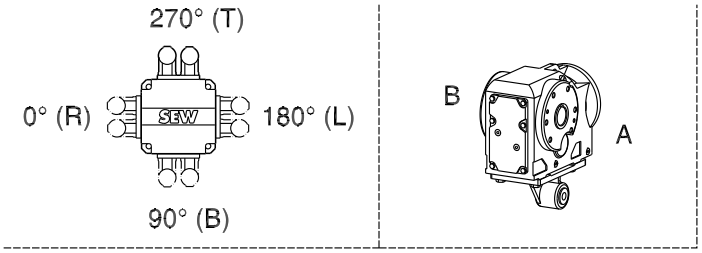

33 214 00 09

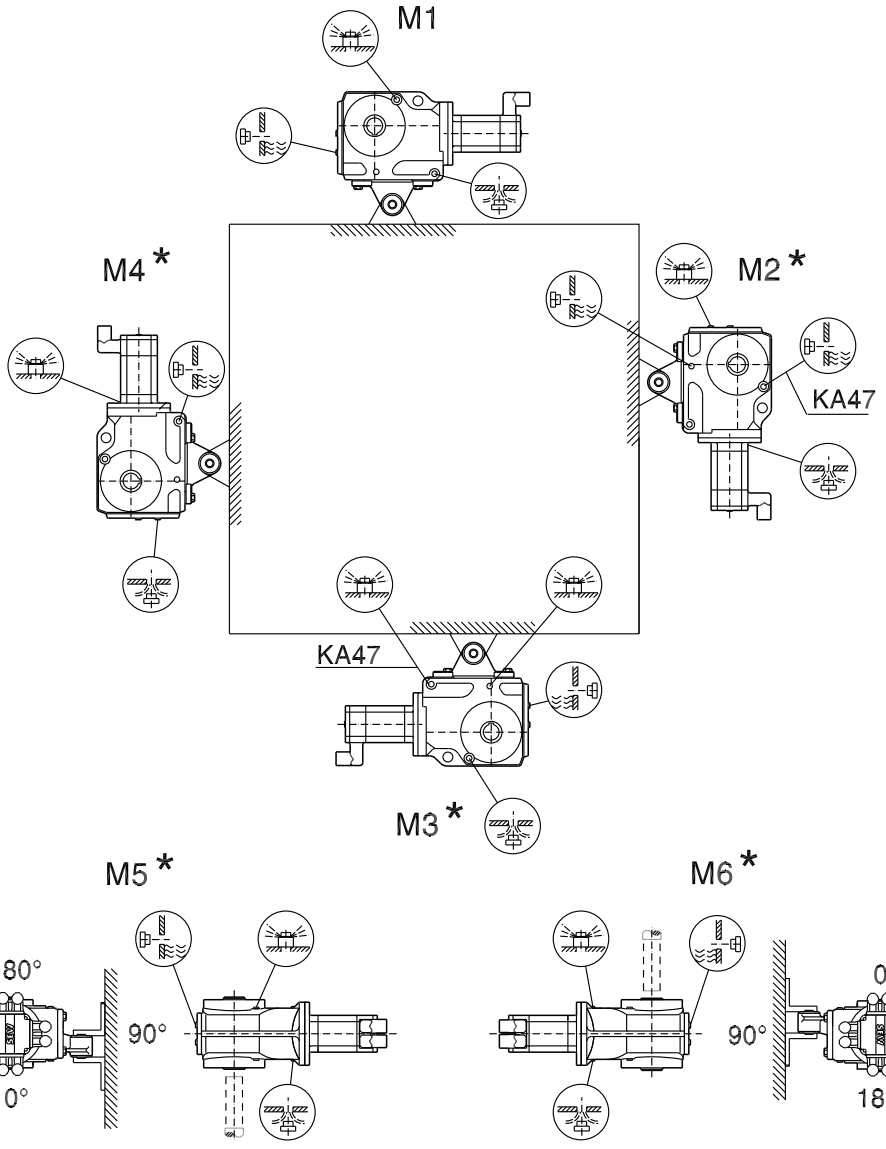

* → page 77

5.10 Mounting positions of helical-worm gearmotors S

S37

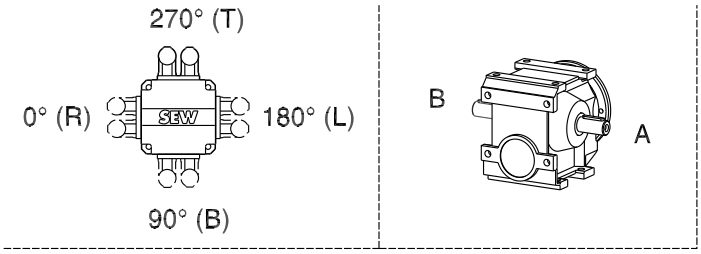

02 117 00 09

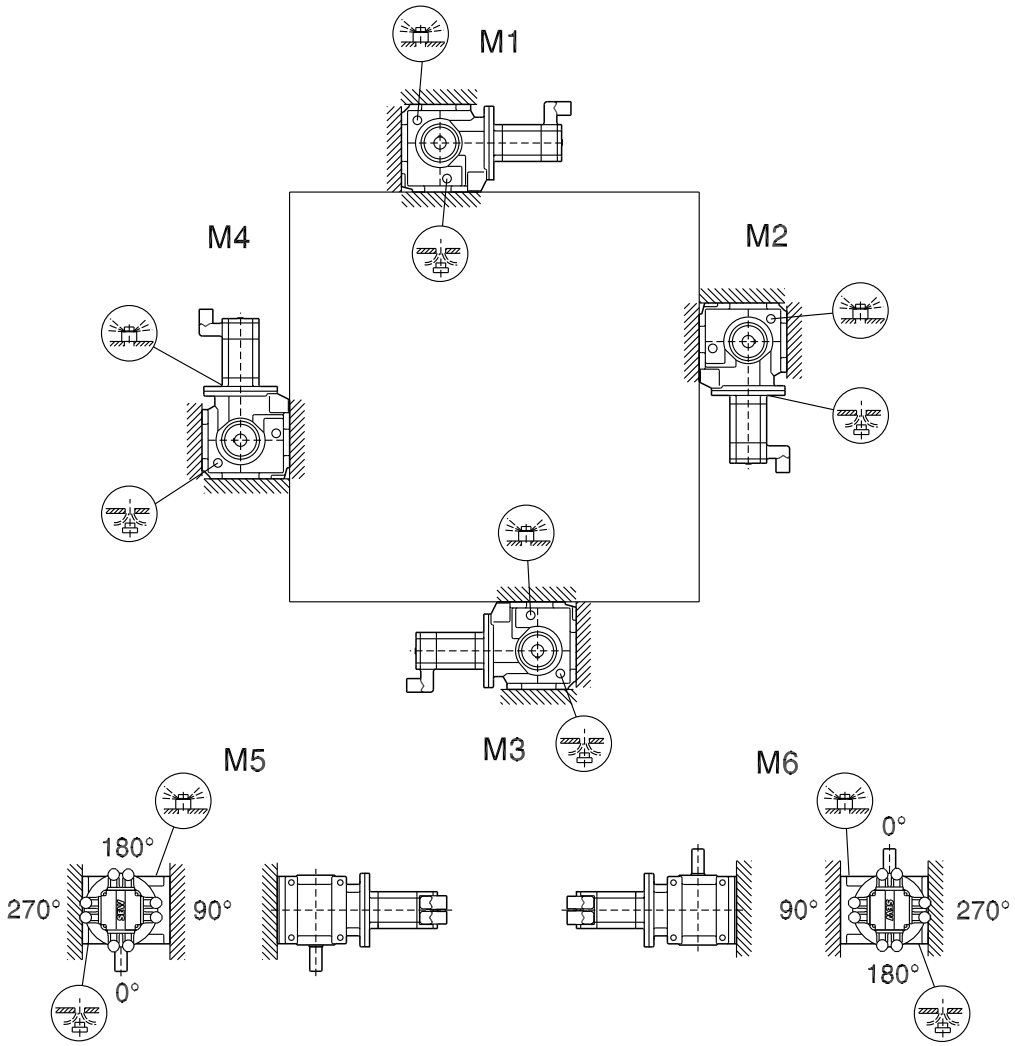

* → page 77

Note: Observe the notes in chapter "Project planning for gear units/Overhung and axial loads" (page 50).

S47-S97

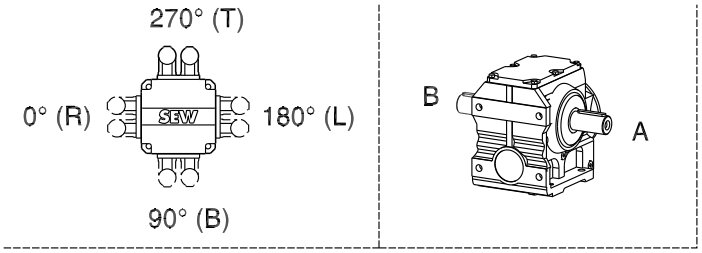

02 118 00 09

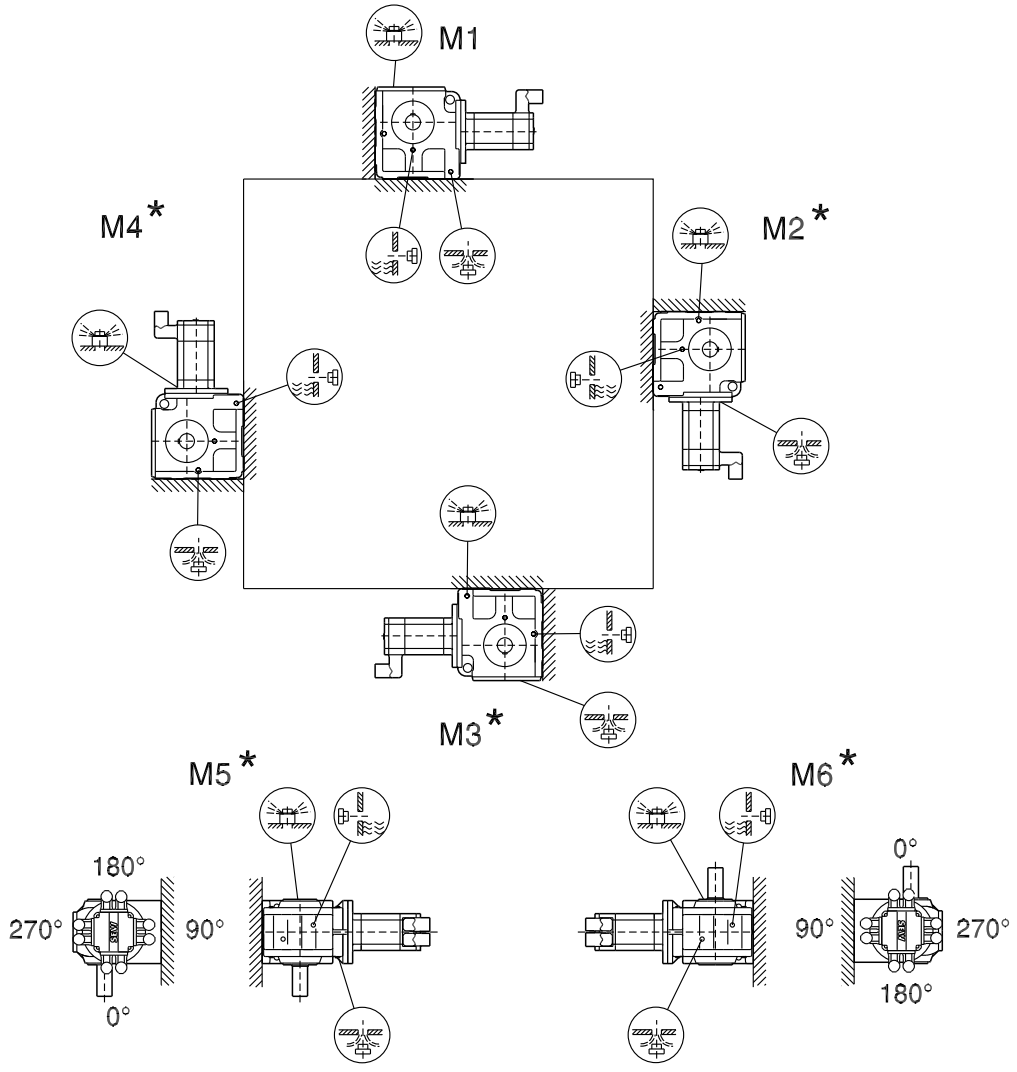

* → page 77

Note: Observe the notes in chapter "Project planning for gear units/Overhung and axial loads" (page 50).

SF/SAF/SHF37

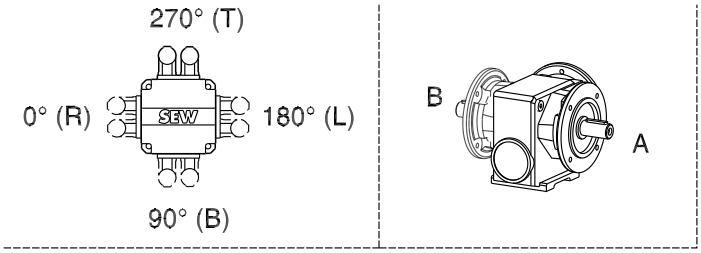

02 119 00 09

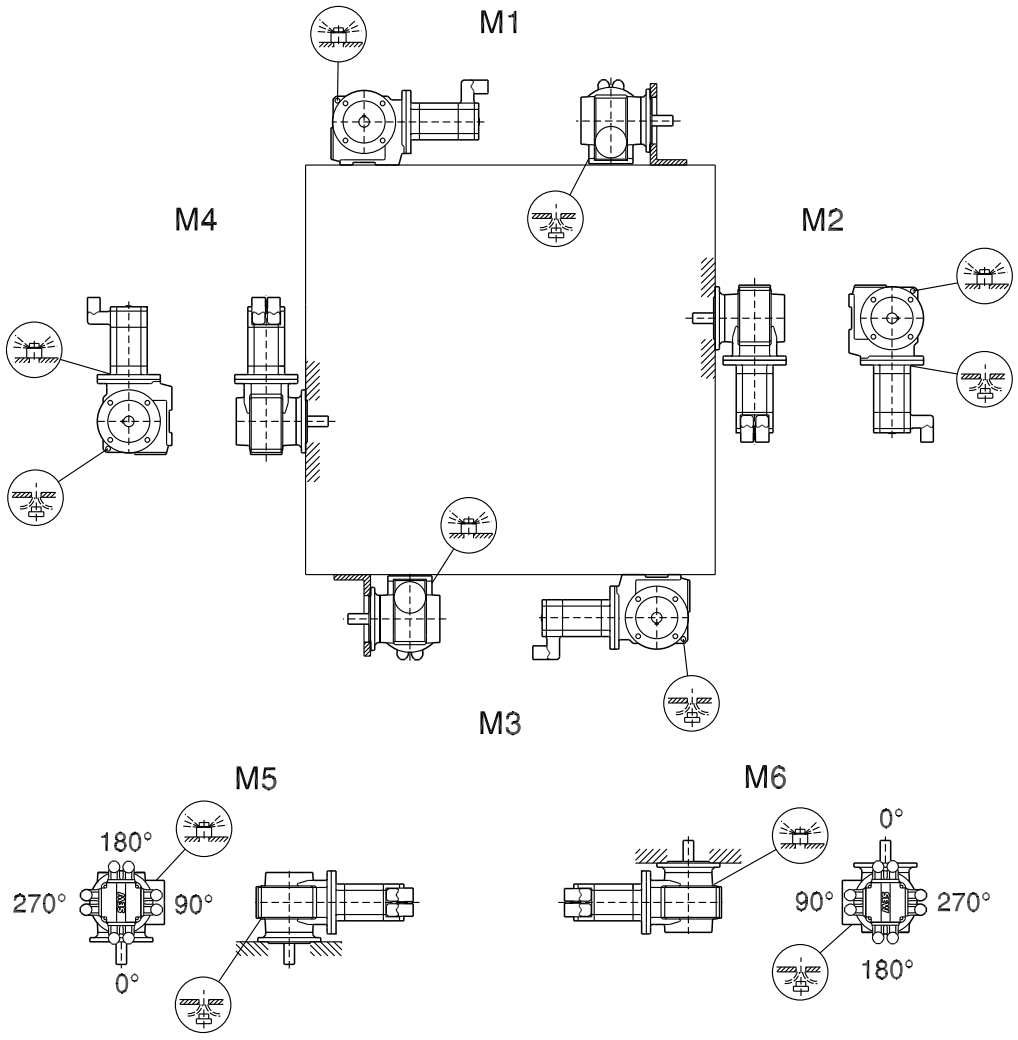

* → page 77

SF/SAF/SHF/SAZ/SHZ47-97

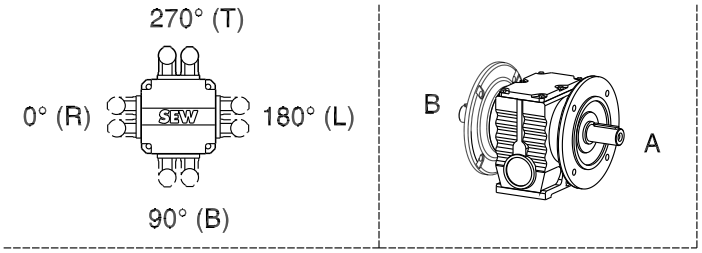

02 120 00 09

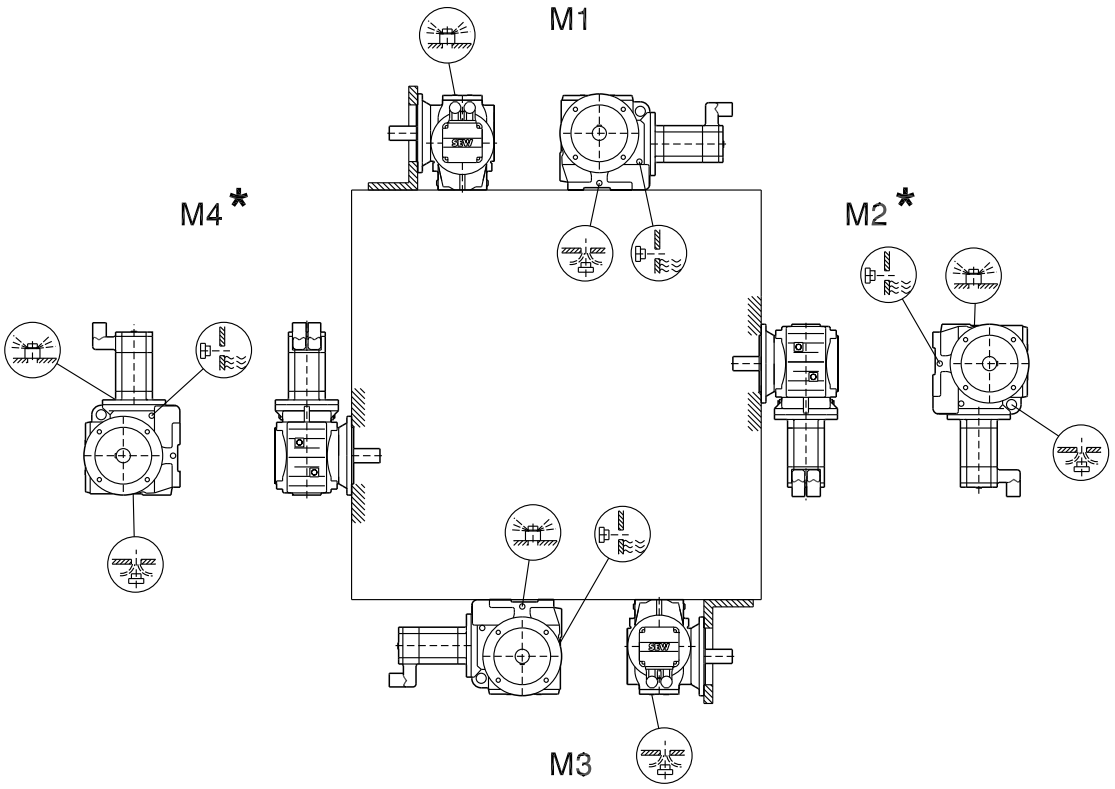

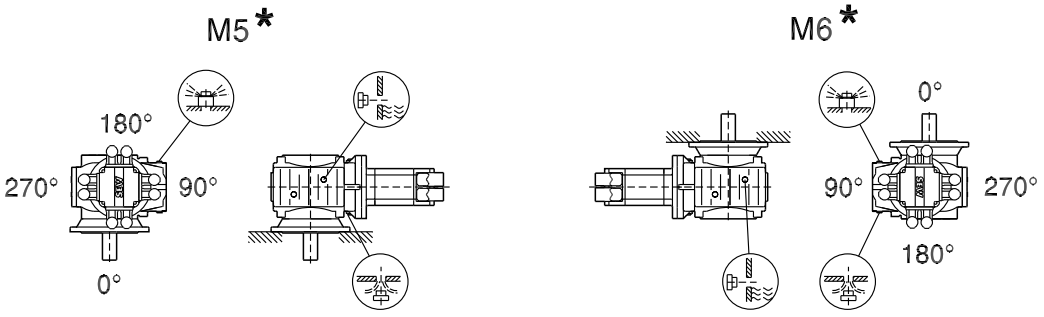

* → page 77

SA/SH/ST37

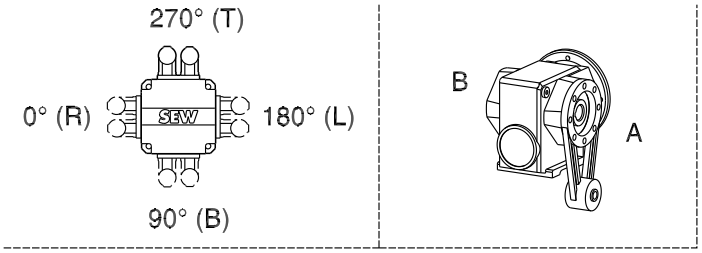

02 121 00 09

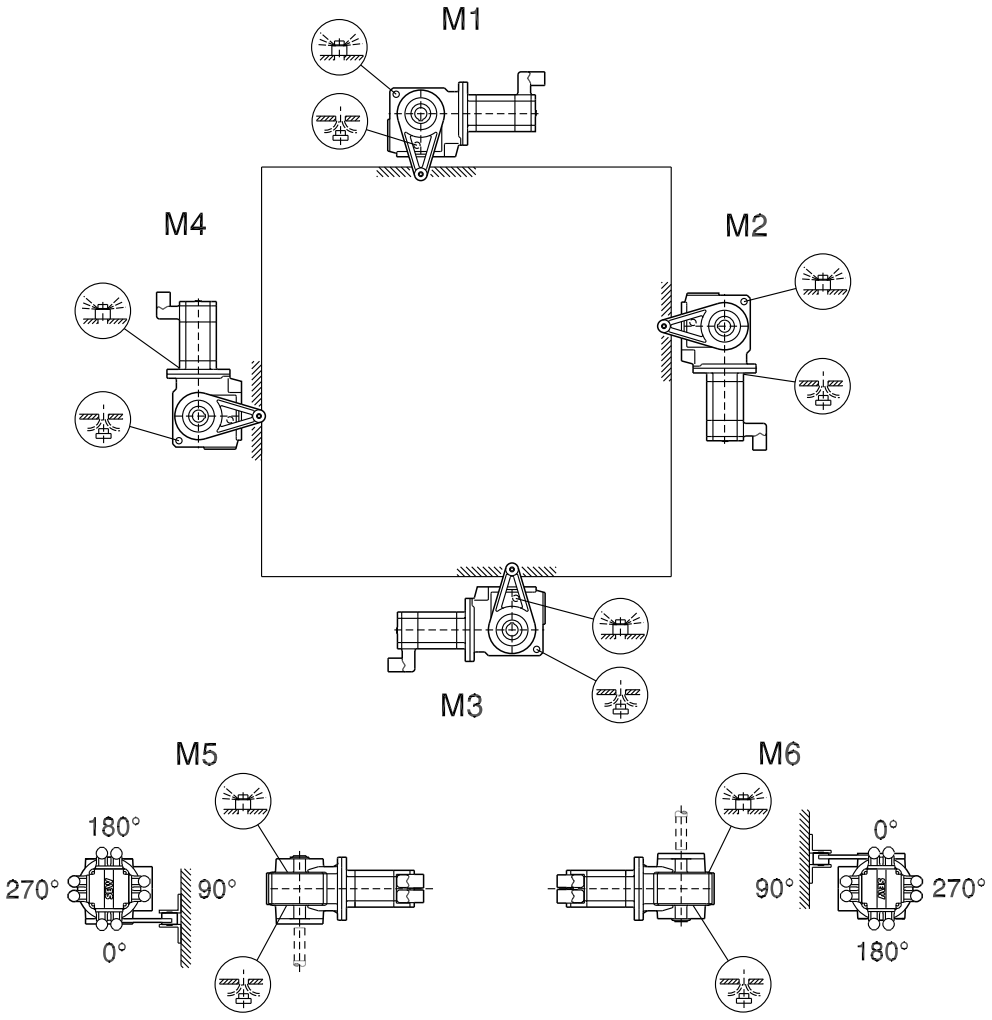

* → page 77

SA/SH/ST47-97

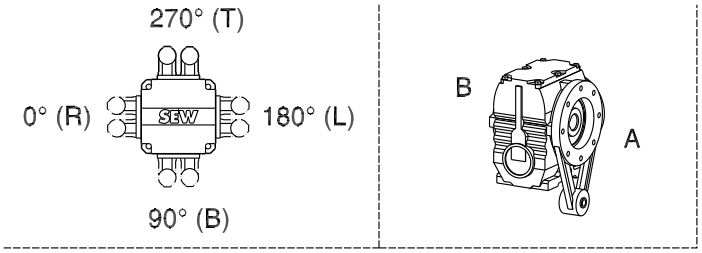

02 122 00 09

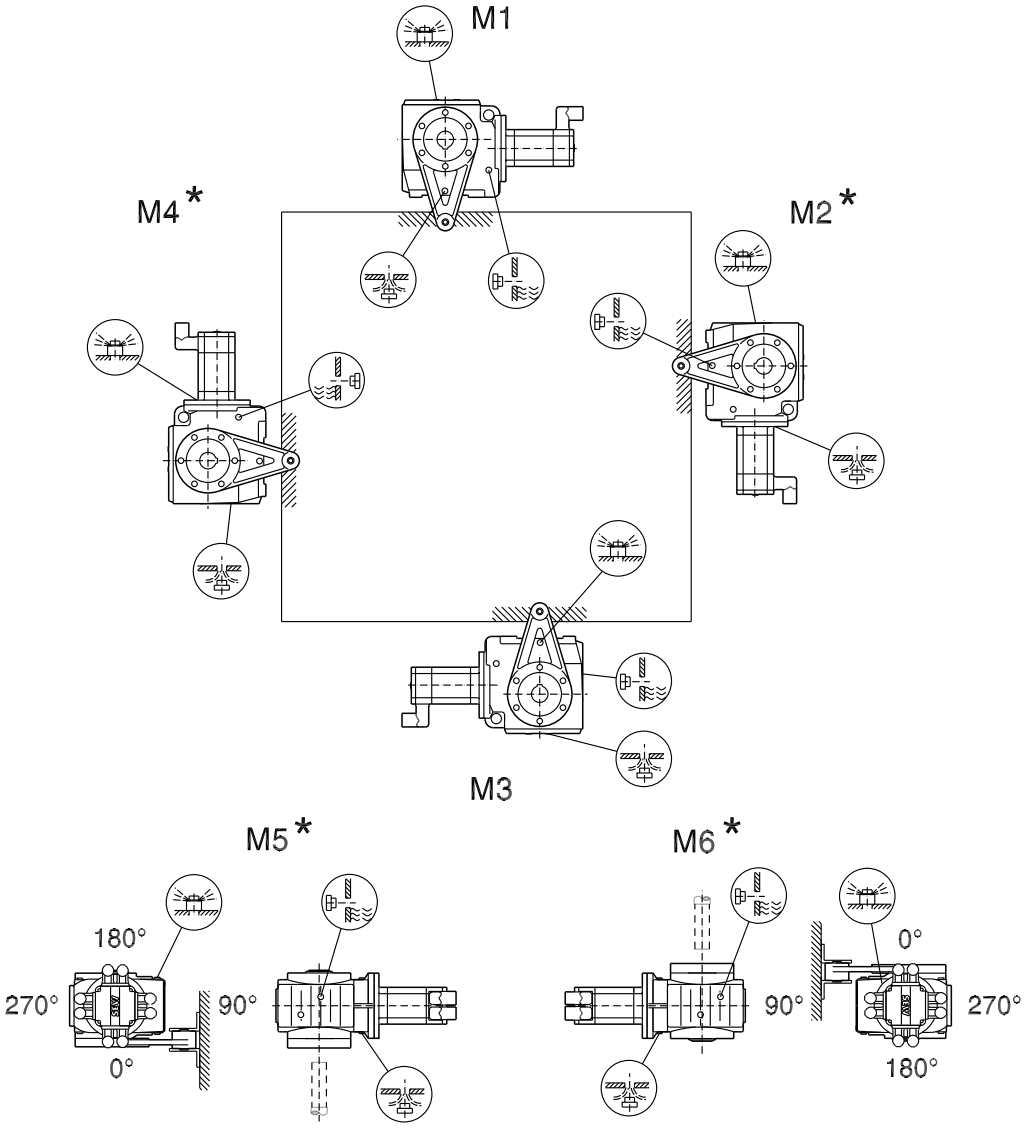

* → page 77

5.11 Mounting positions of SPIROPLAN® gearmotors W

W/WA37-47B

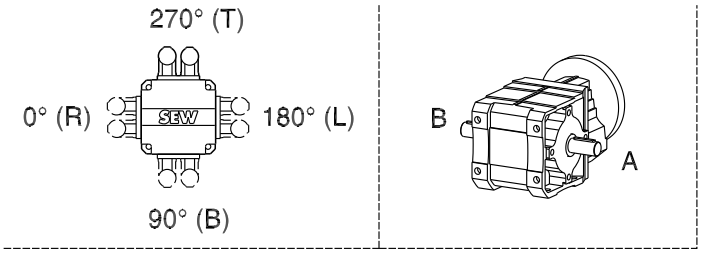

20 072 00 09

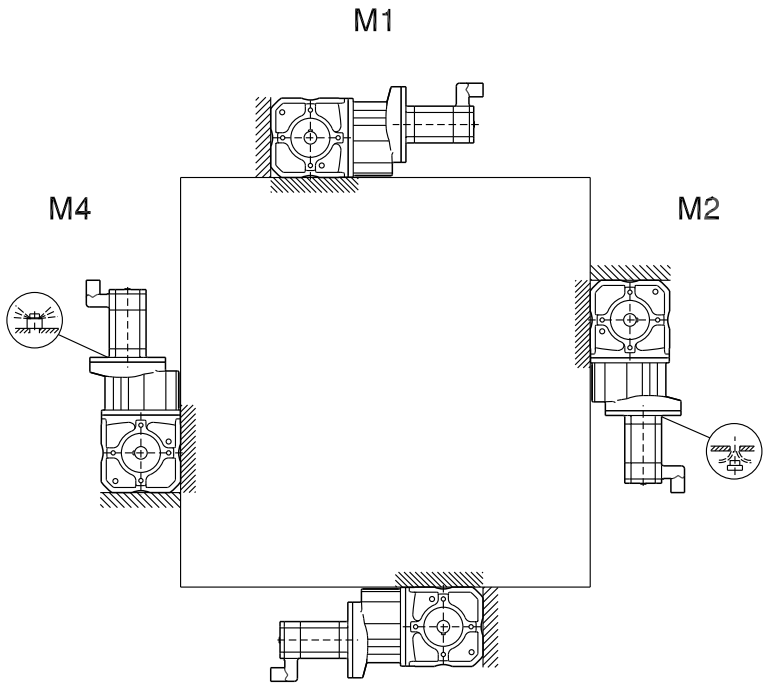

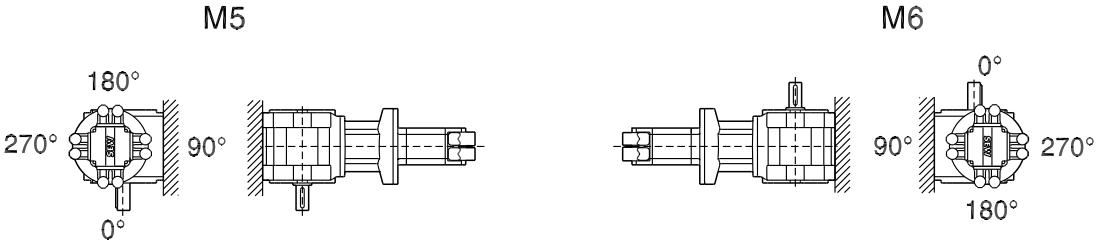

* → page 77

WF/WAF/WHF37-47

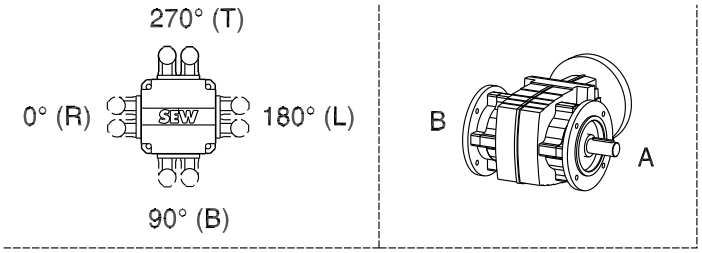

20 073 00 09

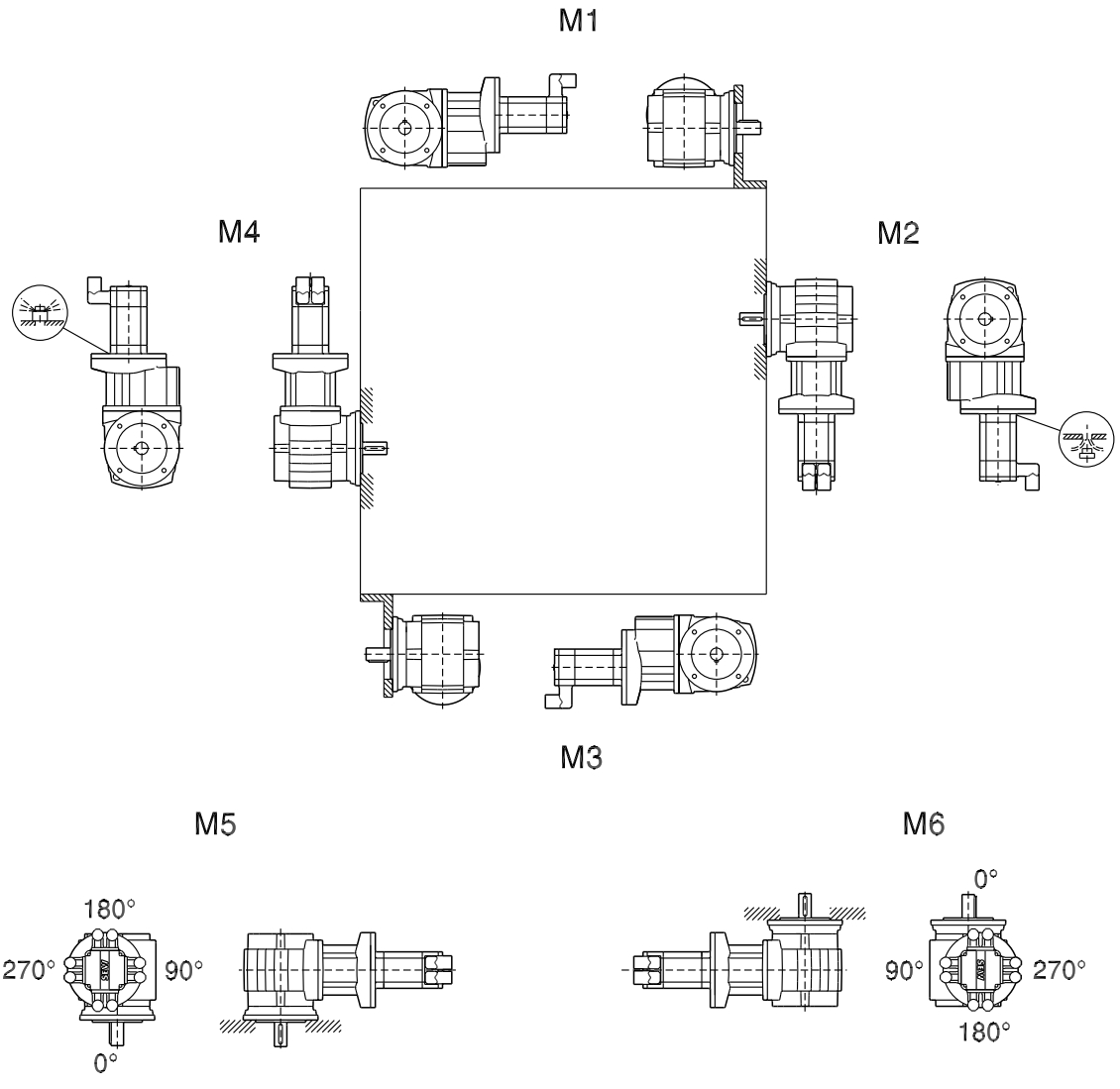

* → page 77

WA/WH/WT37-47

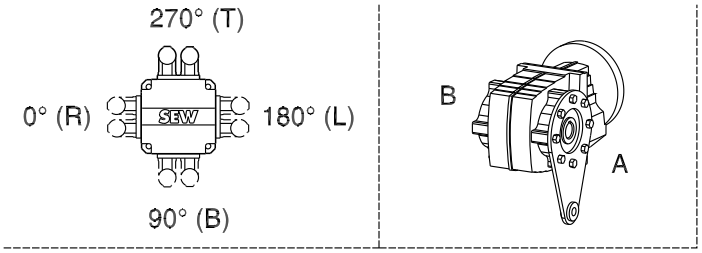

20 074 00 09

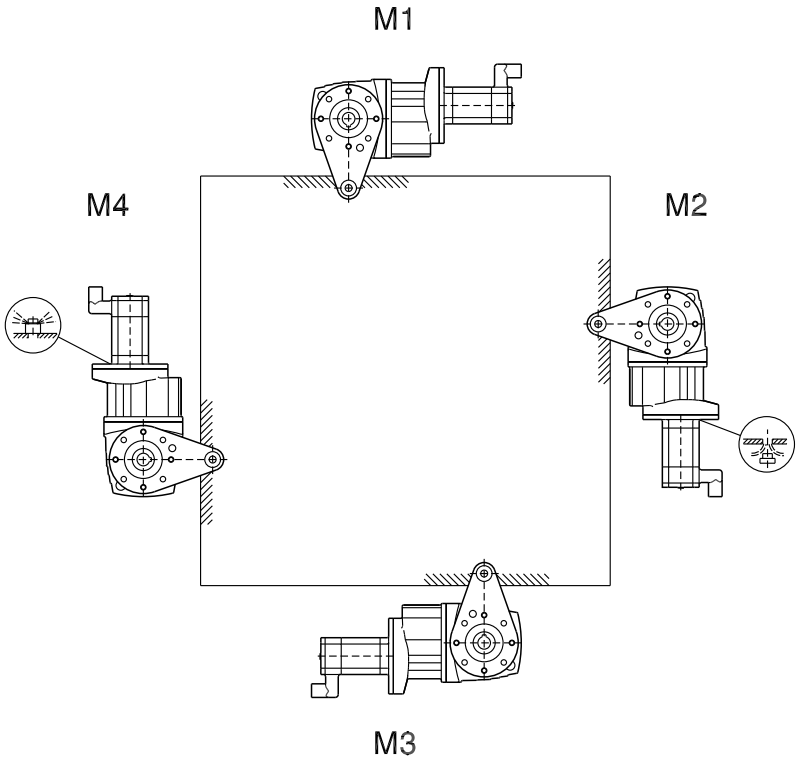

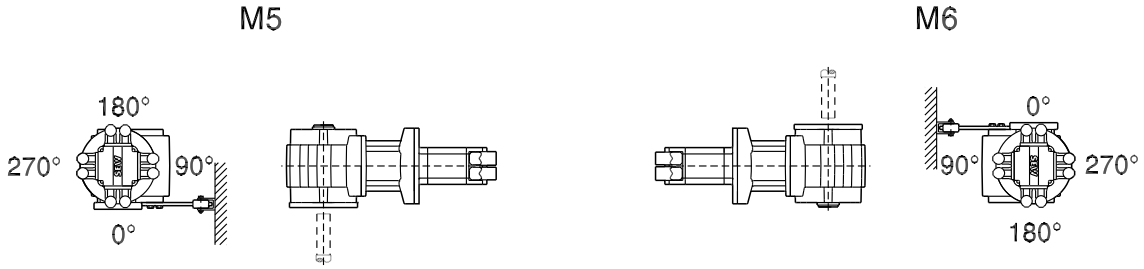

* → page 77

5.12 Mounting positions of helical-bevel servo gearmotors BSF

BSF202-802

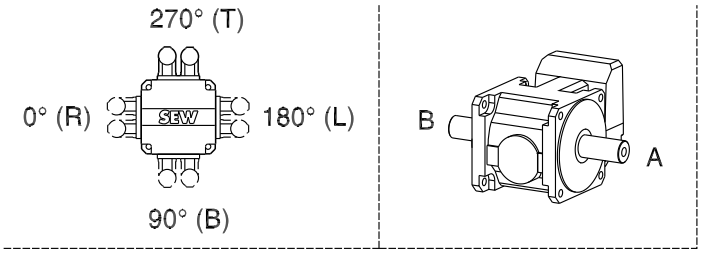

56 037 01 03

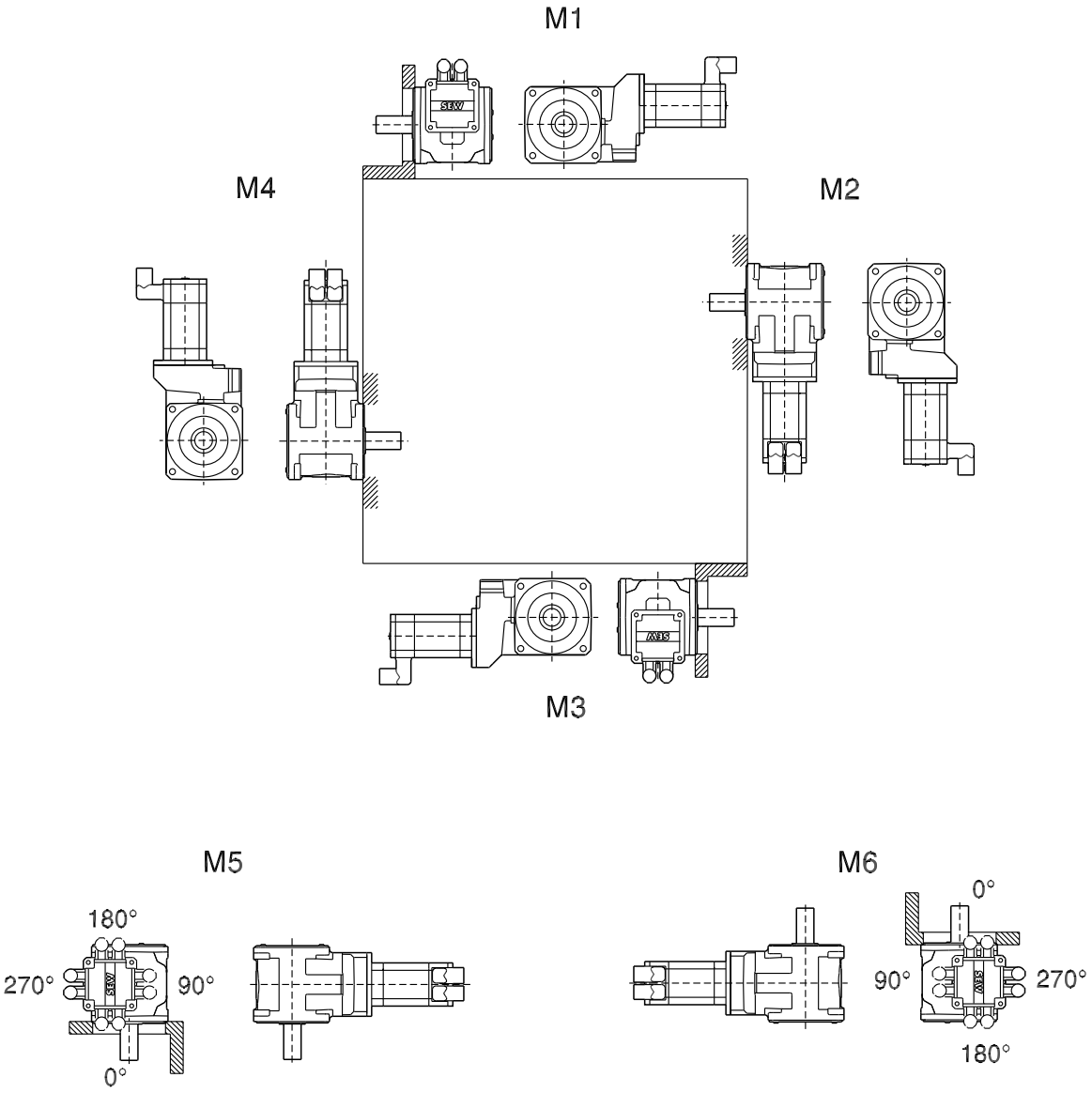

* → page 77

BSBF202-802

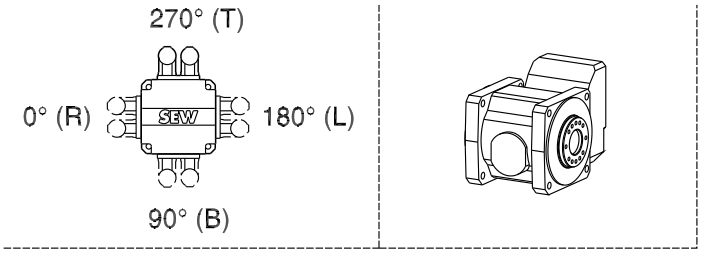

56 038 01 03

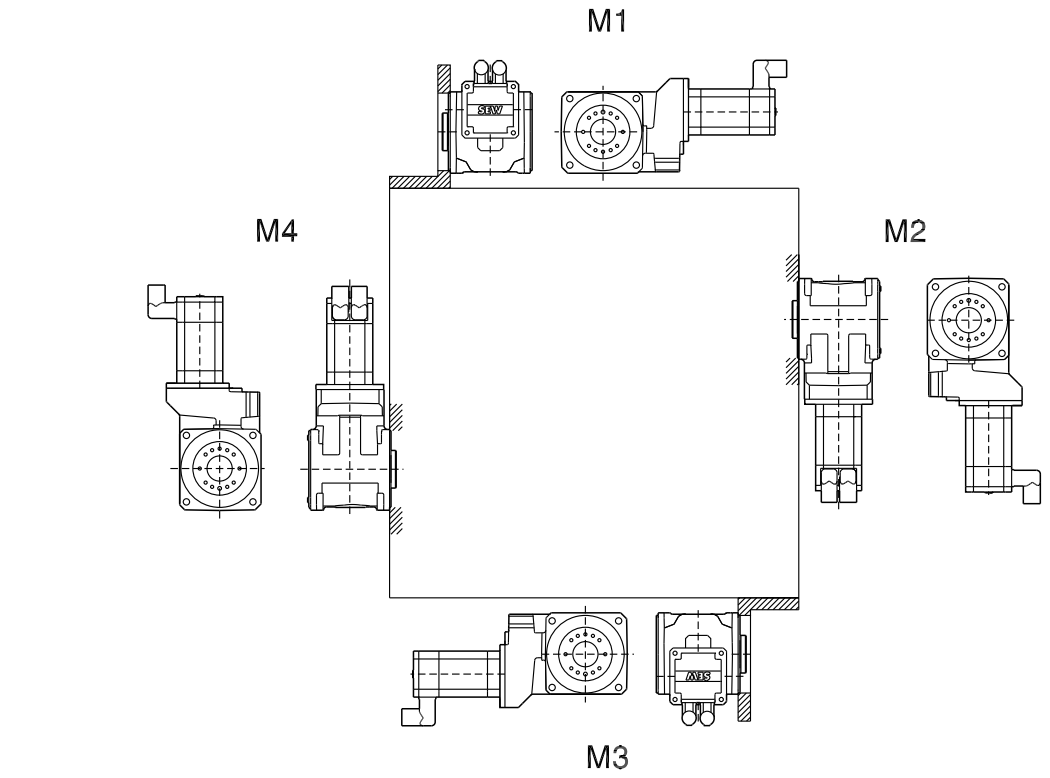

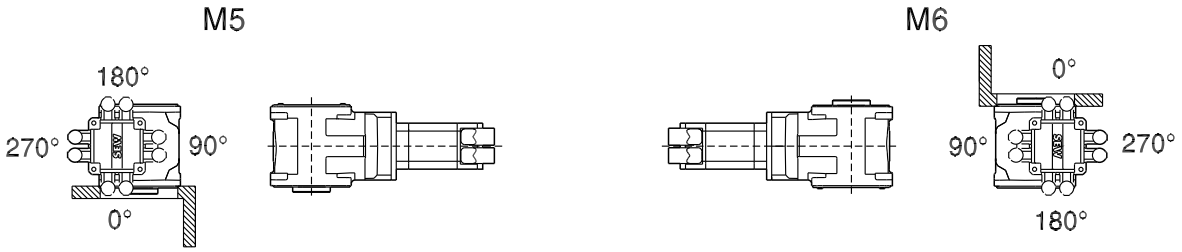

* → page 77

BSHF202-802

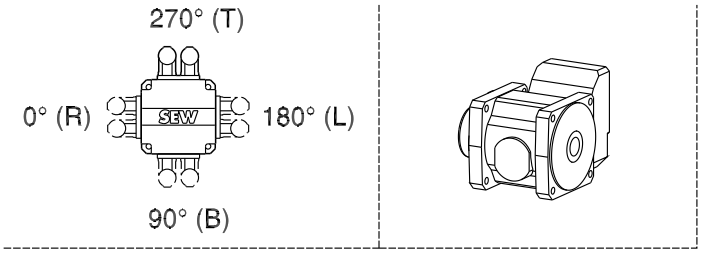

56 056 01 03

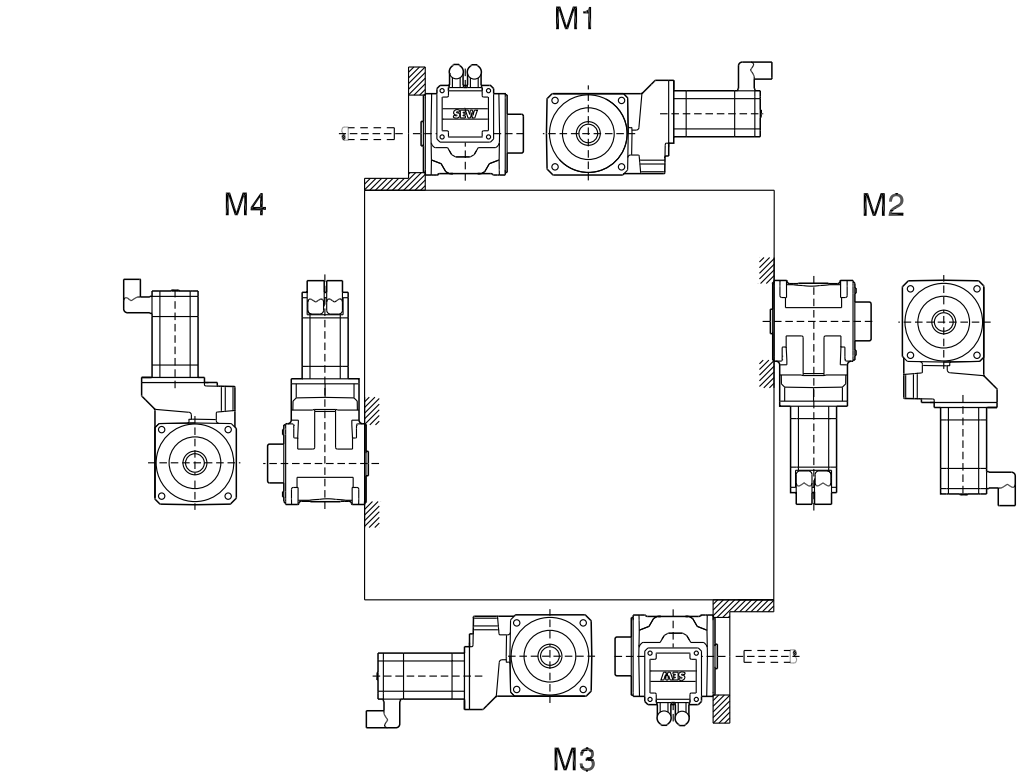

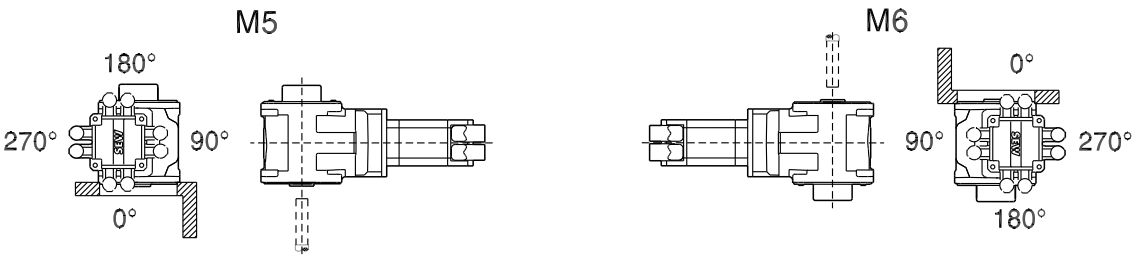

* → page 77

BSHF202-802 /I

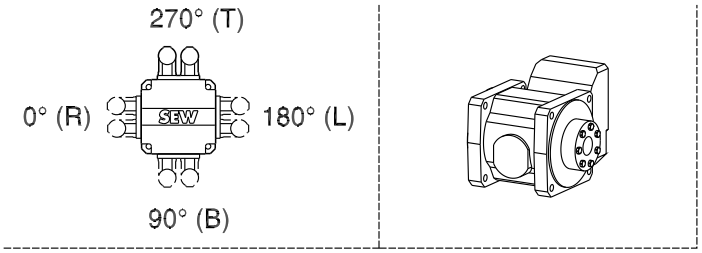

56 039 01 03

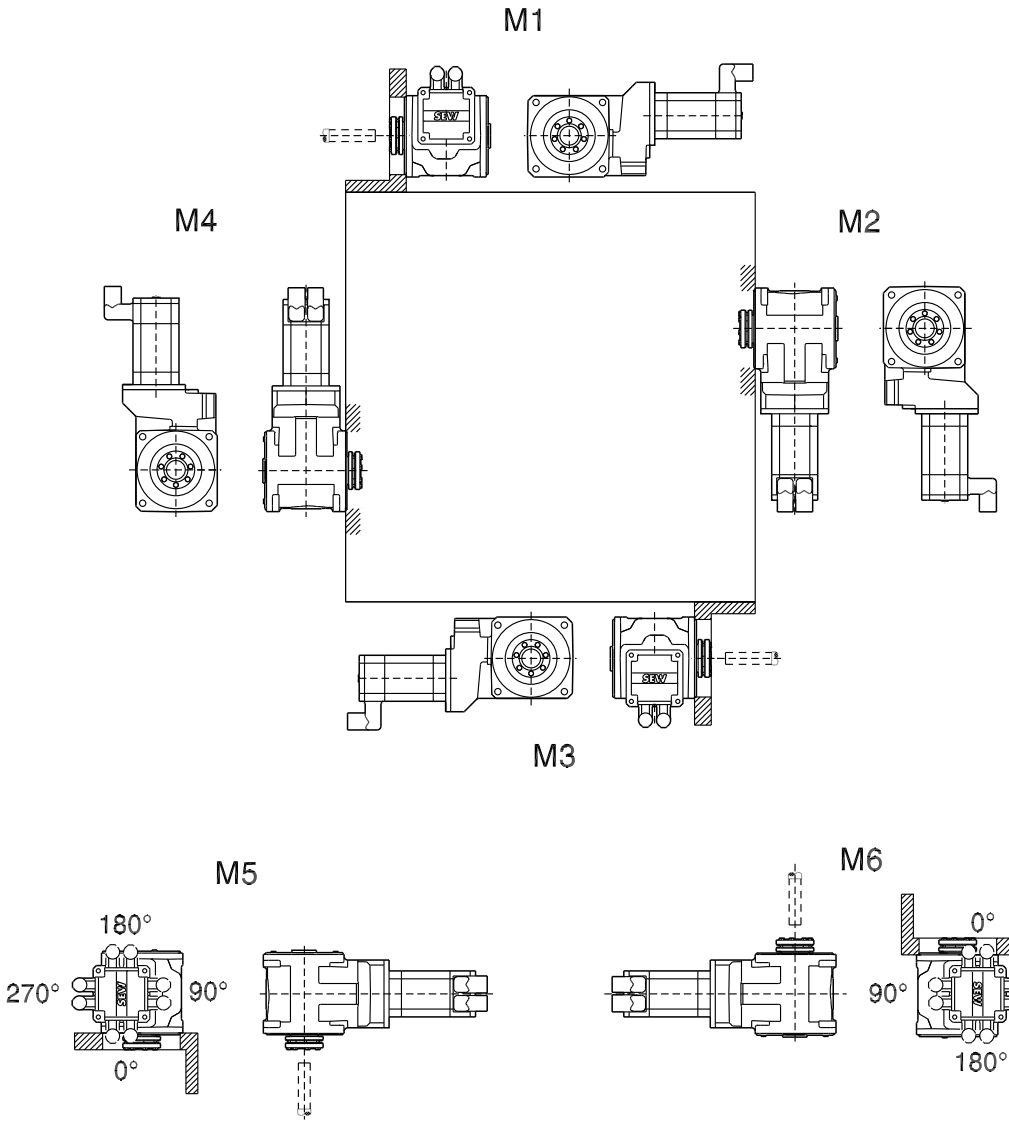

* → page 77

BSHF202-802 /T

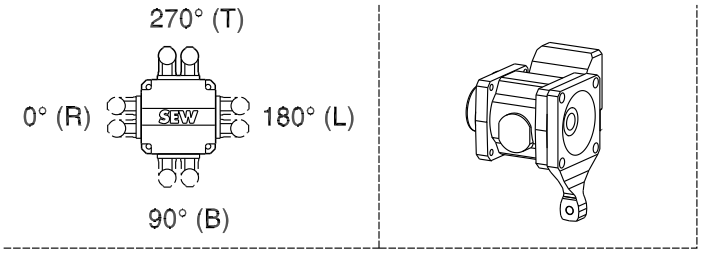

56 043 01 03

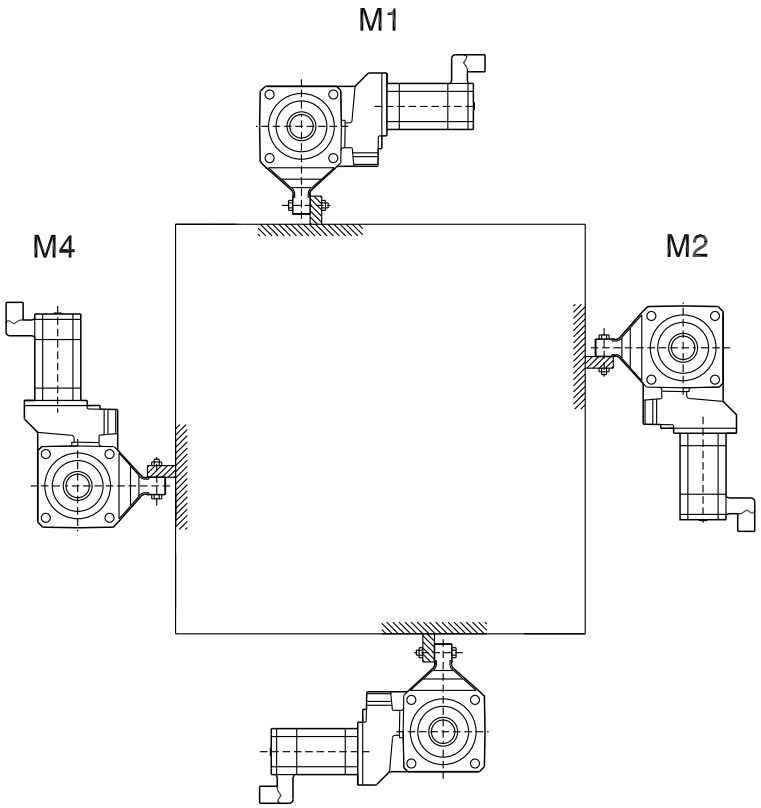

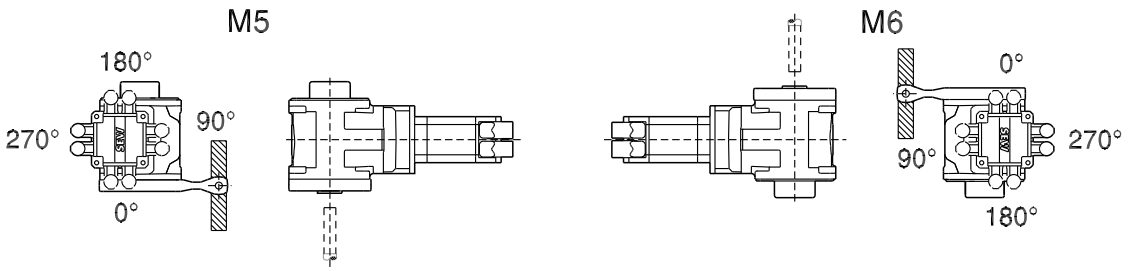

* → page 77

BSF202B-802B

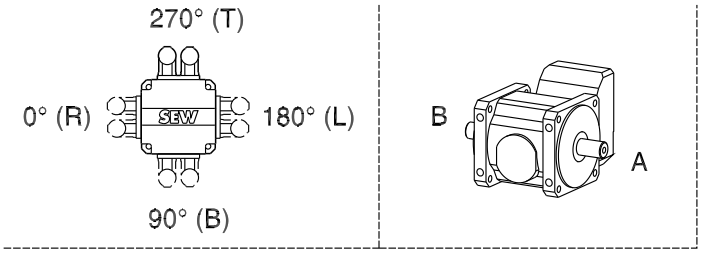

56 040 01 03

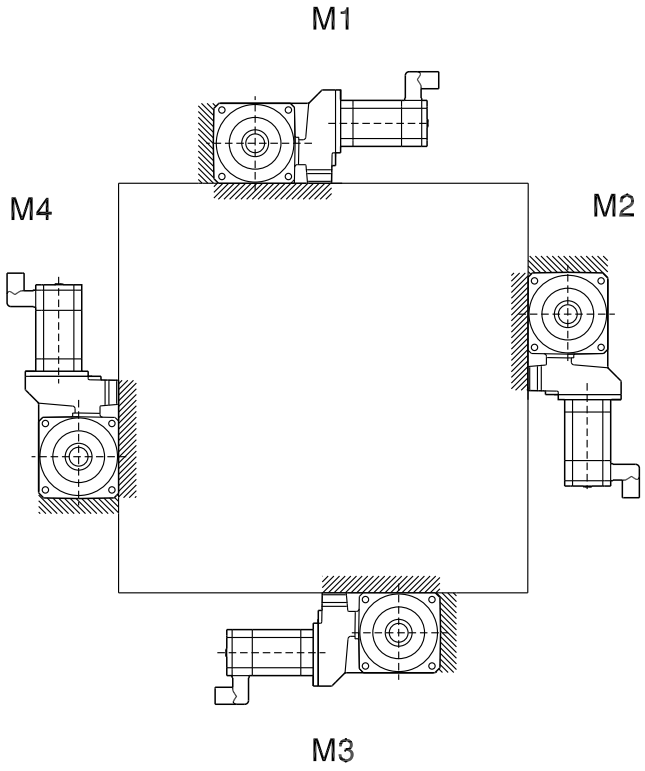

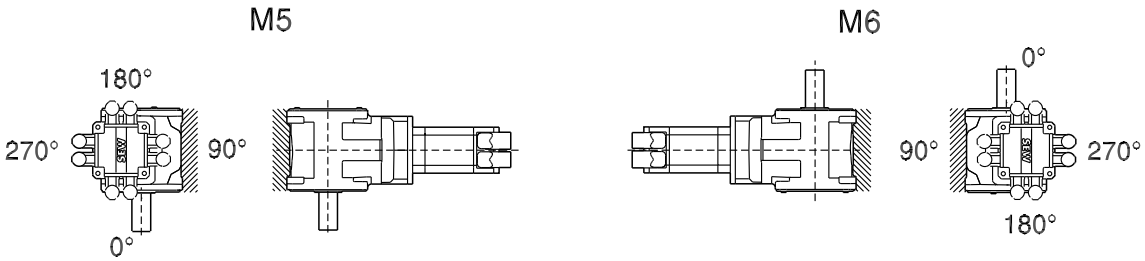

* → page 77

BSBF202B-802B

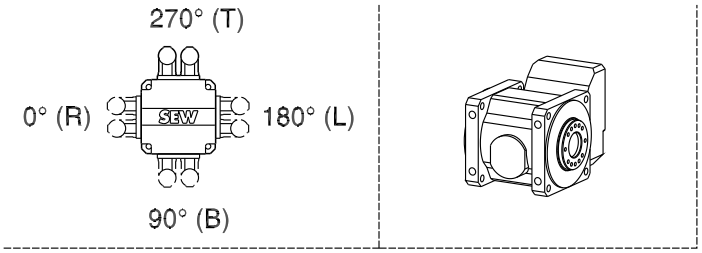

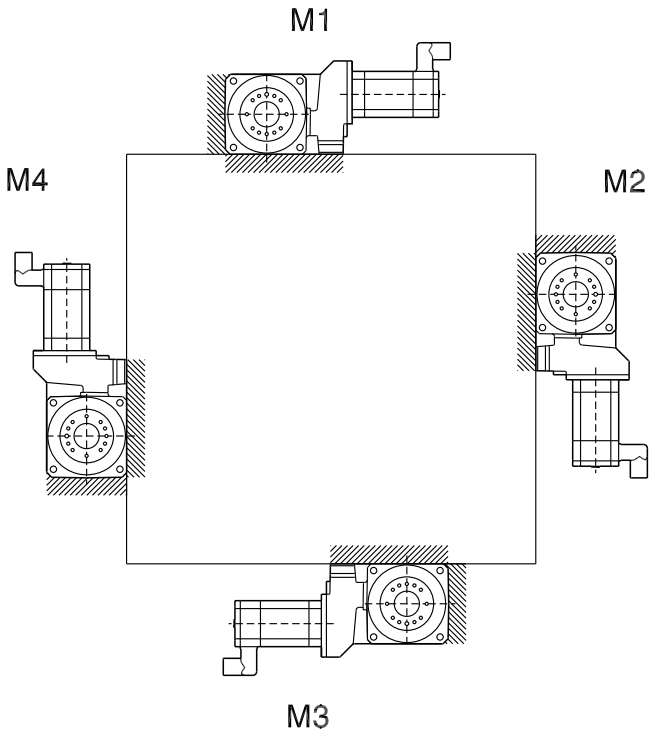

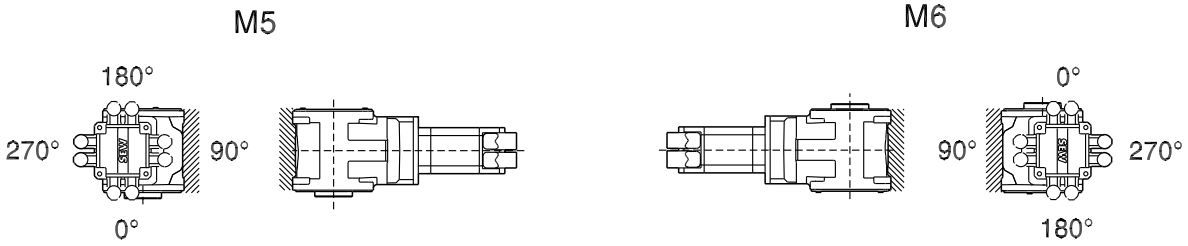

* → page 77

BSHF202B-802B

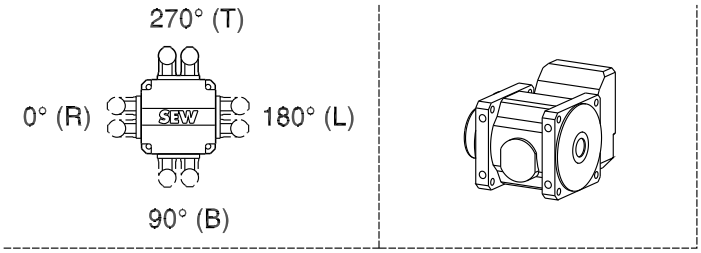

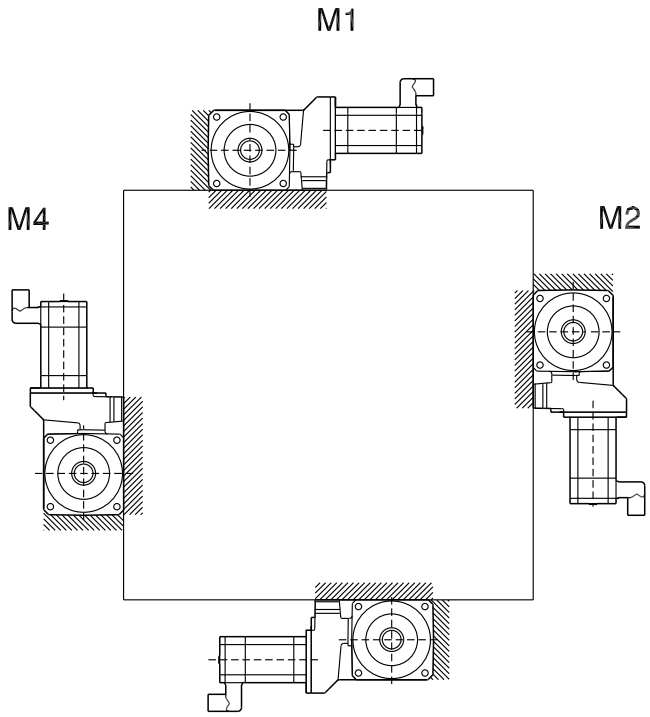

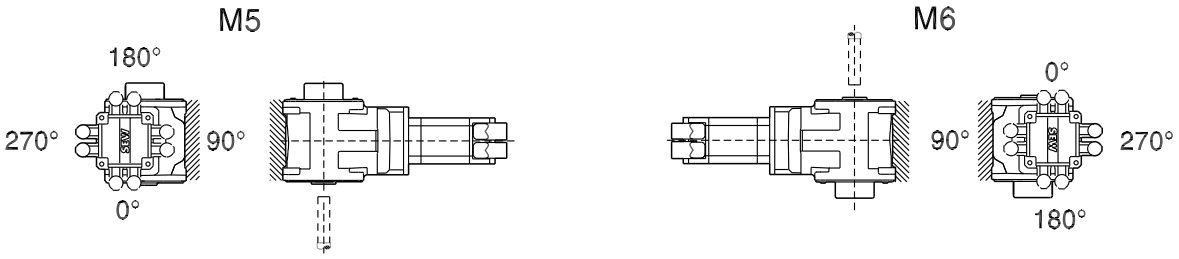

* → page 77

BSHF202B-802B /I

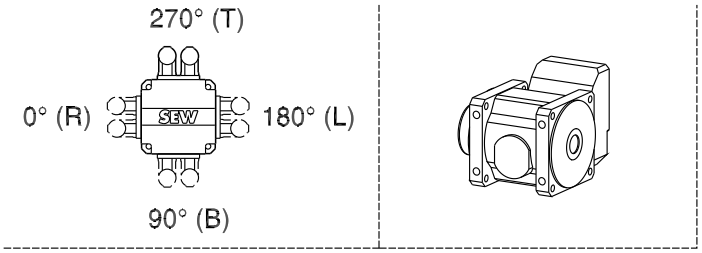

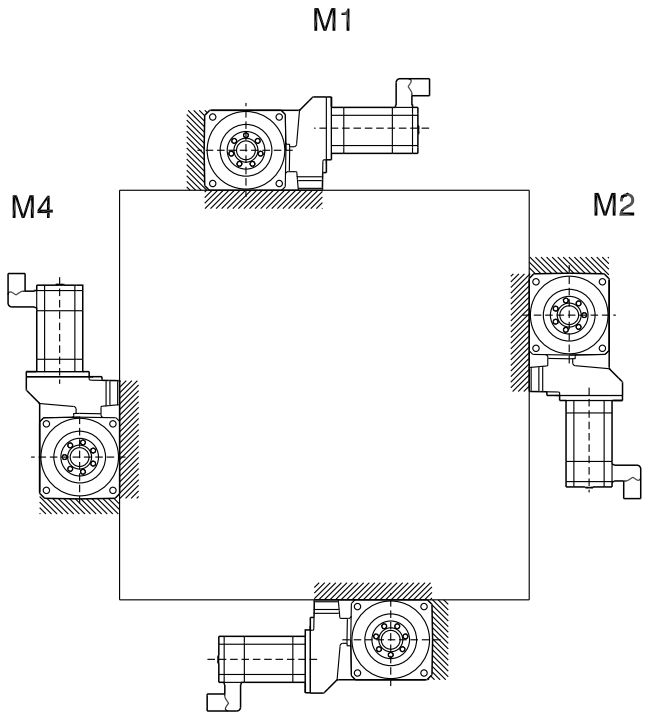

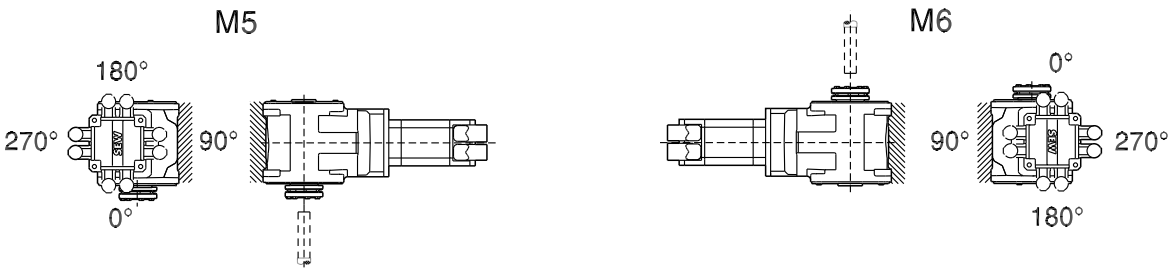

* → page 77

5.13 Mounting positions of planetary servo gearmotors PSF, PSC

PS.F121...922 / PS.C221...622

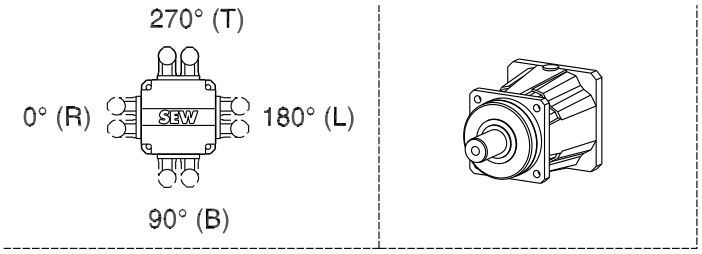

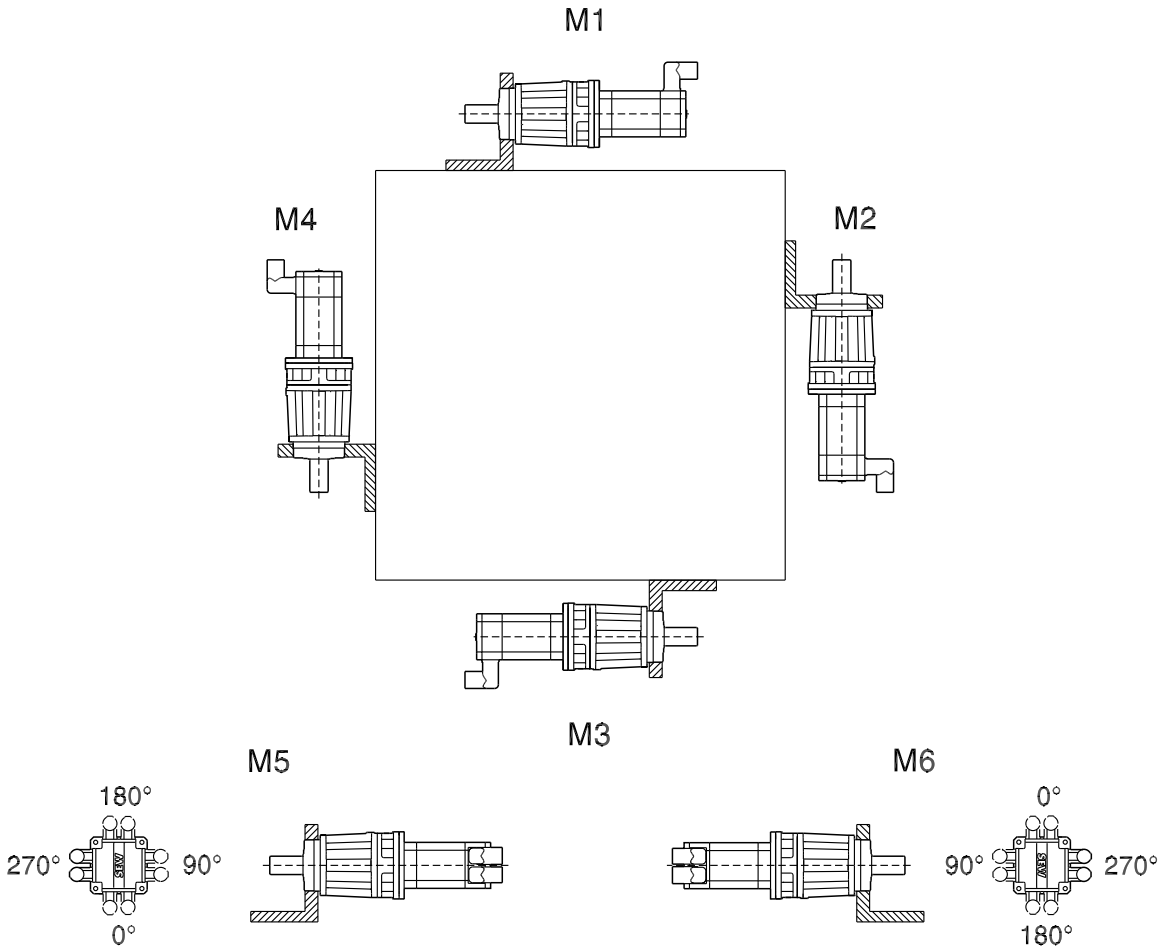

* → page 77

PSBF121-922

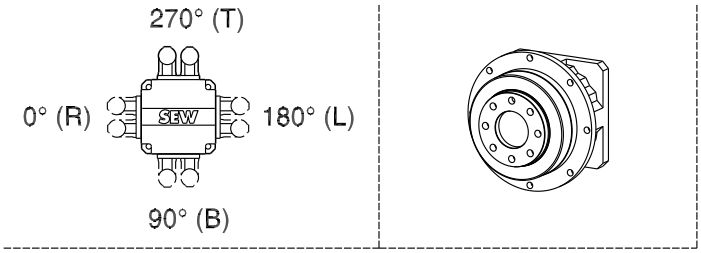

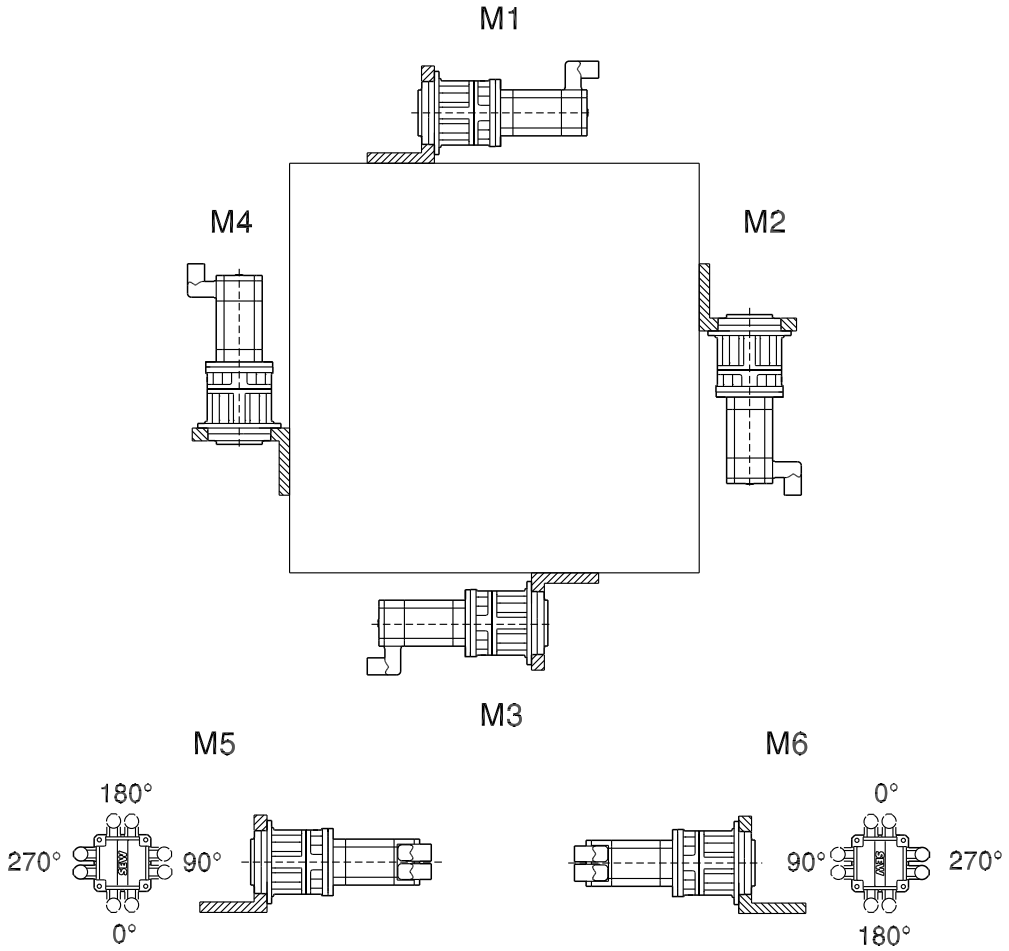

* → page 77

6 Design and Operating Notes

6.1 Reduced backlash gear unit types

Helical, parallel shaft helical and helical-bevel gear units with reduced backlash are available as of gear unit size 37. The circumferential backlash of these gear units is considerably less than that of the standard versions so that positioning tasks can be solved with great precision. The circumferential backlash is specified in angular minutes ['] in the technical data. The circumferential backlash for the output shaft is specified without load (max. 1% of the rated output torque); the gear unit input end is blocked.

The reduced backlash variant is available for the following gear units:

- Helical gear units (R) sizes 37 to 167
- Parallel-shaft gear units (F) sizes 37 to 157
- Helical-bevel gear units (K) sizes 37 to 187

Multi-stage gear units are not available in reduced backlash variants.

Apart from the parallel-shaft gear units FH.87 and FH.97 with reduced backlash, the dimensions of the reduced backlash variants correspond to the dimensions of the standard designs.

The following figure shows the dimensions of the FH.87 and FH.97 gear units with reduced backlash:

42 020 00 09

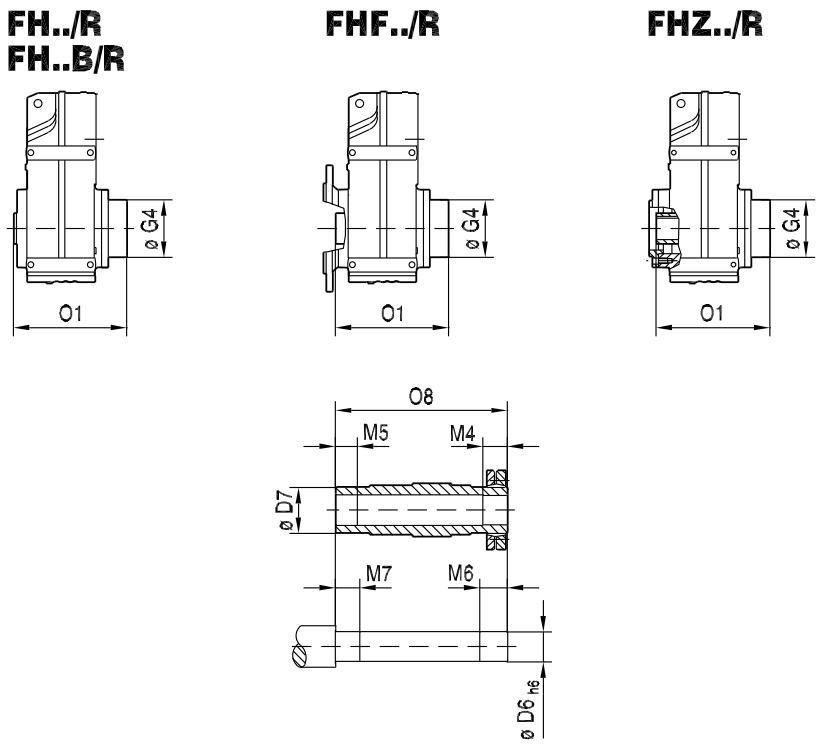

Type	D6	D7	G4	M4	M5	M6	M7	O1	O8
FH.87/R	Ø 65 $_{h6}$	Ø 85	Ø 163	41	40	46	45	312.5	299.5
FH.97/R	Ø 75 $_{h6}$	Ø 95	Ø 184	55	50	60	55	382.5	367

6.2 Assembly/disassembly of gear units with hollow shaft and key

	INFORMATION
	• Always use the supplied NOCO® fluid for assembly. The fluid prevents contact corrosion and facilitates subsequent disassembly. • The key dimension X is specified by the customers, but X > DK must apply, see below figure.

Assembly

SEW-EURODRIVE recommends two variants for mounting gear units with hollow shaft and key onto the input shaft of the driven machine (= customer shaft):

1. Use the provided fastening parts for installation.
2. Use the optional installation / removal kit for installation.

1) Supplied fastening parts

The following fastening parts are supplied as standard:

- Retaining screw with washer (2)
- Retaining ring (3)

Note the following points concerning the customer shaft:

- The installation length of the customer shaft with contact shoulder (A) must be L8 - 1 mm.
- The installation length of the customer shaft without contact shoulder (B) must equal L8.

00 001 00 02

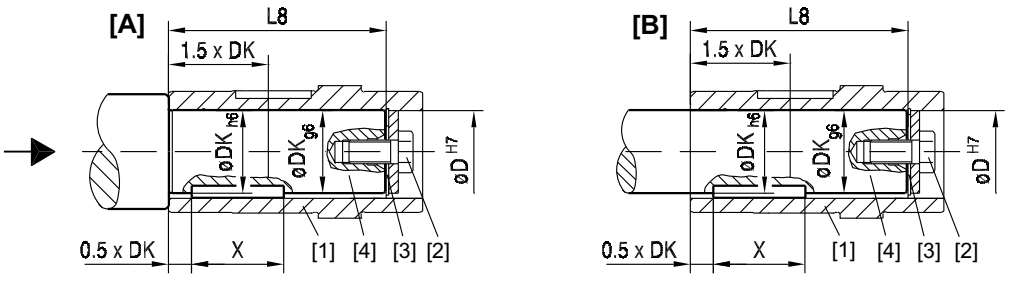

[1] Hollow shaft
[2] Retaining screw with washer
[3] Retaining ring
[4] Customer shaft

Dimensions and tightening torque:

The retaining screw (2) must be tightened to the tightening torque MS given in the following table.

Gear unit type	D^{H7} mm	DK mm	L8 mm	MS Nm
WA..10	16	16	69	8
WA..20	18	18	8484	
WA..20	20	20		
FA..27	25	25	88	20
WA..30, WA..37	20	20	105	8
SA..37, BSAF202			104	
FA..37, KA..37, SA..47	30	30	105	20
BSAF302	25	25	118	
SA..47, WA..37			105	
SAF402	30	30	138	
FA..47, KA..47, SA..57	35	35	132	
WA..47	30	30	122	
SA..57			132	
FA..57, KA..57	40	40	142	40
BSAF502			158	
FA..67, KA..67			156	
SA..67			144	
SA..67	45	45	144	
BSAF602	55	55	179	80
FA..77, KA..77, SA..77	50	50	183	40
SA..77	60	60	180	80
FA..87, KA..87			210	
SA..87			220	
SA..87	70	70	220	
BSAF802	60	60	222	
FA..97, KA..97	70	70	270	
SA..97			260	
SA..97	90	90	255	200
FA..107			313	
KA..107			313	
FA..127, KA..127	100	100	373	
FA..157, KA..157	120	120	460	

2. Installation/ removal kit

You can also use the optional installation/removal kit for installation. You can order the kit for the specific gear unit type(s) by quoting the part numbers in the next table. The delivery includes:

- Spacer tube for installation without contact shoulder (5)
- Retaining screw for installation (2)
- Forcing washer for removal (7)
- Locked nut for removal (8)

The short retaining screw delivered as standard is not required.

Note the following points concerning the customer shaft:

- The installation length of the customer shaft must be LK2. Do not use the spacer if the customer shaft **has a contact shoulder (A)**.
- The installation length of the customer shaft must be LK2. Use the spacer if the customer shaft **has a contact shoulder (B)**.

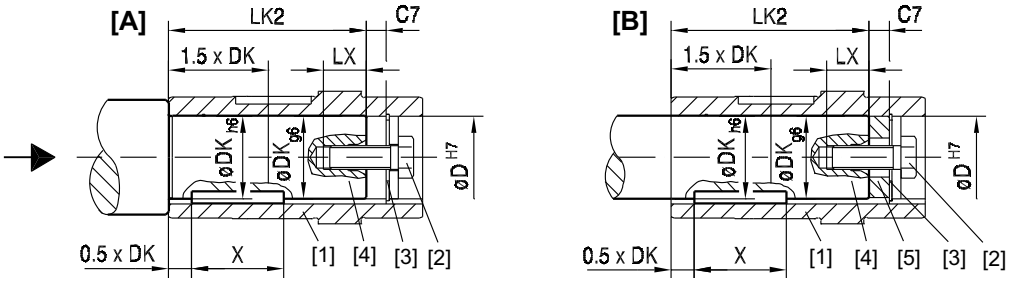

[1] Hollow shaft
[2] Retaining screw with washer
[3] Retaining ring
[4] Customer shaft
[5] Spacer tube

Dimensions, tightening torque and part numbers:

The retaining screw (2) must be tightened to the tightening torque MS given in the following table.

Type	D^{H7} mm	DK mm	LK2 mm	LX^{+2} mm	C7 mm	MS Nm	Part number of installation/removal set
WA..10	16	16	57	12.5	11	8	643 712 5
WA..20	18	18	72	16	12		643 682 X
WA..20, WA..30, WA..37	20	20	72, 93				643 683 8
SA..37	20	20	92	16	12	8	643 683 8
FA..27	25	25	72	22	16	20	643 684 6
SA..47			89				
WA..47	30	30	106				643 685 4
FA..37, KA..37			89				
SA..47			89				
SA..57			116				
FA..47, KA..47, SA..57	35	35	114	28	18		643 686 2
FA..57, KA..57	40	40	124	36		40	643 687 0
FA..67			138				
KA..67			138				
SA..67			126				
SA..67	45	45	126				643 688 9
FA..77, KA..77, SA..77	50	50	165				643 689 7
FA..87, KA..87	60	60	188	42	22	80	643 690 0
SA..77			158				
SA..87			198				
FA..97, KA..97	70	70	248				643 691 9
SA..87			198				
SA..97			238				
FA..107, KA..107	90	90	287	50	26	200	643 692 7
SA..97			229				
FA..127, KA..127	100	100	347				643 693 5
FA..157, KA..157	120	120	434				643 694 3

Disassembly

Applies only if installation/removal kit was previously used for installation (see Figure).

Proceed as follows to remove the gear unit:

1. Loosen the retaining screw (6).
2. Remove the circlip (3) and, if used, the spacer tube (5).
3. Place the forcing washer (7) and the locked nut (8) between the customer shaft (4) and circlip (3) as shown in the figure.
4. Re-install the circlip (3).
5. Re-install the retaining screw (6). Now you can force the gear unit off the shaft.

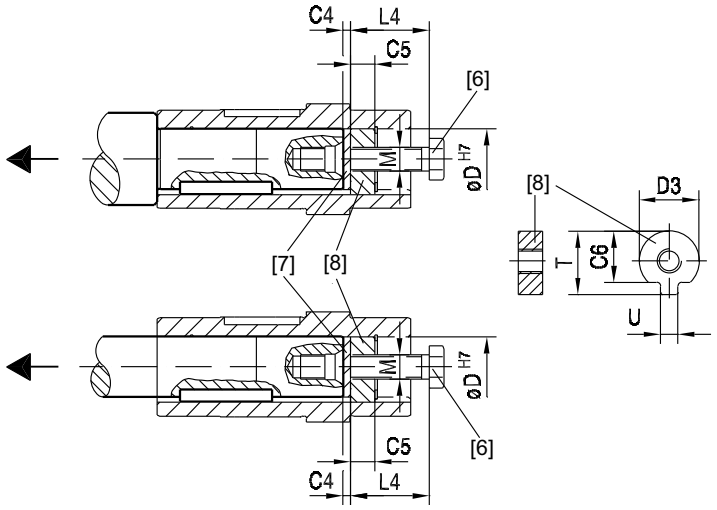

[6] Retaining screw
[7] Forcing washer
[8] Locked nut for removal

Dimensions and part numbers:

Type	D^{H7} mm	M	C4 mm	C5 mm	C6 mm	$U^{-0.5}$ mm	$T^{-0.5}$ mm	$D3^{-0.5}$ mm	L4 mm	Part number of installation/removal kit
WA..10	16	M5	5	5	12	4.5	18	15.7	50	643 712 5
WA..20	18	M6		6	13.5	5.5	20.5	17.7	25	643 682 X
WA..20, WA..30, WA..37, SA..37	20				15.5	5.5	22.5	19.7		643 683 8
FA27.., SA..47	25	M10		10	20	7.5	28	24.7	35	643 684 6
FA..37, KA..37, SA..47, SA..57, WA..47	30				25	7.5	33	29.7		643 685 4
FA..47, KA..47, SA..57	35	M12		12	29	9.5	38	34.7	45	643 686 2
FA..57, KA..57, FA..67, KA..67, SA..67	40	M16			34	11.5	41.9	39.7	50	643 687 0
SA..67	45				38.5	13.5	48.5	44.7		643 688 9
FA..77, KA..77, SA..77	50				43.5	13.5	53.5	49.7		643 689 7
FA..87, KA..87, SA..77, SA..87	60	M20		16	56	17.5	64	59.7	60	643 690 0
FA..97, KA..97, SA..87, SA..97	70				65.5	19.5	74.5	69.7		643 691 9
FA..107, KA..107, SA..97	90	M24		20	80	24.5	95	89.7	70	643 692 7
FA..127, KA..127	100				89	27.5	106	99.7		643 693 5
FA..157, KA..157	120				107	31	127	119.7		643 694 3

6.3 Gear units with hollow shaft

Chamfers on hollow shafts

The following illustration shows the chamfers on parallel shaft helical, helical-bevel, helical-worm and SPIROPLAN® gear units with hollow shaft:

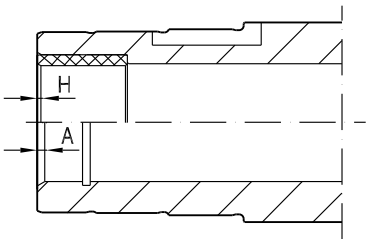

59845AXX

Gear unit	Type	
	with hollow shaft (A)	with hollow shaft and shrink disk (H)
W..10 - W..30	2 × 30°	-
F..27	2 × 30°	0.5 × 45°
BS.F202	2 × 30°	0.5 × 45°
F../K../S../W..37	2 × 30°	0.5 × 45°
BS.F302	2 × 30°	0.5 × 45°
F../K../S../ W..47	2 × 30°	0.5 × 45°
BS.F402	2 × 30°	0.5 × 45°
S..57	2 × 30°	0.5 × 45°
F../K..57	2 × 30°	3 × 2°
BS.F502	2 × 30°	3 × 2°
F../K../S..67	2 × 30°	3 × 2°
BS.F602	2 × 30°	3 × 2°
F../K../S..77	2 × 30°	3 × 2°
F../K../S..87	3 × 30°	3 × 2°
BS.F802	2 × 30°	3 × 2°
F../K../S..97	3 × 30°	3 × 2°
F../K..107	3 × 30°	3 × 2°
F../K..127	5 × 30°	1.5 × 30°
F../K..157	5 × 30°	1.5 × 30°
KH167	-	1.5 × 30°
KH187	-	1.5 × 30°

Special motor/gear unit combinations

Please note for parallel shaft helical gearmotors with hollow shaft (FA..B, FV..B, FH..B, FAF, FVF, FHF, FA, FV, FH, FT, FAZ, FVZ, FHZ):

- If you are using a customer shaft pushed through on the motor end, there may be a collision when a "small gear unit" is used in combination with a "large motor".
- Check the motor dimension AC to decide whether there will be a collision with a pushed-through customer shaft.

6.4 TorqLOC® hollow shaft mounting system for gear units with hollow shaft

Description of TorqLOC®

The TorqLOC® hollow shaft mounting system is used for achieving a non-positive connection between customer shaft and the hollow shaft in the gear unit. As a result, the TorqLOC® hollow shaft mounting system is an alternative to the hollow shaft with shrink disk, the hollow shaft with key and the splined hollow shaft.

The TorqLOC® hollow shaft mounting system consists of the following components:

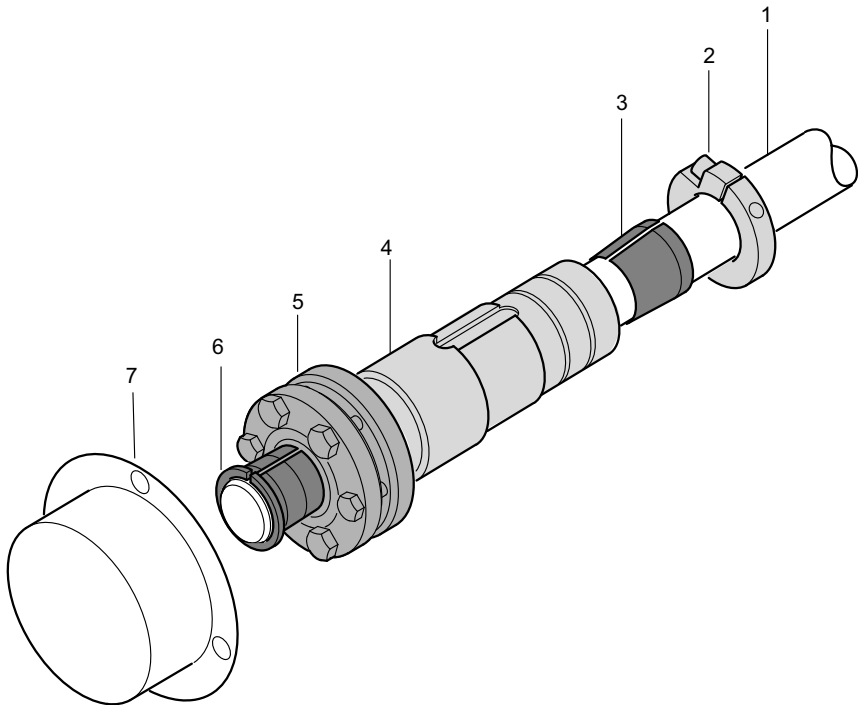

51939AXX

[1]	Customer shaft	[5]	Shrink disk
[2]	Clamping ring	[6]	Conical steel bushing
[3]	Conical bronze bushing	[7]	Fixed cover
[4]	Hollow shaft in gear unit		

Advantages of TorqLOC®

The TorqLOC® hollow shaft mounting system provides the following advantages:

- Cost saving as the customer shaft can be made from drawn material up to quality h11.
- Cost saving as different customer shaft diameters can be realized with one hollow shaft diameter and different bushings.
- Simple installation as there is no need to accommodate any shaft connections.
- Simple removal even after many hours of operation as the formation of contact corrosion has been reduced and the conical connections can easily be released.

Technical data

The TorqLOC® hollow shaft mounting system is approved for input torques of 92 Nm to 18 000 Nm.

The following gear units are available with TorqLOC® hollow shaft mounting system:

- Parallel shaft helical gear units in gear unit sizes 37 to 157 (FT37 ... FT157)
- Helical-bevel gear units in gear unit sizes 37 to 157 (KT37 ... KT157)
- Helical-worm gear units in gear unit sizes 37 to 97 (ST37 ... ST97)
- SPIROPLAN® gear unit sizes 37 and 47 (WT.7)

Available options

The following options are available for gear units with a TorqLOC® hollow shaft mounting system:

- Helical-bevel, helical-worm and SPIROPLAN® gear units with TorqLOC® (KT.., ST.., WT37): The "torque arm" (../T) option is available.
- Parallel shaft helical gear units with TorqLOC® (FT..): The "rubber buffer" (../G) option is available.

6.5 Gear units with flange block shaft

	INFORMATION
	Only use screws in **strength class 12.9** to fasten the output elements onto the flange block shaft of the gear unit.

6.6 Shouldered hollow shaft with shrink disk option

As an option, gear units with hollow shaft and shrink disk (parallel-shaft helical gear units FH/FHF/FHZ37-157, helical-bevel gear units KH/KHF/KHZ37-157 and helical-worm gear units SH/SHF47-97) can be supplied with a larger bore diameter D'.

D' = D as standard.

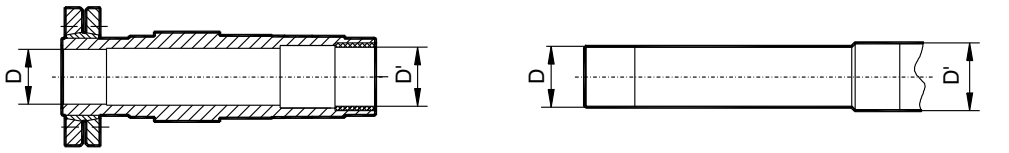

03389AXX

Gear unit	Bore diameter D / optionally D' mm
FH / FHF / FHZ37, KH / KHF / KHZ37, SH / SHF / SHZ47	30 / 32
FH / FHF / FHZ47, KH / KHF / KHZ47, SH / SHF / SHZ57	35 / 36
FH / FHF / FHZ57, KH / KHF / KHZ57	40 / 42
FH / FHF / FHZ67, KH / KHF / KHZ67, SH / SHF / SHZ67	40 / 42
FH / FHF / FHZ77, KH / KHF / KHZ77, SH / SHF / SHZ77	50 / 52
FH / FHF / FHZ87, KH / KHF / KHZ87, SH / SHF / SHZ87	65 / 66
FH / FHF / FHZ97, KH / KHF / KHZ97, SH / SHF / SHZ97	75 / 76
FH / FHF / FHZ107, KH / KHF / KHZ107	95 / 96
FH / FHF / FHZ127, KH / KHF / KHZ127	105 / 106
FH / FHF / FHZ157, KH / KHF / KHZ157	125 / 126

Diameter D/D' must be specified when ordering gear units with a shouldered hollow shaft (optional bore diameter D').

Sample order FH37 DRS80M4 with hollow shaft 30/32 mm

Parallel shaft helical gear units with shouldered hollow shaft (dimensions in mm):

FH / FHF / FHZ37

ø 30 H7/ ø 32 H7

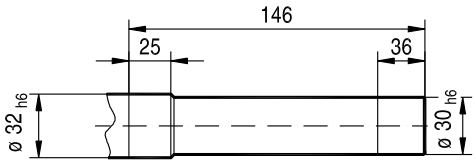

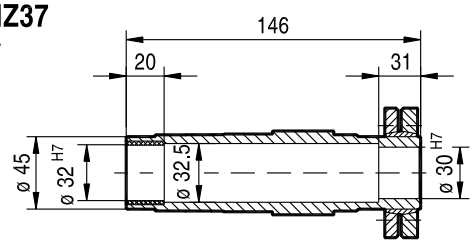

FH / FHF / FHZ47

ø 35 H7/ ø 36 H7

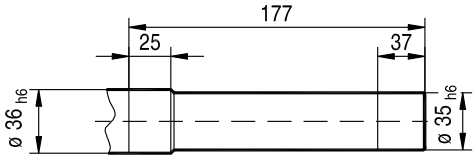

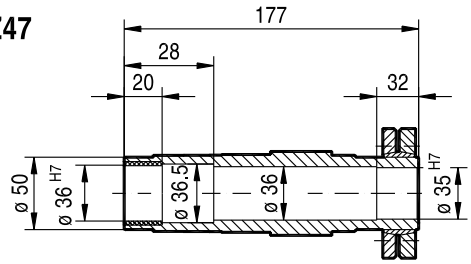

FH / FHF / FHZ57

ø 40 H7/ ø 42 H7

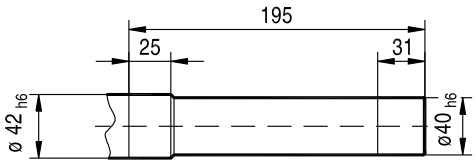

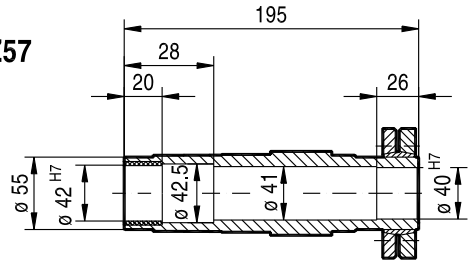

FH / FHF / FHZ67

ø 40 H7/ ø 42 H7

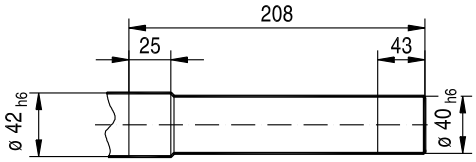

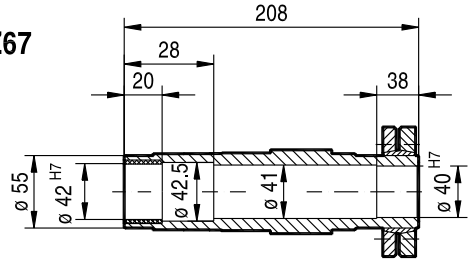

FH / FHF / FHZ77

ø 50 H7/ ø 52 H7

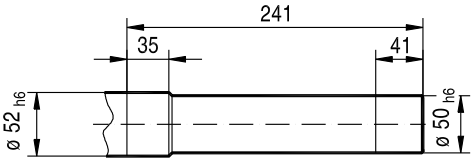

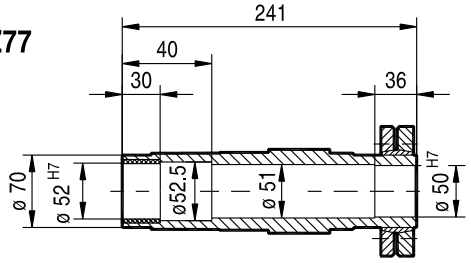

04341AXX

FH / FHF / FHZ87

ø 65 H7/ ø 66 H7

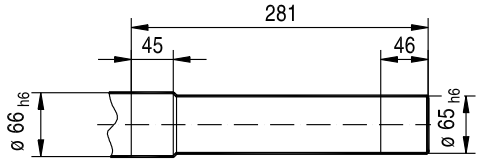

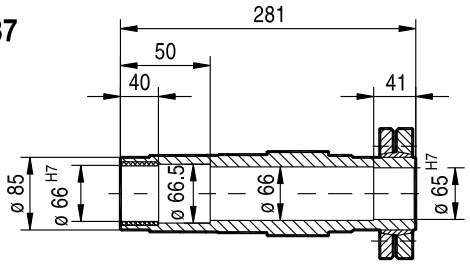

FH / FHF / FHZ97

ø 75 H7/ ø 76 H7

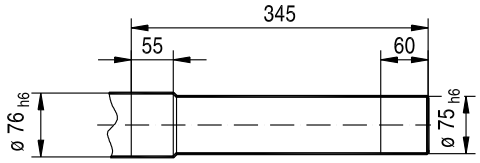

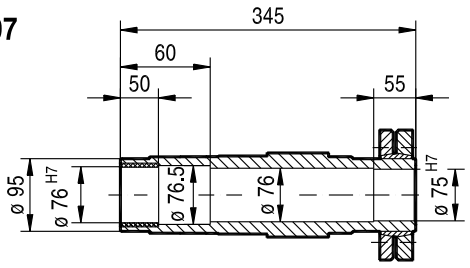

FH / FHF / FHZ107

ø 95 H7/ ø 96 H7

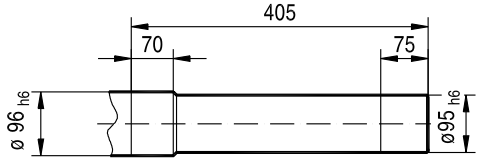

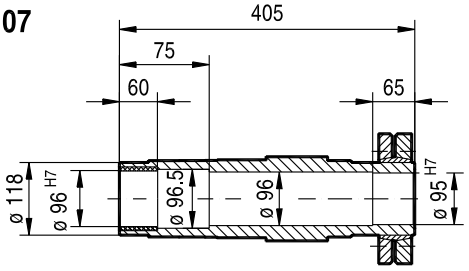

FH / FHF / FHZ127

ø 105 H7/ ø 106 H7

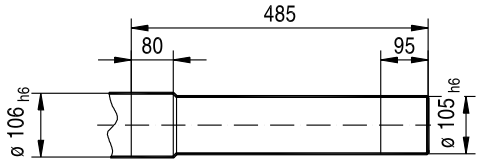

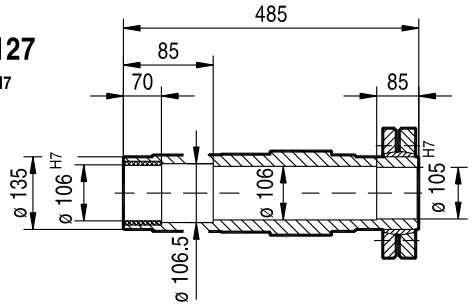

FH / FHF / FHZ157

ø 125 H7/ ø 126 H7

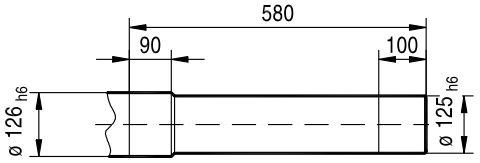

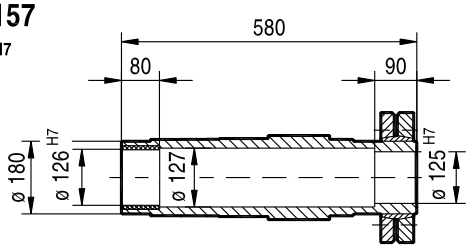

04342AXX

Helical-bevel gear units with shouldered hollow shaft (dimensions in mm):

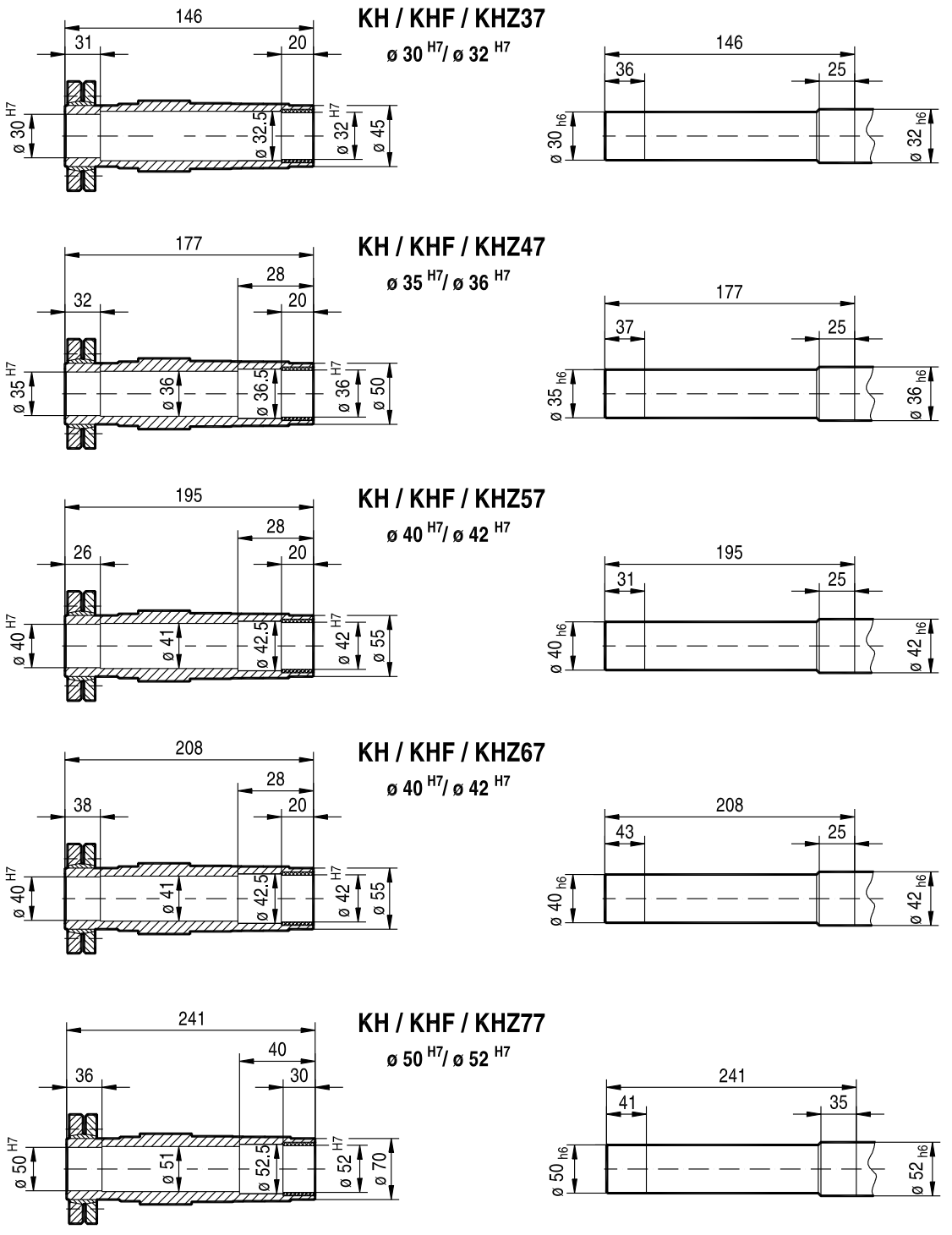

04343AXX

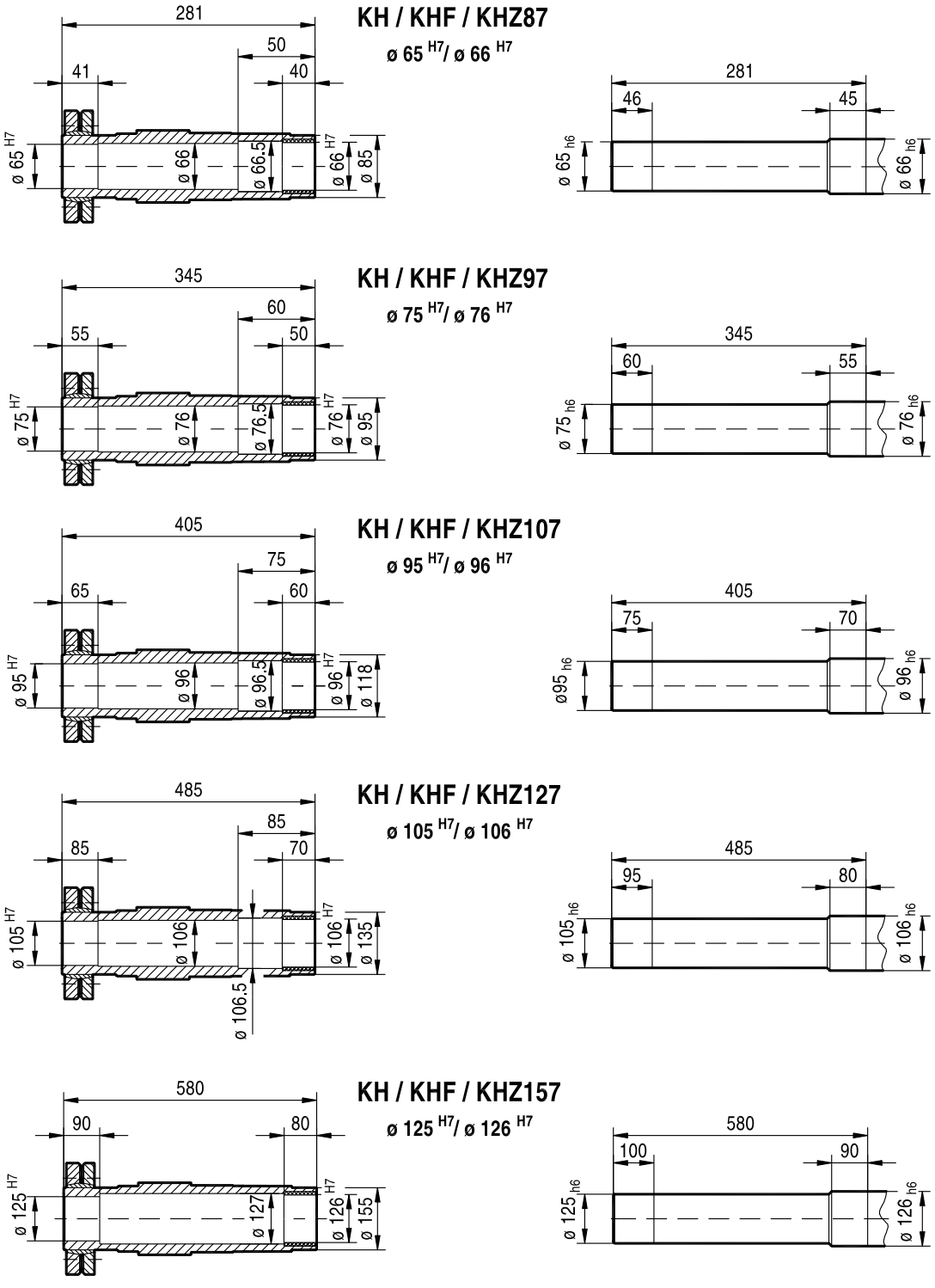
KH / KHF / KHZ87
ø 65 H7/ ø 66 H7
281
50
41
40
ø 65 H7
ø 66
ø 66.5
ø 66 H7
ø 85
281
46
45
ø 65 h6
ø 66 h6
KH / KHF / KHZ97
ø 75 H7/ ø 76 H7
345
60
55
50
ø 75 H7
ø 76
ø 76.5
ø 76 H7
ø 95
345
60
55
ø 75 h6
ø 76 h6
KH / KHF / KHZ107
ø 95 H7/ ø 96 H7
405
75
65
60
ø 95 H7
ø 96
ø 96.5
ø 96 H7
ø 118
405
75
70
ø95 h6
ø 96 h6
KH / KHF / KHZ127
ø 105 H7/ ø 106 H7
485
85
85
70
ø 105 H7
ø 106
ø 106 H7
ø 135
ø 106.5
485
95
80
ø 105 h6
ø 106 h6
KH / KHF / KHZ157
ø 125 H7/ ø 126 H7
580
90
80
ø 125 H7
ø 127
ø 126 H7
ø 155
580
100
90
ø 125 h6
ø 126 h6

04344AXX

Helical-worm gear units with shouldered hollow shaft (dimensions in mm):

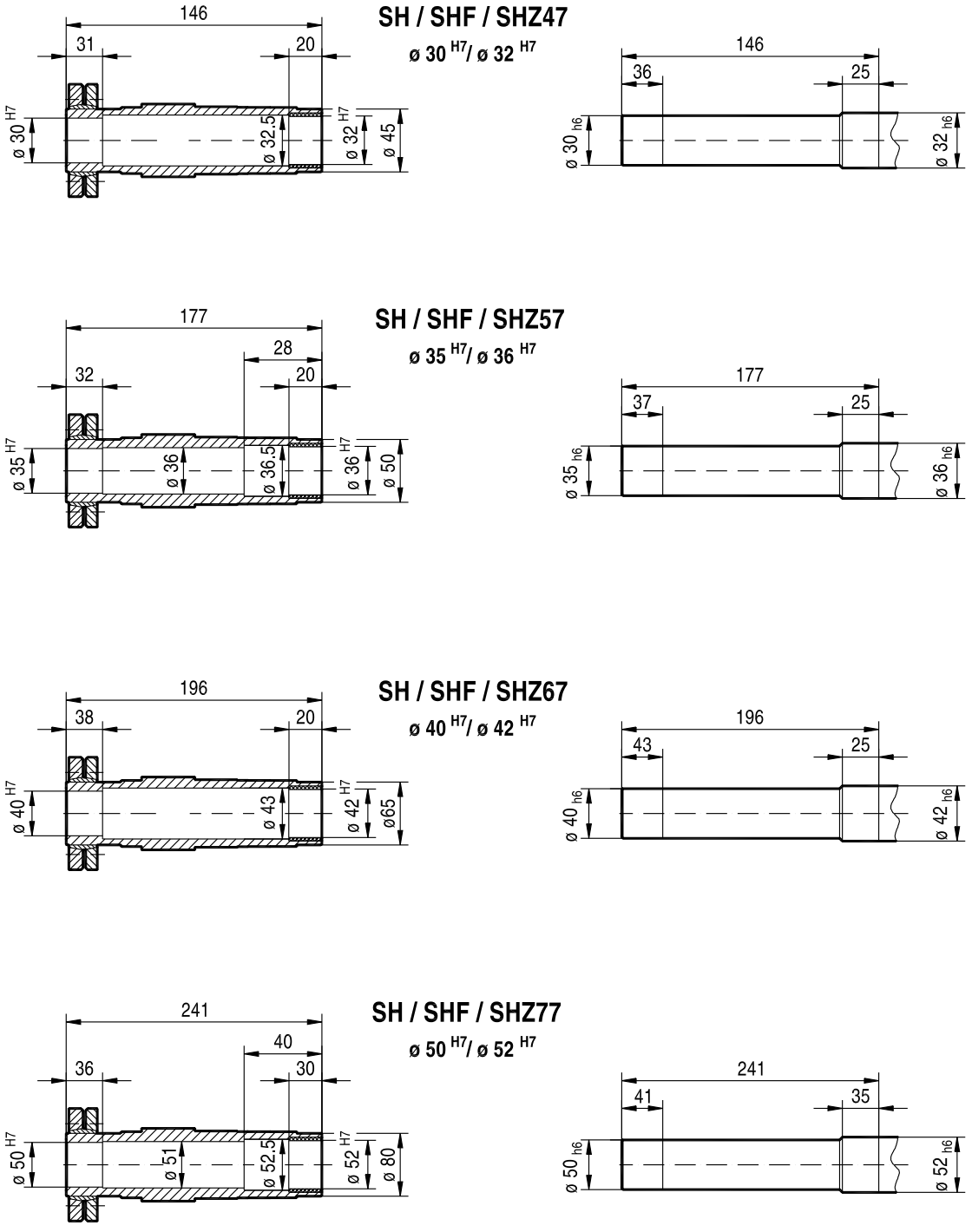

04345AXX

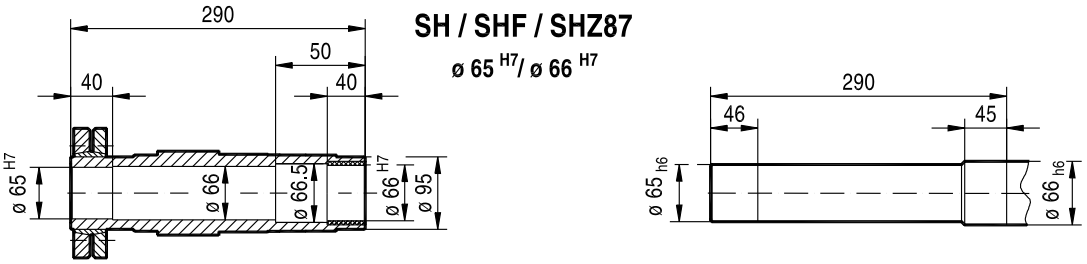

SH / SHF / SHZ87

ø 65 H7/ ø 66 H7

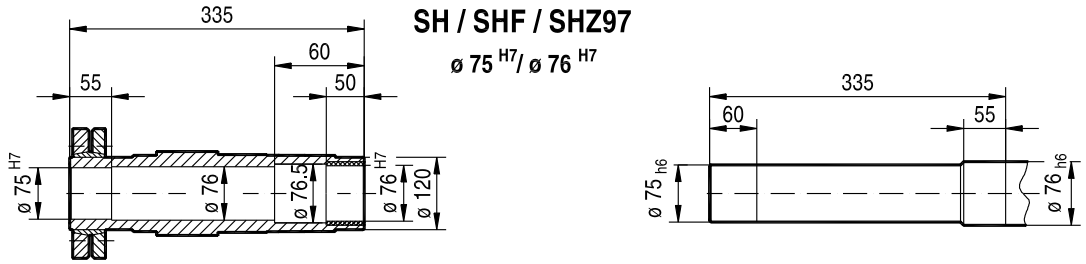

SH / SHF / SHZ97

ø 75 H7/ ø 76 H7

04346AXX

6.7 Fastening the gear unit

Use bolts of quality 8.8 to fasten gear units and gearmotors.

Exception

Use bolts of **quality 10.9** to fasten the customer flange to transmit the rated torques for the following flange-mounted (RF ../RZ..) and foot/flange-mounted gearmotors (R..F, BS.F..B):

- RF37, R37F with flange ∅ 120 mm
- RF47, R47F with flange ∅ 140 mm
- RF57, R57F with flange ∅ 160 mm
- RZ37 - RZ87
- BS.F502B - BS.F802B

6.8 Torque arms

Available torque arms

Gear unit	Size					
	27	37	47	57	67	77
KA, KH, KV, KT	-	643 425 8	643 428 2	643 431 2	643 431 2	643 434 7
SA, SH, ST	-	126 994 1	644 237 4	644 240 4	644 243 9	644 246 3
FA, FH, FV, FT Rubber buffer (2 pieces)	013 348 5	013 348 5	013 348 5	013 348 5	013 348 5	013 349 3

Gear unit	Size				
	87	97	107	127	157
KA, KH, KV, KT	643 437 1	643 440 1	643 443 6	643 294 8	-
SA, SH, ST	644 249 8	644 252 8	-	-	-
FA, FH, FV, FT Rubber buffer (2 pieces)	013 349 3	013 350 7	013 350 7	013 351 5	013 347 7

Gear unit	Size				
	10	20	30	37	47
WA	1 061 021 9	1 68 073 0	1 68 011 0	1 061 129 0	1 061 187 8

Gear unit	Size					
	202	302	402	502	602	802
BSHF, BSAF	1 063 098 8	1 063 100 3	1 063 103 8	1 063 105 4	1 063 107 0	1 063 109 7

Torque arms for KH167.., KH187..

As standard, torque arms are not available for gear unit sizes KH167.. and KH187... Consult SEW-EURODRIVE for design proposals if you require torque arms for these gear units.

6.9 Flange contours of RF.. and R..F gear units

04355AXX

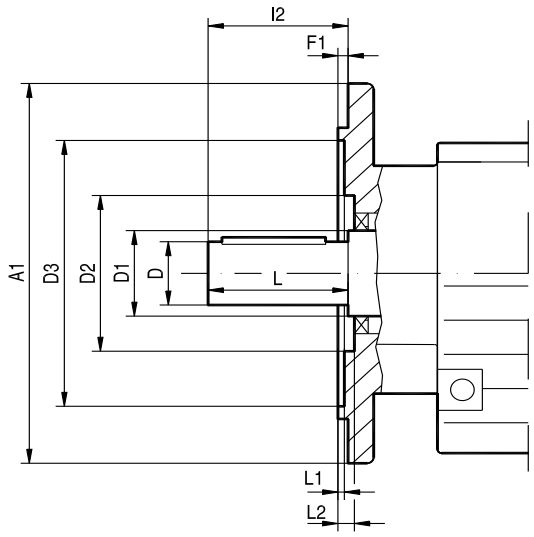

Check dimensions L1 and L2 for selection and installation of output elements.

Type	Dimensions in mm											
	A1	D	D1	D2		D3	F1	I2	L	L1		L2
				RF	R..F					RF	R..F	
RF07, R07F	120	20	22	38	38	72	3	40	40	2	2	6
	140[1)]				-	85	3			2	-	6
	160[1)]				-	100	3.5			2.5	-	6.5
RF17, R17F	120	20	25	46	46	65	3	40	40	1	1	5
	140				-	78	3			1	-	5
	160[1)]				-	95	3.5			1	-	6
RF27, R27F	120	25	30	54	54	66	3	50	50	1	1	6
	140				-	79	3			3	-	7
	160				-	92	3.5			3	-	7
RF37, R37F	120	25	35	60	63	70	3	50	50	5	4	7
	160				-	96	3.5			1	-	7.5
	200[1)]				-	119	3.5			1	-	7.5
RF47, R47F	140	30	35	72	64	82	3	60	60	4	1	6
	160				-	96	3.5			0.5	-	6.5
	200				-	116	3.5			0.5	-	6.5
RF57, R57F	160	35	40	76	75	96	3.5	70	70	4	2.5	5
	200				-	116	3.5			0	-	5
	250[1)]				-	160	4			0.5	-	5.5
RF67, R67F	200	35	50	90	90	118	3.5	70	70	2	4	7
	250				-	160	4			1	-	7.5
RF77, R77F	250	40	52	112	100	160	4	80	80	0.5	2.5	7
	300[1)]				-	210	4			0.5	-	7
RF87, R87F	300	50	62	123	122	210	4	100	100	0	1.5	8
	350				-	226	5			1	-	9
RF97	350	60	72	136		236	5	120	120	0		9
	450					320						
RF107	350	70	82	157		232	5	140	140	0		11
	450			186		316						
RF137	450	90	108	180		316	5	170	170	0		10
	550					416						
RF147	450	110	125	210		316	5	210	210	0		10
	550					416						
RF167	550	120	145	290		416	5	210	210	1		10
	660					517	6			2		11

1) The flange contour protrudes from under the base surface.

6.10 Flange contours of FF.., KF.., SF.., and WF.. gear units

64353AXX

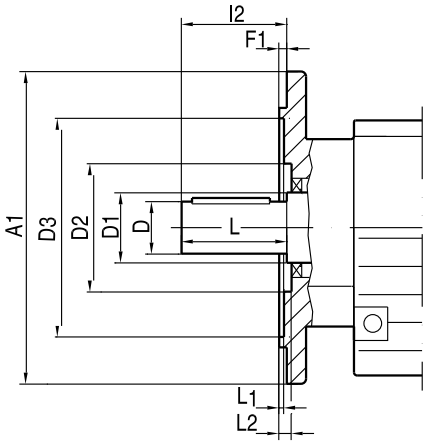

Check dimensions L1 and L2 for selection and installation of output elements.

Type	Dimensions in mm									
	A1	D	D1	D2	D3	F1	I2	L	L1	L2
FF27	160	25	40	66	96	3.5	50	50	3	18.5
FF37	160	25	30	70	94	3.5	50	50	2	6
FF47	200	30	40	72	115	3.5	60	60	3.5	7.5
FF57	250	35	40	84	155	4	70	70	4	9
FF67	250	40	50	84	155	4	80	80	4	9
FF77	300	50	55	82	205	4	100	100	5	9
FF87	350	60	65	115	220	5	120	120	5	9
FF97	450	70	75	112	320	5	140	140	8	10
FF107	450	90	100	159	318	5	170	170	16	9
FF127	550	110	118	-	420	5	210	210	10	-
FF157	660	120	135	190	520	6	210	210	8	14
KF37	160	25	30	70	94	3.5	50	50	2	6
KF47	200	30	40	72	115	3.5	60	60	3.5	7.5
KF57	250	35	40	84	155	4	70	70	4	9
KF67	250	40	50	84	155	4	80	80	4	9
KF77	300	50	55	82	205	4	100	100	5	9
KF87	350	60	65	115	220	5	120	120	5	9
KF97	450	70	75	112	320	5	140	140	8	10
KF107	450	90	100	159	318	5	170	170	16	9
KF127	550	110	118	-	420	5	210	210	10	-
KF157	660	120	135	190	520	6	210	210	8	14
SF37	120	20	25	-	68	3	40	40	6	-
SF37	160	20	25	-	96	3.5	40	40	5.5	-
SF47	160	25	30	70	94	3.5	50	50	2	6
SF57	200	30	40	72	115	3.5	60	60	3.5	7.5
SF67	200	35	45	-	115	3.5	70	70	8.5	-
SF77	250	45	55	108	160	4	90	90	8	9
SF87	350	60	65	130	220	5	120	120	6	10
SF97	450	70	75	150	320	5	140	140	8.5	10
WF10	80	16	25	-	39	2.5	40	40	30	-
WF10	120	16	25	39	74	3	40	40	5	30
WF20	110	20	30	44	53	-4	40	40	27	35
WF20	120	20	30	-	45	2.5	40	40	37.5	-
WF30	120	20	30	48	63	2.5	40	40	18	27
WF30	160	20	30	48	63	2.5	40	40	33	42
WF37	120	20	30	-	70	2.5	40	40	-	10.5
WF37	160	20	30	-	70	2.5	40	40	-	25.5
WF47	160	30	35	-	92	3.5	10	60	6	-

6.11 Flange contours of FAF.., KAF.., SAF.., and WAF.. gear units

59719AXX

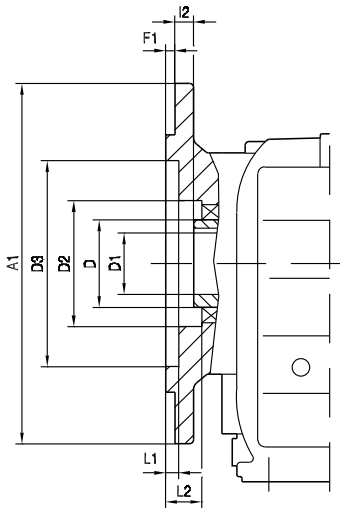

Check dimensions L1 and L2 for selection and installation of output elements.

Type	Dimensions in mm								
	A1	D	D1	D2	D3	F1	I2	L1	L2
FAF27	160	40	25	66	96	3.5	20	3	18.5
FAF37	160	45	30	62	94	3.5	24	2	30
FAF47	200	50	35	70	115	3.5	25	3.5	31.5
FAF57	250	55	40	76	155	4	23.5	4	31
FAF67	250	55	40	76	155	4	23	4	31
FAF77	300	70	50	95	205	4	37	5	45
FAF87	350	85	60	120	220	5	30	5	39
FAF97	450	95	70	135	320	5	41.5	5.5	51
FAF107	450	118	90	224	320	5	41	16	52
FAF127	550	135	100	185	420	5	51	6	63
FAF157	660	155	120	200	520	6	60	10	74
KAF37	160	45	30	62	94	3.5	24	2	30
KAF47	200	50	35	70	115	3.5	25	3.5	8.5
KAF57	250	55	40	76	155	4	23.5	4	31
KAF67	250	55	40	76	155	4	23	4	31
KAF77	300	70	50	95	205	4	37	5	45
KAF87	350	85	60	120	220	5	30	5	39
KAF97	450	95	70	135	320	5	41.5	5.5	51
KAF107	450	118	90	224	320	5	41	16	52
KAF127	550	135	100	185	420	5	51	6	63
KAF157	660	155	120	200	520	6	60	10	74
SAF37	120	35	20	-	68	3	15	6	-
SAF37	160	35	20	-	96	3.5	15	5.5	-
SAF47	160	45	30 / 25	62	94	3.5	24	2	30
SAF57	200	50	35 / 30	70	115	3.5	25	3.5	31.5
SAF67	200	65	45 / 40	91	115	3.5	42.5	4	48.5
SAF77	250	80	60 / 50	112	164	4	45.5	5	53.5
SAF87	350	95	70 / 60	131	220	5	52.5	6	62.5
SAF97	450	120	90 / 70	160	320	5	60	6.5	69
WAF10	80	25	16	-	39	2.5	23	30	-
WAF10	120	25	16	39	74	3	23	5	30
WAF20	110	30	18 / 20	44	53	-4	30	27	35
WAF20	120	30	18 / 20	-	45	2.5	30	37.5	-
WAF30	120	30	20	48	63	2.5	19.5	18	27
WAF30	160	30	20	48	63	2.5	34.5	33	42
WAF37	120	35	20 / 25	54	70	2.5	19.5	10.5	27
WAF37	160	35	20 / 25	54	70	2.5	34.5	25.5	42
WAF47	160	45	25 / 30	72	92	3.5	10	6	45

6.12 Fixed covers

Parallel shaft helical gear units, helical-bevel gear units, helical-worm and SPIROPLAN® gear units with hollow shafts and shrink disks of size 37 up to size 97 come equipped with a rotating cover as standard. If, for safety reasons, fixed covers are required for these gear units, you can order them for the respective gear unit types by quoting the part numbers in the following tables. As standard, size 107 parallel-shaft helical gear units and helical-bevel gear units with hollow shafts and shrink disks and size 27 parallel-shaft helical gear units come equipped with a fixed cover.

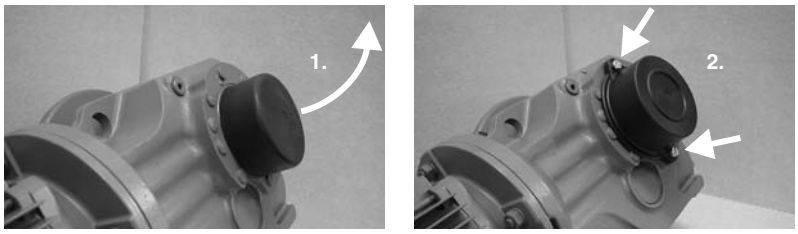

03190AXX

[1] Pull off the rotating cover

[2] Install and fasten fixed cover

Part numbers and dimensions

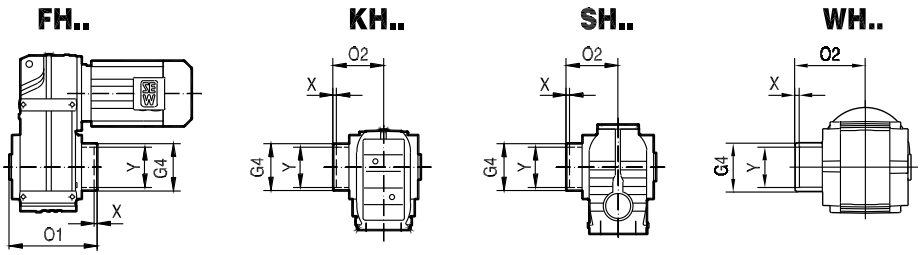

62664AXX

Parallel-shaft helical gearmotors	FH..37	FH..47	FH..57	FH..67	FH..77	FH..87	FH..97
Part number	643 513 0	643 514 9	643 515 7	643 515 7	643 516 5	643 517 3	643 518 1
Max. size of CMP motor that can be mounted	CMP71M	CMP80S	CMP100S	CMP100L	CMP100L	CMP100L	CMP100L
G4	78	88	100	100	121	164	185
O1	157	188.5	207.5	221.5	255	295	363.5
X	2	4.5	7.5	6	6	4	6.5
Y	75	83	83	93	114	159	174

Helical-bevel gearmotors[1)]	KH..37	KH..47	KH..57	KH..67	KH..77	KH..87	KH..97
Part number	643 513 0	643 514 9	643 515 7	643 515 7	643 516 5	643 517 3	643 518 1
G4 [mm]	78	88	100	100	121	164	185
O2 [mm]	95	111.5	122.5	129	147	172	210.5
X [mm]	0	1.5	5.5	3	1	2	4.5
Y [mm]	75	83	83	93	114	159	174

1) Not possible in foot-mounted helical-bevel gear units with hollow shaft and shrink disk (KH..B).

Helical-worm gearmotors	SH..37	SH..47	SH..57	SH..67	SH..77	SH..87	SH..97
Part number	643 512 2	643 513 0	643 514 9	643 515 7	643 516 5	643 517 3	643 518 1
G4 [mm]	59	78	88	100	121	164	185
O2 [mm]	88	95	111.5	123	147	176	204.5
X [mm]	1	0	1.5	3	1	0	0.5
Y [mm]	53	75	83	93	114	159	174

SPIROPLAN® gearmotors	WH..37	WH..47
Part number	1 061 136 3	1 061 194 0
G4 [mm]	68	80.5
O2 [mm]	95.5	109.5
X [mm]	11	12.5
Y [mm]	50	72

6.13 Oil aging and vibration sensor for R, F, K, S, W gear units

Technical data for oil aging sensor

DUO10A diagnostic unit

/DUO10A	Technical data		
Preset oil grades	OIL1	CLP mineral oil.	T_{max} = 100 °C
		Bio oil	T_{max} = 100 °C
	OIL2	CLP HC synthetic oil:	T_{max} = 130 °C
		CLP PAO oil	T_{max} = 130 °C
	OIL3	CLP PG polyglycol	T_{max} = 130 °C
	OIL4	Food grade oil	T_{max} = 100 °C
Switch outputs	1: Early warning (time to next oil change can be set to between 2 and 100 days) 2: Main alarm (time to oil change 0 days) 3: Exceeded temperature T_{max} 4: DUO10A is ready for operation		
Permitted oil temperature	-40 °C to +130 °C		
Permitted temperature sensors	PT1000		
EMC	IEC1000-4-2/3/4/6		
Ambient temperature	-25 °C to +70 °C		
Operating voltage	DC 18-28 V		
Current consumption at DC 24 V	<90 mA		
Protection class	III		
Degree of protection	IP67 (optionally IP69K)		
Housing materials	Evaluation unit: V2A, EPDM/X, PBT, FPM Temperature sensor: V4A		
Electrical connection	Evaluation unit: M12 plug connector PT1000 temperature sensor: M12 plug connector		

Designations and part numbers

Designation	Description	Part number
DUO10A 	Evaluation unit (basic unit)	1 343 875 1
DUO10A-PUR-M12-5m	5 m PUR cable with 1 connector	1 343 877 8
DUO10A-PVC-M12-5m	5 m PVC cable with 1 connector	1 343 878 6
DUO10A	Angle bracket	1 343 880 8
DUO10A D = 34	Mounting clamp	1 343 879 4

Designation	Description	Part number
W4843 PT1000 	PT1000 temperature sensor	1 343 881 6
W4843_4x0.34-2m-PUR	2 m PUR cable for PT1000[1)]	1 343 882 4
W4843_4x0.34-2m-PVC	2 m PVC cable for PT1000[2)]	1 343 883 2
DUO10A 	Protection cap (for aseptic design, IP69K)	1 343 902 2

1) PUR cables are particularly suited for use in oil-contaminated environments.

2) PVC cables are particularly suited for use in wet environments.

Mounting on tandard gear units (R, F, K, S, W)

Adapter for mounting the PT1000 temperature sensor in screw plug holes:

Complete adapter for PT1000 sensor	Part number
M10 × 1	1 343 903 0
M12 × 1.5	1 343 904 9
M22 × 1.5	1 343 905 7
M33 × 2	1 343 906 5
M42 × 2	1 343 907 3

Mounting base for installing the diagnostic unit at the gear unit with an angle bracket:

Mounting base with sealing ring	Part number
M10 × 1	1 343 441 1
M12 × 1.5	1 343 827 1
M22 × 1.5	1 343 829 8
M33 × 2	1 343 830 1
M42 × 2	1 343 832 8

Technical data for vibration sensor

The DUV10A and DUV30A vibration sensors are suited for early detection of gearmotor damage, which can be detected using vibration diagnostics, such as bearing damage or imbalance. The highest load of the drives at constant speed must be present to being able to use the full functionality of the diagnostic unit. Drives in which the maximum load is present during acceleration are suitable for monitoring using vibration sensors to a limited degree only.

DUV10A diagnostic unit

/DUV10A	Technical data
Measuring range	± 20 g
Frequency range	0.125 ... 500 Hz
Spectral resolution	0.125 Hz
Diagnostic methods	FFT, envelope-FFT, trend analysis
Minimum measuring period	8.0 s
Speed range	12 - 3500 rpm
Switch outputs	1: Early warning 2: Main alarm
Operating voltage	DC 10-32 V
Current consumption at DC 24 V	100 mA
Protection class	III
EMC	IEC1000-4-2/3/4/6
Overload capacity	100 g
Ambient temperature	-30 °C to +60 °C
Degree of protection	IP67
Housing materials	Zinc die-casting, coating based on epoxy finish, polyester membrane keypad
Electrical connection for supply and switching output	M12 plug connector
Electrical connection RS-232 for communication	M8 plug connector
Certificates and standards	CE, UL

Designations and part numbers

Designation	Description	Part number
DUV10A 	Diagnostic unit (basic unit)	1 406 629 7
DUV10A-S	Configuration software	1 406 630 0
DUV10A-K-RS232-M8	Communication cable	1 406 631 9
DUV10A-N24DC	DC 24 V power supply unit	1 406 632 7
DUV10A-I	Pulse tester	1 406 633 5
DUV10A-K-M12-2m PUR	2 m PUR cable with 1 connector[1)]	1 406 634 3
DUV10A-K-M12-5m PUR	5 m PUR cable with 1 connector[1)]	1 406 635 1
DUV10A-K-M12-2m PVC	2 m PVC cable with 1 connector[2)]	1 326 620 9
DUV10A-K-M12-5m PVC	5 m PVC cable with 1 connector[2)]	1 326 621 7

1) PUR cables are particularly suited for use in oil-contaminated environments.

2) PVC cables are particularly suited for use in wet environments.

Mounting to standard gear units (R, F, K, S)

Mounting base for installing the diagnostic unit:

Mounting base with sealing ring for gear unit	Part number
M10 × 1	1 343 441 1
M12 × 1.5	1 343 827 1
M22 × 1.5	1 343 829 8
M33 × 2	1 343 830 1
M42 × 2	1 343 832 8
G ¾	1 343 833 6
G 1	1 343 834 4
G 1 ¼	1 343 835 2
G 1 ½	1 343 836 0
Mounting base for motors	**Part number**
M 8	1 362 261 7
M 12	1 343 842 5
M 16	1 343 844 1
M 20	1 362 262 5

6.14 Lubricants and fill quantities

General information

Unless a special arrangement is made, SEW-EURODRIVE supplies the drives with a lubricant fill adapted for the specific gear unit and mounting position. The decisive factor is the mounting position (M1 - M6, see chapter "Gear Unit Mounting Positions) specified when ordering the drive. You must adapt the lubricant fill in case of any subsequent changes made to the mounting position (see "Lubricant fill quantities").

INFORMATION

BS.F helical-bevel and PS.F planetary gear units from SEW-EURODRIVE are supplied exclusively with synthetic lubricants.

Food-grade lubricants are available from SEW-EURODRIVE on request.

The standard synthetic lubricant has a service life of approximately 5 years under normal operating conditions.

INFORMATION

SEW-EURODRIVE fills the gear units with the amount of oil specified for the specific mounting positions. When the mounting position is changed, the amount of oil must be adapted accordingly. Consequently, a **mounting position may only be changed** after consultation with SEW-EURODRIVE, otherwise your right to claim under warranty **no longer applies**.

Rolling bearing greases

The rolling bearings in gear units and motors are given a factory-fill with the greases listed below. SEW-EURODRIVE recommends regreasing rolling bearings with a grease fill at the same time as changing the oil or replacing the rolling bearings.

	Ambient temperature	Manufacturer	Type
Gear unit rolling bearings	-40 °C ... +80 °C	Fuchs	Renolit CX-TOM 15
	-40 °C ... +80 °C	Klüber	Petamo GHY 133 N
	-40 °C ... +40 °C	Castrol	Obeen FS 2
	-20 °C ... +40 °C	Fuchs	Plantogel 2S

INFORMATION

The following grease quantities are required:

- For fast-running bearings (gear unit input end): Fill the cavities between the rolling elements one-third full with grease.
- For slow-running bearings (in gear units and at gear unit output end): Fill the cavities between the rolling elements two-thirds full with grease.

Lubricant table

The lubricant table on the following page shows the permitted lubricants for SEW-EURODRIVE gear units. Observe the following key to the lubricant table.

Key to the lubricant table

Abbreviations, meaning of shading and notes:

CLP	= Mineral oil
CLP PG	= Polyglycol (W gear units, conforms to USDA-H1)
CLP HC	= Synthetic hydrocarbons
E	= Ester oil (water hazard classification 1)
HCE	= Synthetic hydrocarbons + ester oil (USDA - H1 certification)
HLP	= Hydraulic oil
	= Synthetic lubricant (= synthetic-based roller bearing grease)
	= Mineral lubricant (= mineral-based rolling bearing grease)
1)	Helical-worm gear units with PG oil: consult SEW-EURODRIVE.
2)	Special lubricant for SPIROPLAN® gear units only
3)	SEW-$f_B \geq 1.2$ required
4)	Observe the critical starting behavior at low temperatures.
5)	Low-viscosity grease
6)	Ambient temperature
	Lubricant for the food industry (food grade oil)
	Biodegradable oil (lubricant for agriculture, forestry, and water management)

Lubricant table

01 751 05 04

	6) °C -50 0 +50 +100	DIN (ISO)	ISO,NLGI	Mobil®	Shell		ARAL	bp	TEXACO	Castrol Tribol	Castrol Optimol	FUCHS	TOTAL
R...	Standard -15 +40	CLP(CC)	VG 220	Mobilgear 600 XP 220	Shell Omala 220	Klüberoil GEM 1-220 N	Aral Degol BG 220	BP Energol GR-XP 220	Meropa 220	Tribol 1100/220	Optigear BM 220	Renolin CLP 220	Carter EP 220
	-20 +80	CLP PG	VG 220	Mobil Glygoyle 220	Shell Tivela S 220	Klübersynth GH 6-220	Aral Degol GS 220	BP Enersyn SG-XP 220	Synlube CLP 220	Tribol 800/220	Optiflex A 220	Renolin PG 220	Carter SY 220
K...(HK...)	4) -20 +60	CLP HC	VG 220	Mobil SHC 630	Shell Omala HD 220	Klübersynth GEM 4-220 N	Aral Degol PAS 220		Pinnacle EP 220	Tribol 1510/220	Optigear Synthetic X 220	Renolin Unisyn CLP 220	
	4) -40 +40	CLP HC	VG 150	Mobil SHC 629	Shell Omala HD 150	Klübersynth GEM 4-150 N			Pinnacle EP 150		Optigear Synthetic X 150	Renolin Unisyn CLP 150	Carter SH 150
	-20 +25	CLP (CC)	VG 150 VG 100	Mobilgear 600 XP 100	Shell Omala 100	Klüberoil GEM 1-150 N	Aral Degol BG 100	BP Energol GR-XP 100	Meropa 150	Tribol 1100/100	Optigear BM 100	Renolin CLP 150	Carter EP 100
F...	-30 +10	HLP (HM)	VG 68-46 VG 32	Mobil DTE 10 Excel 32	Shell Tellus T 32	Klüberoil GEM 1-68 N	Aral Degol BG 46		Rando EP Ashless 46	Tribol 1100/68	Optigear 32	Renolin B 46 HVI	Equivis ZS 46
	4) -40 +20	CLP HC	VG 68	Mobil SHC 626	Shell Omala HD 68							Renolin Unisyn CLP 68	
	4) -40 +0	CLP HC	VG 32	Mobil SHC 624		Klüber-Summit HySyn FG-32			Cetus PAO 46		Optileb HY 32	Renolin Unisyn OL 32	Dacnis SH 32
	4) -40 -20	HLP (HM)	VG 22 VG 15	Mobil DTE 10 Excel 15	Shell Tellus T 15	Isoflex MT 30 ROT		BP Energol HLP-HM 15	Rando HDZ 15		Hyspin AWS 22	Renolin MR 310	Equivis ZS 15
S...(HS...)	Standard 0 +40	CLP (CC)	VG 680	Mobilgear 600 XP 680	Shell Omala 680	Klüberoil GEM 1-680 N	Aral Degol BG 680	BP Energol GR-XP 680	Meropa 680	Tribol 1100/680	Optigear BM 680	Renolin SEW 680	Carter EP 680
	-20 +80	CLP PG	VG 680 1)	Mobil Glygoyle 680	Shell Tivela S 680	Klübersynth GH 6-680		BP Enersyn SG-XP 680	Synlube CLP 680	Tribol 800/680	Optiflex A 680	Renolin PG 680	
	4) -20 +60	CLP HC	VG 460	Mobil SHC 634	Shell Omala HD 460	Klübersynth GEM 4-460 N			Pinnacle EP 460		Optigear Synthetic X 460	Renolin Unisyn CLP 460	
	4) -40 +30	CLP HC	VG 150	Mobil SHC 629	Shell Omala HD 150	Klübersynth GEM 4-150 N			Pinnacle EP 150		Optigear Synthetic X 150	Renolin Unisyn CLP 150	Carter SH 150
	-20 +10	CLP (CC)	VG 150 VG 100	Mobilgear 600 XP 100	Shell Omala 100	Klüberoil GEM 1-150 N	Aral Degol BG 100	BP Energol GR-XP 100	Meropa 150	Tribol 1100/100	Optigear BM 100	Renolin CLP 150	Carter EP 100
	-20 +40	CLP PG	VG 220 1)	Mobil Glygoyle 220	Shell Tivela S 220	Klübersynth GH 6-220	Aral Degol GS 220	BP Enersyn SG-XP 220	Synlube CLP 220	Tribol 800/220	Optiflex A 220	Renolin PG 220	Carter SY 220
	4) -40 +20	CLP HC	VG 68	Mobil SHC 626	Shell Omala HD 68							Renolin Unisyn CLP 68	
	4) -40 0	CLP HC	VG 32	Mobil SHC 624		Klüber-Summit HySyn FG-32			Cetus PAO 46		Alphasyn T32	Renolin Unisyn OL 32	Dacnis SH 32
R...K...(HK...), F...,S...(HS...)	4) -10 +40	CLPHC NSF H1	VG 460		Shell Cassida Fluid GL 460	Klüberoil 4UH1-460 N					Optileb GT 460	Geralyn SF 460	
	-20 +30		VG 220		Shell Cassida Fluid GL 220	Klüberoil 4UH1-220 N					Optileb GT 220		
	-40 0		VG 68		Shell Cassida Fluid HF 68	Klüberoil 4UH1-68 N					Optileb HY 68		
		E	VG 460			Klüberbio CA2-460				Tribol Bio Top 1418/460		Plantogear 460 S	
W...(HW...)	Standard -20 +40	CLP PG 460 -SEW	VG 460 2)			Klüber SEW HT-460-5							
	4) -40 +10	API GL5	SAE 75W90 (–VG 100)	Mobil Synthetic Gear Oil 75 W90									
		H1 PG	VG 460 2) 3)			Klübersynth UH1 6-460							
PS.F..	Standard -20 +40	CLP PG	VG 220			Klübersynth GH 6-220							
	-20 +60	H1 PG	VG 460 2) 3)			Klübersynth UH1 6-460							
	-40 0	CLP HC	VG 32	Mobil SHC 624									
PS.C..	Standard	CLP (CC)	VG 220	Mobilgear 600 XP 220									
	-20 +40	DIN 51 818	00 5)	Mobilux EP 004									
	-20 +40		1 7)			Klübersynth UH1 14-151							
	-40 0	CLP HC	VG 32	Mobil SHC 624									
BS.F..	Standard -40 +40	API GL5	SAE 75W90 (–VG 100)	Mobil Synth Gear Oil 75 W90									
	-20 +60	H1 PG	VG 460 2) 3)			Klübersynth UH1 6-460							

Lubricant fill quantities

The specified fill quantities are **recommended values**. The precise values vary depending on the number of stages and gear ratio. When filling, it is essential to check the **oil level plug since it indicates the precise oil volume**.

The following tables show guide values for lubricant fill quantities in relation to the mounting position M1 - M6.

Helical gear units (R)

RX..

Gear unit	Fill quantity in liters					
	M1	M2	M3	M4	M5	M6
RX57	0.60	0.80	1.30	1.30	0.90	0.90
RX67	0.80	0.80	1.70	1.90	1.10	1.10
RX77	1.10	1.50	2.60	2.70	1.60	1.60
RX87	1.70	2.50	4.80	4.80	2.90	2.90
RX97	2.10	3.40	7.4	7.0	4.80	4.80
RX107	3.90	5.6	11.6	11.9	7.7	7.7

RXF..

Gear unit	Fill quantity in liters					
	M1	M2	M3	M4	M5	M6
RXF57	0.50	0.80	1.10	1.10	0.70	0.70
RXF67	0.70	0.80	1.50	1.40	1.00	1.00
RXF77	0.90	1.30	2.40	2.00	1.60	1.60
RXF87	1.60	1.95	4.90	3.95	2.90	2.90
RXF97	2.10	3.70	7.1	6.3	4.80	4.80
RXF107	3.10	5.7	11.2	9.3	7.2	7.2

R.., R..F

Gear unit	Fill quantity in liters					
	M1[1)]	M2	M3	M4	M5	M6
R07	0.12	0.20	0.20	0.20	0.20	0.20
R17	0.25	0.55	0.35	0.55	0.35	0.40
R27	0.25/0.40	0.70	0.50	0.70	0.50	0.50
R37	0.30/0.95	0.85	0.95	1.05	0.75	0.95
R47	0.70/1.50	1.60	1.50	1.65	1.50	1.50
R57	0.80/1.70	1.90	1.70	2.10	1.70	1.70
R67	1.10/2.30	2.40	2.80	2.90	1.80	2.00
R77	1.20/3.00	3.30	3.60	3.80	2.50	3.40
R87	2.30/6.0	6.4	7.2	7.2	6.3	6.5
R97	4.60/9.8	11.7	11.7	13.4	11.3	11.7
R107	6.0/13.7	16.3	16.9	19.2	13.2	15.9
R137	10.0/25.0	28.0	29.5	31.5	25.0	25.0
R147	15.4/40.0	46.5	48.0	52.0	39.5	41.0
R167	27.0/70.0	82.0	78.0	88.0	66.0	69.0

1) The larger gear unit of multi-stage gear units must be filled with the larger oil volume.

RF..

Gear unit	Fill quantity in liters					
	M1[1)]	M2	M3	M4	M5	M6
RF07	0.12	0.20	0.20	0.20	0.20	0.20
RF17	0.25	0.55	0.35	0.55	0.35	0.40
RF27	0.25/0.40	0.70	0.50	0.70	0.50	0.50
RF37	0.35/0.95	0.90	0.95	1.05	0.75	0.95
RF47	0.65/1.50	1.60	1.50	1.65	1.50	1.50
RF57	0.80/1.70	1.80	1.70	2.00	1.70	1.70
RF67	1.20/2.50	2.50	2.70	2.80	1.90	2.10
RF77	1.20/2.60	3.10	3.30	3.60	2.40	3.00
RF87	2.40/6.0	6.4	7.1	7.2	6.3	6.4
RF97	5.1/10.2	11.9	11.2	14.0	11.2	11.8
RF107	6.3/14.9	15.9	17.0	19.2	13.1	15.9
RF137	9.5/25.0	27.0	29.0	32.5	25.0	25.0
RF147	16.4/42.0	47.0	48.0	52.0	42.0	42.0
RF167	26.0/70.0	82.0	78.0	88.0	65.0	71.0

1) The larger gear unit of multi-stage gear units must be filled with the larger oil volume.

Parallel shaft helical gear units (F)

F.., FA..B, FH..B, FV..B

Gear unit	Fill quantity in liters					
	M1	M2	M3	M4	M5	M6
F..27	0.60	0.80	0.65	0.70	0.60	0.60
F..37	0.95	1.25	0.70	1.25	1.00	1.10
F..47	1.50	1.80	1.10	1.90	1.50	1.70
F..57	2.60	3.50	2.10	3.50	2.80	2.90
F..67	2.70	3.80	1.90	3.80	2.90	3.20
F..77	5.9	7.3	4.30	8.0	6.0	6.3
F..87	10.8	13.0	7.7	13.8	10.8	11.0
F..97	18.5	22.5	12.6	25.2	18.5	20.0
F..107	24.5	32.0	19.5	37.5	27.0	27.0
F..127	40.5	54.5	34.0	61.0	46.3	47.0
F..157	69.0	104.0	63.0	105.0	86.0	78.0

FF..

Gear unit	Fill quantity in liters					
	M1	M2	M3	M4	M5	M6
FF27	0.60	0.80	0.65	0.70	0.60	0.60
FF37	1.00	1.25	0.70	1.30	1.00	1.10
FF47	1.60	1.85	1.10	1.90	1.50	1.70
FF57	2.80	3.50	2.10	3.70	2.90	3.00
FF67	2.70	3.80	1.90	3.80	2.90	3.20
FF77	5.9	7.3	4.30	8.1	6.0	6.3
FF87	10.8	13.2	7.8	14.1	11.0	11.2
FF97	19.0	22.5	12.6	25.6	18.9	20.5
FF107	25.5	32.0	19.5	38.5	27.5	28.0
FF127	41.5	55.5	34.0	63.0	46.3	49.0
FF157	72.0	105.0	64.0	106.0	87.0	79.0

FA.., FH.., FV.., FAF.., FAZ.., FHF.., FHZ.., FVF.., FVZ.., FT..

Gear unit	Fill quantity in liters					
	M1	M2	M3	M4	M5	M6
F..27	0.60	0.80	0.65	0.70	0.60	0.60
F..37	0.95	1.25	0.70	1.25	1.00	1.10
F..47	1.50	1.80	1.10	1.90	1.50	1.70
F..57	2.70	3.50	2.10	3.40	2.90	3.00
F..67	2.70	3.80	1.90	3.80	2.90	3.20
F..77	5.9	7.3	4.30	8.0	6.0	6.3
F..87	10.8	13.0	7.7	13.8	10.8	11.0
F..97	18.5	22.5	12.6	25.2	18.5	20.0
F..107	24.5	32.0	19.5	37.5	27.0	27.0
F..127	39.0	54.5	34.0	61.0	45.0	46.5
F..157	68.0	103.0	62.0	104.0	85.0	77.0

Helical-bevel gear units (K)

K.., KA..B, KH..B, KV..B

Gear unit	Fill quantity in liters					
	M1	M2	M3	M4	M5	M6
K..37	0.50	1.00	1.00	1.25	0.95	0.95
K..47	0.80	1.30	1.50	2.00	1.60	1.60
K..57	1.10	2.20	2.20	2.80	2.30	2.10
K..67	1.10	2.40	2.60	3.45	2.60	2.60
K..77	2.20	4.10	4.40	5.8	4.20	4.40
K..87	3.70	8.0	8.7	10.9	8.0	8.0
K..97	7.0	14.0	15.7	20.0	15.7	15.5
K..107	10.0	21.0	25.5	33.5	24.0	24.0
K..127	21.0	41.5	44.0	54.0	40.0	41.0
K..157	31.0	62.0	65.0	90.0	58.0	62.0
K..167	33.0	95.0	105.0	123.0	85.0	84.0
K..187	53.0	152.0	167.0	200	143.0	143.0

KF..

Gear unit	Fill quantity in liters					
	M1	M2	M3	M4	M5	M6
KF37	0.50	1.10	1.10	1.50	1.00	1.00
KF47	0.80	1.30	1.70	2.20	1.60	1.60
KF57	1.20	2.20	2.40	3.15	2.50	2.30
KF67	1.10	2.40	2.80	3.70	2.70	2.70
KF77	2.10	4.10	4.40	5.9	4.50	4.50
KF87	3.70	8.2	9.0	11.9	8.4	8.4
KF97	7.0	14.7	17.3	21.5	15.7	16.5
KF107	10.0	21.8	25.8	35.1	25.2	25.2
KF127	21.0	41.5	46.0	55.0	41.0	41.0
KF157	31.0	66.0	69.0	92.0	62.0	62.0

KA.., KH.., KV.., KAF.., KHF.., KVF.., KAZ.., KHZ.., KVZ.., KT..

Gear unit	Fill quantity in liters					
	M1	M2	M3	M4	M5	M6
K..37	0.50	1.00	1.00	1.40	1.00	1.00
K..47	0.80	1.30	1.60	2.15	1.60	1.60
K..57	1.20	2.20	2.40	3.15	2.70	2.40
K..67	1.10	2.40	2.70	3.70	2.60	2.60
K..77	2.10	4.10	4.60	5.9	4.40	4.40
K..87	3.70	8.2	8.8	11.1	8.0	8.0
K..97	7.0	14.7	15.7	20.0	15.7	15.7
K..107	10.0	20.5	24.0	32.4	24.0	24.0
K..127	21.0	41.5	43.0	52.0	40.0	40.0
K..157	31.0	66.0	67.0	87.0	62.0	62.0

Helical-worm gear units (S)

S

Gear unit	Fill quantity in liters					
	M1	M2	M3[1)]	M4	M5	M6
S..37	0.25	0.40	0.50	0.55	0.40	0.40
S..47	0.35	0.80	0.70/0.90	1.00	0.80	0.80
S..57	0.50	1.20	1.00/1.20	1.45	1.30	1.30
S..67	1.00	2.00	2.20/3.10	3.10	2.60	2.60
S..77	1.90	4.20	3.70/5.4	5.9	4.40	4.40
S..87	3.30	8.1	6.9/10.4	11.3	8.4	8.4
S..97	6.8	15.0	13.4/18.0	21.8	17.0	17.0

1) The larger gear unit of multi-stage gear units must be filled with the larger oil volume.

SF..

Gear unit	Fill quantity in liters					
	M1	M2	M3[1)]	M4	M5	M6
SF37	0.25	0.40	0.50	0.55	0.40	0.40
SF47	0.40	0.90	0.90/1.05	1.05	1.00	1.00
SF57	0.50	1.20	1.00/1.50	1.55	1.40	1.40
SF67	1.00	2.20	2.30/3.00	3.20	2.70	2.70
SF77	1.90	4.10	3.90/5.8	6.5	4.90	4.90
SF87	3.80	8.0	7.1/10.1	12.0	9.1	9.1
SF97	7.4	15.0	13.8/18.8	22.6	18.0	18.0

1) The larger gear unit of multi-stage gear units must be filled with the larger oil volume.

SA.., SH.., SAF.., SHZ.., SAZ.., SHF.., ST..

Gear unit	Fill quantity in liters					
	M1	M2	M3[1)]	M4	M5	M6
S..37	0.25	0.40	0.50	0.50	0.40	0.40
S..47	0.40	0.80	0.70/0.90	1.00	0.80	0.80
S..57	0.50	1.10	1.00/1.50	1.50	1.20	1.20
S..67	1.00	2.00	1.80/2.60	2.90	2.50	2.50
S..77	1.80	3.90	3.60/5.0	5.8	4.50	4.50
S..87	3.80	7.4	6.0/8.7	10.8	8.0	8.0
S..97	7.0	14.0	11.4/16.0	20.5	15.7	15.7

1) The larger gear unit of multi-stage gear units must be filled with the larger oil volume.

SPIROPLAN® gear units (W)

The fill quantity of SPIROPLAN® gear units W..10 to W..30 does not vary, irrespective of their mounting position. Only the fill quantities of SPRIOPLAN® gear units W..37 and W..47 in mounting position M4 are different from that of other mounting positions.

W.., WF.., WA..B, WH..B

Gear unit	Fill quantity in liters					
	M1	M2	M3	M4	M5	M6
W..10	0.16					
W..20	0.24					
W..30	0.40					
W..37	0.50			0.70	0.50	
W..47	0.90			1,40	0.90	

WA.., WAF.., WT.., WH.., WHF..

Gear unit	Fill quantity in liters					
	M1	M2	M3	M4	M5	M6
W..10	0.16					
W..20	0.24					
W..30	0.40					
W..37	0.50			0.70	0.50	
W..47	0.80			1,25	0.80	

BS.F gear units

The following tables show guide values for lubricant fill quantities in relation to the mounting position M1 - M6.

Fill quantities for BS.F helical-bevel gear units

BSF.. helical-bevel gear units	Fill quantity in liters					
	M1	M2	M3	M4	M5	M6
BSF202	0.15	0.25	0.25	0.30	0.25	0.25
BSF302	0.25	0.50	0.50	0.55	0.35	0.35
BSF402	0.45	0.80	0.80	1.05	0.65	0.65
BSF502	1.00	1.80	1.80	2.50	1.50	1.50
BSF602	1.60	2.50	2.80	4.10	2.00	2.60
BSF802	3.30	5.30	5.70	7.90	4.50	4.50

Fill quantity tolerance for BSF..

Fill quantity in liters	Tolerance
up to 1 l	0.01 l
> 1 l	1% of the fill quantity

PS.F gear units

The following tables show guide values for lubricant fill quantities in relation to the mounting position M1 - M6.

Fill quantities for PS.F planetary gear units

PSF.. planetary gear units	Direct mounting Fill quantity in liters		
	M1 (M3, M5, M6)	M2	M4
PSF121	0.023	0.037	0.023
PSF122	0.035	0.068	0.054
PSF221	0.035	0.063	0.035
PSF222	0.045	0.085	0.085
PSF321	0.070	0.120	0.070
PSF322	0.095	0.185	0.190
PSF521	0.140	0.245	0.150
PSF522	0.200	0.380	0.395
PSF621	0.300	0.500	0.320
PSF622	0.410	0.710	0.780
PSF721	0.600	1.060	0.650
PSF722	0.750	1.280	1.645
PSF821	-	-	-
PSF822	1.550	2.640	3.350
PSF921	-	-	-
PSF922	2.050	3.650	4.350

PSBF.. planetary gear units	Direct mounting Fill quantity in liters		
	M1 (M3, M5, M6)	M2	M4
PSBF221	0.025	0.051	0.025
PSBF222	0.035	0.074	0.060
PSBF321	0.045	0.085	0.050
PSBF322	0.070	0.145	0.130
PSBF521	0.093	0.168	0.103
PSBF522	0.143	0.308	0.273
PSBF621	0.198	0.358	0.188
PSBF622	0.298	0.568	0.498
PSBF721	0.404	0.544	0.314
PSBF722	0.544	0.834	1.004
PSBF821	-	-	-
PSBF822	0.995	1.895	1.995

Fill quantity tolerances for PS.F

Planetary gear units	Fill quantity in liters
PS.F121/122	± 0.001
PS.F221/222	± 0.001
PS.F321/322	± 0.002
PS.F521/522	± 0.005
PS.F621/622	± 0.005
PS.F721/722	± 0.010
PS.F821/822	± 0.010
PS.F921/922	± 0.010

7 Important Notes on Selection Tables and Dimension Sheets

7.1 Notes on the selection tables

M_{aDyn} in Nm		CMP							
	i	50S	50M	50L	63S	63M	63L	71S	71M
PSF321 1	3.00		31	46	33	64	90	57	91
	4.00	21	41	61	44	85	120	76	122
	5.00	26	51	76	55	106	150	95	152
	7.00	36	71	107	77	148	>168	133	>168
	10.00	51	102	>121	110				

Dynamic output torque M_{aDyn} of the drive

Gear unit reduction ratio

Gear unit size with number of gear unit stages

	The dark-gray fields contain preferred combinations
	Please contact SEW-EURODRIVE for more information about the light-gray fields.
	White fields mean: Combination not possible

INFORMATION

In fields marked with ">...", M_{aDyn} must not exceed the maximum permitted torque M_{apk} in short-term duty because the motor may overload the gear unit. The motor current I_{max} must be limited during startup.

m in kg		CMP							
	s	50S	50M	50L	63S	63M	63L	71S	71M
PSF321	1	6.7	7.6	8.5	8.0	9.5	11	12	13
PSF322	2	8.2	9.1	10.0	9.5	11	12	14	15

m Mass of the drive

s Number of gear unit stages

CMP..				M1;M3;M5-6			M2			M4			φ		
	i	n_{epk} 1/min	η %	a_0	a_1	a_2	a_0	a_1	a_2	a_0	a_1	a_2	'	/R '	/M '
PSF321 1	3.00	7000	99	205	-0.222	0	234	-0.327	0	288	-0.595	0	6	3	1
	4.00	7000	99	276	-0.316	0	312	-0.455	0	387	-0.833	0	6	3	1
	5.00	7000	99	290	-0.355	0	328	-0.501	0	414	-0.930	0	6	3	1
	7.00	7000	99	296	-0.418	0	335	-0.581	0	422	-1.036	0	6	3	1
	10.00	7000	99	269	-0.477	0	302	-0.617	0	374	-1.016	0	6	3	1

i Gear unit reduction ratio

n_{epk} Maximum permitted input speed for short-time duty

η Efficiency of the gear unit (at M_{apk}, n_e=1500 rpm, mounting position M1, S1 duty cycle)

φ Circumferential backlash

a_0, a_1, a_2 Gear unit constants as regards the rise in temperature in the gear unit

CMP.. n_e = 1500	i	M_{amax} Nm	M_{apk} Nm	$M_{aNotaus}$ Nm	n_{ak} 1/min	J_{GA} 10^{-4} kgm^2	c_T PSF Nm/'	F_{Ramax} PSF N	F_{Rapk} PSF N
PSF321 1	3.00	85	125	188	2333	0.69	11	4380	5280
	4.00	110	170	255	1750	0.35	12	4770	4420
	5.00	110	169	250	1400	0.22	12	5100	4450
	7.00	110	168	250	1000	0.12	10	5480	4470
	10.00	110	121	182	700	0.059	7.6	5480	5330

i	Gear unit reduction ratio
M_{amax}	Maximum permitted output torque for continuous duty
M_{apk}	Maximum permitted output torque for short-time duty
$M_{aNotaus}$	Maximum permitted output emergency stop torque, max. 1000 emergency stops
n_{ak}	Breakpoint speed (output)
J_{GA}	Mass moment of inertia of the gear unit with reference to the input shaft
c_T	Torsional rigidity of the gear unit
F_{Ramax}	Maximum permitted overhung load at the output shaft for continuous duty, load application point is the center of the shaft end
F_{Rapk}	Maximum permitted overhung load at the output shaft for short-time duty, load application point is the center of the shaft end

7.2 Notes on dimension sheets

Scope of delivery

= Standard parts supplied by SEW-EURODRIVE.

= Standard parts not supplied by SEW-EURODRIVE.

Tolerances

Shaft heights

The following tolerances apply to the indicated dimensions:

h ≤ 250 mm → -0.5 mm
h > 250 mm → -1 mm

Foot-mounted gear units: Check the mounted motor because it may project below the mounting surface.

Shaft ends

Diameter tolerance:

∅ ≤ 50 mm → ISO k6
∅ > 50 mm → ISO m6

Center bores according to DIN 332, shape DR:

∅	= 7 - 10 mm	→ M3	∅	> 30 - 38 mm	→ M12
∅	> 10 - 13 mm	→ M4	∅	> 38 - 50 mm	→ M16
∅	> 13 - 16 mm	→ M5	∅	> 50 - 85 mm	→ M20
∅	> 16 - 21 mm	→ M6	∅	> 85 - 130 mm	→ M24
∅	> 21 - 24 mm	→ M8	∅	> 130 mm	→ M30
∅	> 24 - 30 mm	→ M10			

Keys: according to DIN 6885 (domed type)

Hollow shafts

Diameter tolerance:

∅ → ISO H7 measured with plug gauge

Keys: according to DIN 6885 (domed type)

Exception: Key for WA37 with shaft ∅ 25 mm according to DIN 6885-3 (low form)

Multiple-spline shafts

Dm = Measuring roller diameter
Me = Check gauge

Flanges

Centering shoulder tolerance:

∅ ≤ 230 mm (flange sizes A120 - A300) → ISO j6
∅ > 230 mm (flange sizes A350 - A660) → ISO h6

Up to 3 different flange dimensions are available for each size of helical gear units,SPIROPLAN® gear units, AC (brake)motors and explosion-proof AC (brake)motors. The dimension sheets show the possible flanges for the respective sizes.

Eyebolts, lifting eyes

R07 - R27 helical gear units and SPIROPLAN® gearmotors W..10 to W..30 are delivered without special transportation fixtures. All other gear units and motors are equipped with cast-on suspension eye lugs, screw-on suspension eye lugs or screw-on lifting eyebolts.

Gear unit/motor type	screw-on,		cast-on eyebolts
	lifting eyebolts	eyebolts	
R..37-R..57	-	•	-
R..67 - R..167	•	-	-
RX57 - RX67	-	•	-
RX77 - RX107	•	-	-
F..27 - F..157	-	-	•
K..37 - K..157	-	-	•
K..167 - K..187	•	-	-
W..37, W..47	-	•	-
S..37 - S..47	-	•	-
S..57 - S..97	-	-	•
BS.F502 - 802	-	•	-
PS.F621 - 921	-	•	-
PS.F622 - 922	-	•	-

Breather valves

The gear unit dimension drawings always show the screw plugs. The corresponding screw plug is replaced by an activated breather valve at the factory depending on the ordered mounting position M1 to M6. Contour dimensions might be slightly different as a result.

Shrink disk connection

Hollow shaft gear unit with shrink disk connection: If required, please request a detailed data sheet on shrink disks, data sheet no. 33 753 ..95.

Splined shaft

FV.. hollow shaft gear unit sizes 27 to 107 and KV.. sizes 37 to 107 are supplied with splining according to DIN 5480.

Rubber buffers for FA/FH/FV/FT

Preload rubber buffer by the indicated value △L. The characteristic curve of spring for the rubber buffers is available at SEW-EURODRIVE on request.

Position of the torque arm

The following illustration shows the possible torque arm positions for helical-worm, SPIROPLAN® and BS.F gear units as well as the respective angles:

Position of the torque arm for S and W gear units:

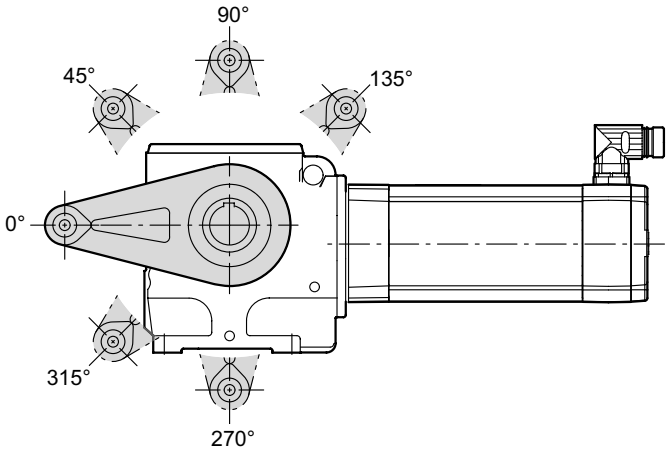

65958axx

For information on torque arms for helical-worm gearmotors, refer to the dimension sheets from page 440, for specifications on torque arms for SPIROPLAN® gearmotors, refer to the dimension sheets from page 488.

Position of the torque arm for BS.F gear units:

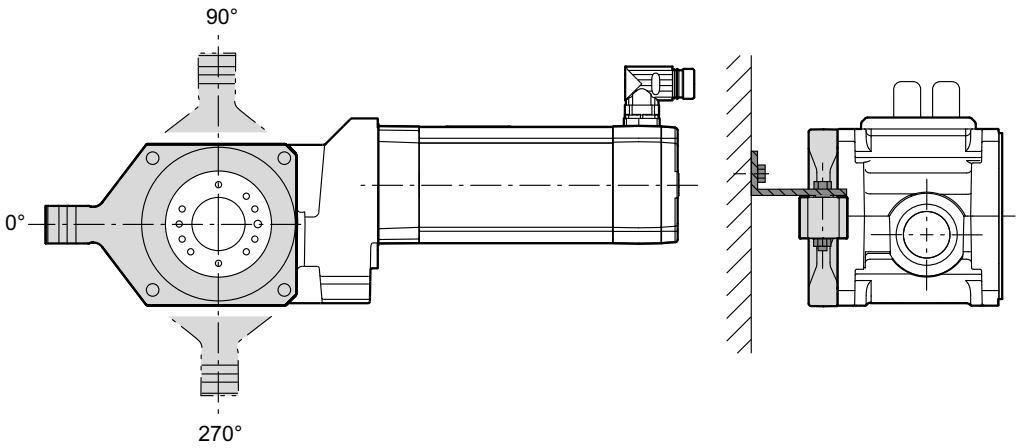

65957axx

You find specifications regarding the torque arms of helical-bevel gearmotors on page 564.

Tolerances and chamfers of flange block gear units

Internal centering	→ ISO H7
External centering	→ ISO h7

You find additional information on page 565 or page 628.

Front and foot-end mounting of BS.F..B gear units

For detailed information, refer to page 563.

7.3 Gearmotor dimensions

Motor options

The motor dimensions may change due to motor options. Refer to the dimension drawings of the motor options.

Special designs

The terminal box dimensions in special designs might vary from the standard.

EN 50347

European standard EN 50347 became effective in August 2001. This standard adopts the dimension designations for three-phase AC motors of size 56 to 315M and flange size 65 to 740 from the IEC 72-1 standard.

The new dimension designations given in EN 50347 / IEC 72-1 are used for the relevant dimensions in the dimension sheet tables.

Dimension designations for gearmotors

Below an overview of dimension designations for gearmotors:

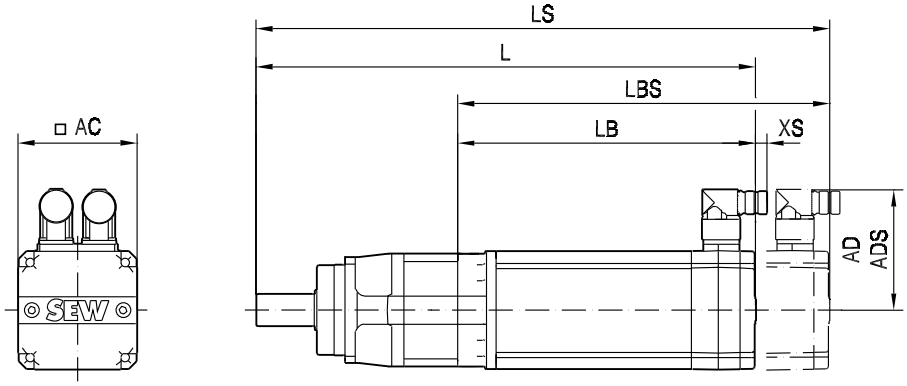

63003axx

L	Total length of gearmotor	AC	Diameter of motor
LS	Total length of the gearmotor including the brake	AD	Center of motor shaft to top part of terminal box
LB	Length of motor	ADS	Center of brakemotor shaft to top part of terminal box
LBS	Length of brakemotor	XS	Projecting length of the plug connector beyond the motor housing

	INFORMATION
	For motors with other feedback systems than resolvers, possible additional lengths must be considered.

7.4 Dimensions for CMPZ motors

CMPZ motors differ from CMP motors in the additional rotor mass. This additional rotor mass makes CMPZ motors longer than CMP motors.

For additional lengths of CMPZ motors, refer to the tables in chapter "Technical data of CMPZ motors" on page 522 and subsequent pages.

8 R..CMP

8.1 R, RF, R..F, RX, RXF..CMP

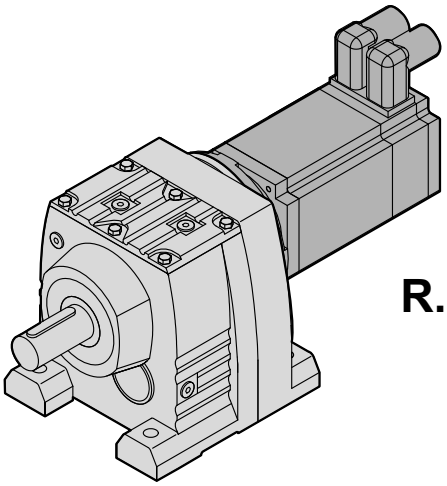

R..CMP..

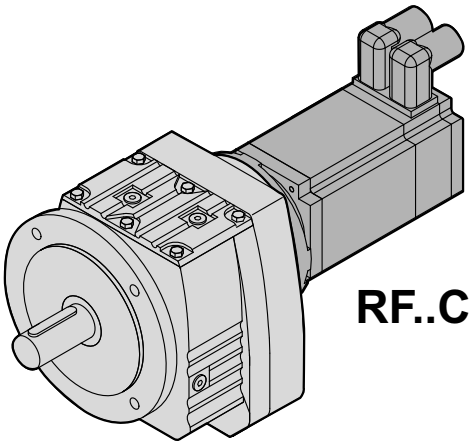

RF..CMP..

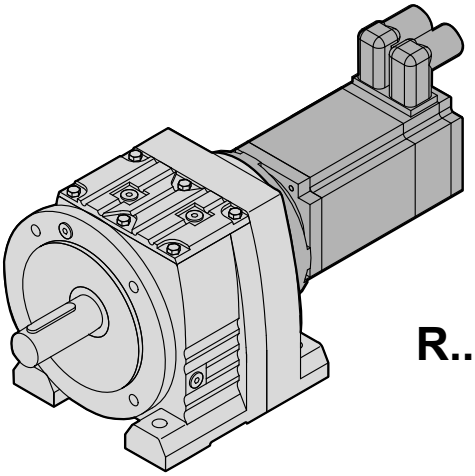

R..F CMP..

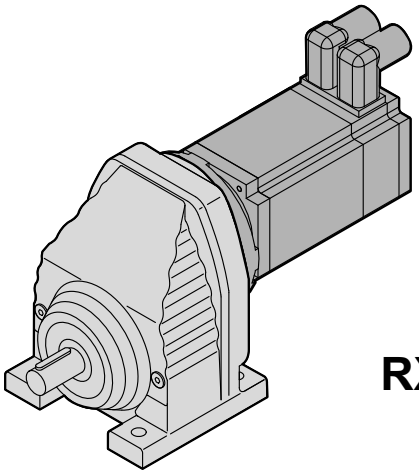

RX..CMP..

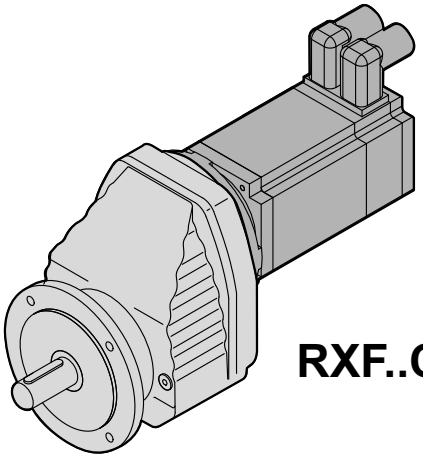

RXF..CMP..

65960axx

8.2 RX..[mm]

8.2.1 RX 57

M_{aDyn} [Nm]		CMP											
	i	50S	50M	50L	63S	63M	63L	71S	71M	71L	80S	80M	100S
RX57 1	1.30	6.6	13	20	14	27	39	24	39	60	54	80	87
	1.48	7.5	15	22	16	31	44	28	45	68	61	>90	>90
	1.65	8.4	17	25	18	35	49	31	50	76	68	>90	>90
	1.92	9.8	19	29	21	40	57	36	58	88	79	>90	>90
	2.04	10	21	31	22	43	61	38	62	>90	84	>90	>90
	2.37	12	24	36	26	50	71	45	72	>90	>90		
	2.64	13	27	40	29	55	79	50	80	>90	>90		
	2.91	15	29	44	32	61		55					
	3.14	16	32	47	34	66	>90	59	>90				
	3.55	18	36	54	39	74		67					
	3.79	19	38	57	41	79		71					
	4.35	22	44		47								
	5.07	26											
	5.50	28											

→ 📖 144

m [kg]		CMP											
	s	50S	50M	50L	63S	63M	63L	71S	71M	71L	80S	80M	100S
RX57	1	13	14	14	15	16	18	18	19	22	24	26	33
RXF: + 1.9 kg													

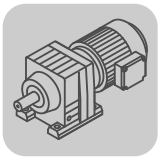

R..CMP
RX..[mm]

CMP..				c_{TG}	
	i	n_{epk} [1/min]	η [%]	RX [Nm/']	RXF [Nm/']
RX57 1	1.30	2483	98	4.2	4.2
	1.48	2827	98	4.2	4.2
	1.65	3151	98	4.2	4.2
	1.92	3667	98	4.2	4.2
	2.04	3896	98	4.2	4.2
	2.37	4500	98	4.2	4.2
	2.64	4500	98	4.2	4.2
	2.91	4500	98	4.2	4.2
	3.14	4500	98	4.2	4.2
	3.55	4500	98	4.2	4.2
	3.79	4500	98	4.2	4.2
	4.35	4500	98	4.2	4.2
	5.07	4500	98	4.2	4.2
	5.50	4500	98	4.2	4.2

CMP..							F_{Ramax}		F_{Rapk}	
n_e = 1400	i	M_{amax} [Nm]	M_{apk} [Nm]	$M_{aNotaus}$ [Nm]	n_{ak} [1/min]	J_G 10^{-4} [kgm^2]	RX [N]	RXF [N]	RX [N]	RXF [N]
RX57 1	1.30	63	90	107	1154	1.9	132	132	3940	3940
	1.48	68	90	116	1014	1.4	112	112	3950	3950
	1.65	69	90	117	1091	1.2	430	430	3960	3960
	1.92	69	90	117	1250	0.94	880	880	3970	3970
	2.04	69	90	117	1324	0.85	1070	1070	3970	3970
	2.37	69	90	117	1477	0.64	1500	1500	3980	3980
	2.64	69	90	117	1629	0.55	1810	1810	3980	3980
	2.91	67	90	114	1856	0.44	2170	2170	3980	3980
	3.14	65	90	111	2197	0.42	2320	2320	3990	3990
	3.55	69	90	117	1972	0.35	2420	2420	3990	3990
	3.79	69	90	117	1847	0.32	2480	2480	3990	3990
	4.35	68	90	116	1609	0.26	2640	2640	4000	4000
	5.07	36	54	61	1381	0.21	3030	3030	4210	4210
	5.50	39	58	66	1273	0.18	3100	3100	4190	4190

01 013 00 07

RX57..

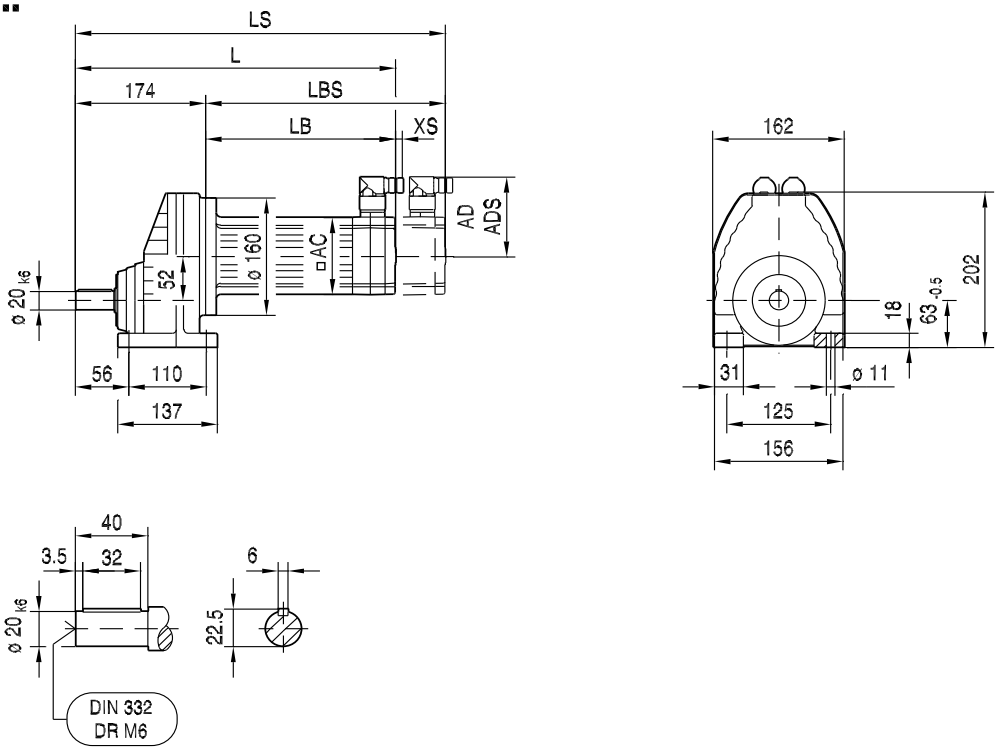

(→ 144)	CMP50M	CMP50L	CMP63S	CMP63M	CMP63L	CMP71S	CMP71M	CMP71L	CMP80S	CMP80M	CMP100S
AC	73	73	88	88	88	115	115	115	137	137	162
AD	86	86	92	92	92	102	102	102	134	134	146
ADS	86	86	92	92	92	104	104	104	137	137	147
L	352	391	347	397	447	340	365	415	380	418	416
LS	381	420	376	426	476	405	430	480	458	496	512
LB	178	217	173	223	273	166	191	241	206	244	242
LBS	207	246	202	252	302	231	256	306	284	322	338
XS	18	18	14	14	14	11	11	11	37	37	37

01 014 00 07

RXF57..

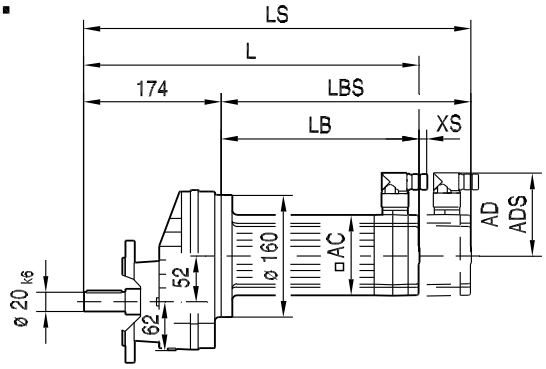

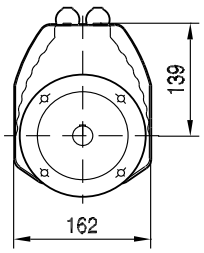

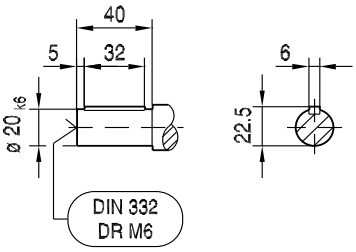

ø 140

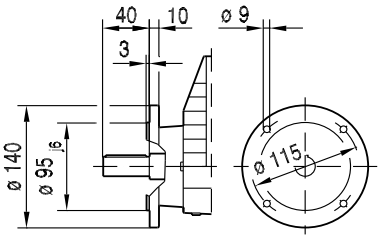

ø 160

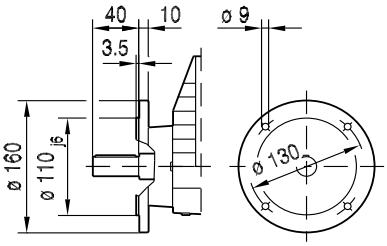

ø 200

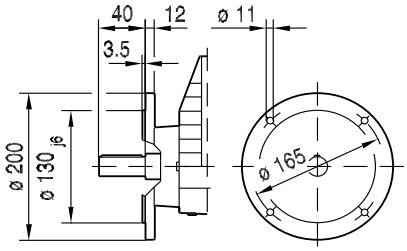

(→ 📖 144)	CMP50M	CMP50L	CMP63S	CMP63M	CMP63L	CMP71S	CMP71M	CMP71L	CMP80S	CMP80M	CMP100S
AC	73	73	88	88	88	115	115	115	137	137	162
AD	86	86	92	92	92	102	102	102	134	134	146
ADS	86	86	92	92	92	104	104	104	137	137	147
L	352	391	347	397	447	340	365	415	380	418	416
LS	381	420	376	426	476	405	430	480	458	496	512
LB	178	217	173	223	273	166	191	241	206	244	242
LBS	207	246	202	252	302	231	256	306	284	322	338
XS	18	18	14	14	14	11	11	11	37	37	37

8.2.2 RX 67

M_{aDyn} [Nm]		CMP											
	i	50S	50M	50L	63S	63M	63L	71S	71M	71L	80S	80M	100S
RX67 1	1.40		14	21	15	30	42	27	43	65	58	87	95
	1.61	8.3	16	25	18	34	48	31	49	75	67	100	109
	1.86	9.6	19	28	20	39	56	35	57	86	78	115	126
	2.04	11	21	31	22	43	61	39	62	95	85	126	138
	2.40	12	24	37	26	51	72	46	73	111	100	149	162
	2.54	13	26	39	28	54	76	48	77	118	106	157	>162
	2.89	15	29	44	31	61	86	54	87	133	119		
	3.20	16	32	48	35	67	95	60	97	>142	132		
	3.77	19	38	57	41	79	112	71	114				
	4.30	22	43	65	47	90		81					
	4.53	23	46	68	49	95		85					
	5.18	26	52		56								
	6.07	31											

→ 144

m [kg]		CMP											
	s	50S	50M	50L	63S	63M	63L	71S	71M	71L	80S	80M	100S
RX67	1	15	16	17	17	19	20	21	22	24	27	29	35
RXF: + 4.0 kg													

CMP..		n_{epk}	η	c_{TG}	
				RX	RXF
	i	[1/min]	[%]	[Nm/']	[Nm/']
RX67 1	1.40	2507	99	8.1	8.1
	1.61	2883	99	8.1	8.1
	1.86	3330	99	8.1	8.1
	2.04	3653	99	8.1	8.1
	2.40	4297	99	8.1	8.1
	2.54	4500	99	8.1	8.1
	2.89	4500	98	8.1	8.1
	3.20	4500	98	8.1	8.1
	3.77	4500	98	8.1	8.1
	4.30	4500	98	8.1	8.1
	4.53	4500	98	8.1	8.1
	5.18	4500	98	8.1	8.1
	6.07	4500	98	8.1	8.1

CMP..							F_{Ramax}		F_{Rapk}	
n_e = 1400		M_{amax}	M_{apk}	$M_{aNotaus}$	n_{ak}	J_G 10^{-4}	RX	RXF	RX	RXF
	i	[Nm]	[Nm]	[Nm]	[1/min]	[kgm^2]	[N]	[N]	[N]	[N]
RX67 1	1.40	104	156	177	1071	3.2	205	205	5450	5450
	1.61	114	171	194	932	2.6	245	245	5380	5380
	1.86	126	187	214	806	2.1	225	225	5300	5300
	2.04	134	186	228	735	1.8	230	230	5310	5310
	2.40	123	163	209	1125	1.4	1530	1530	5460	5460
	2.54	118	162	201	1339	1.3	2000	2000	5470	5470
	2.89	106	142	180	1972	1.0	2640	2640	5590	5590
	3.20	100	142	170	2188	0.88	2800	2800	5590	5590
	3.77	87	130	148	1857	0.69	3090	3090	5660	5660
	4.30	80	109	136	1628	0.47	3300	3300	5770	5770
	4.53	82	110	139	1545	0.42	3350	3350	5760	5760
	5.18	75	110	128	1351	0.34	3580	3580	5760	5760
	6.07	43	64	73	1153	0.28	4000	4000	5970	5970

01 015 00 07

RX67..

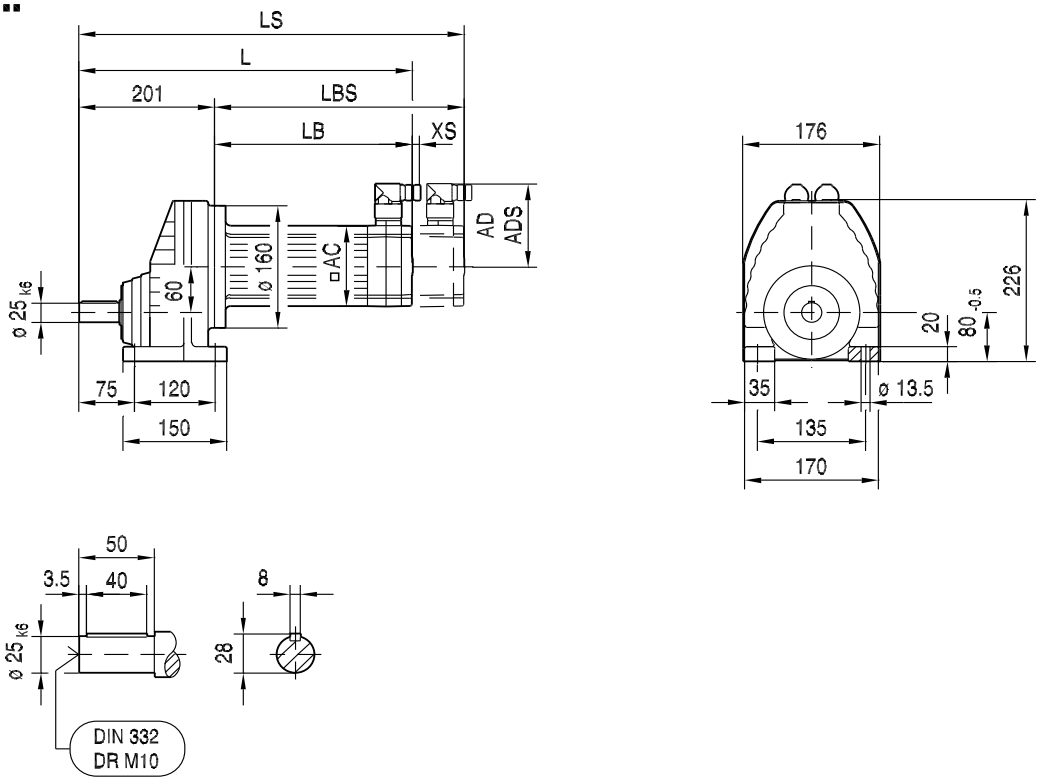

(→ 📖 144)	CMP50M	CMP50L	CMP63S	CMP63M	CMP63L	CMP71S	CMP71M	CMP71L	CMP80S	CMP80M	CMP100S
AC	73	73	88	88	88	115	115	115	137	137	162
AD	86	86	92	92	92	102	102	102	134	134	146
ADS	86	86	92	92	92	104	104	104	137	137	147
L	379	418	374	424	474	367	392	442	407	445	443
LS	408	447	403	453	503	432	457	507	485	523	539
LB	178	217	173	223	273	166	191	241	206	244	242
LBS	207	246	202	252	302	231	256	306	284	322	338
XS	18	18	14	14	14	11	11	11	37	37	37

01 016 00 07

RXF67..

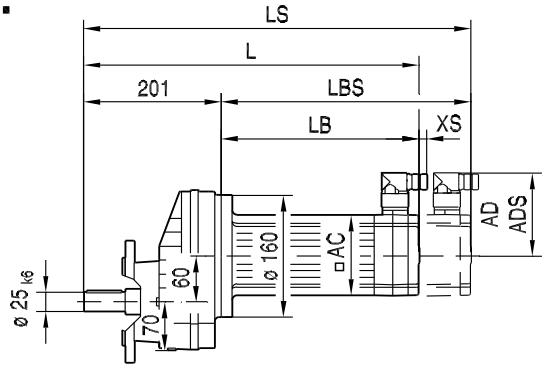

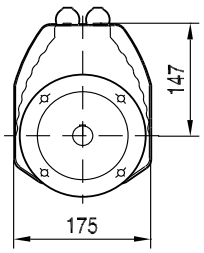

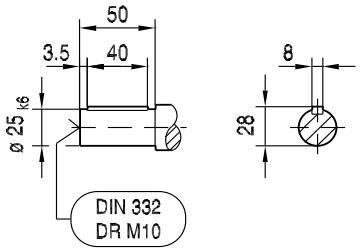

ø 160

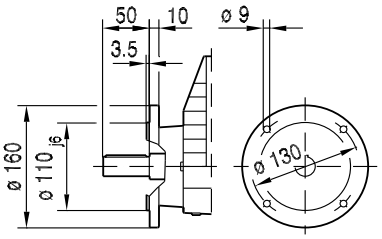

ø 200

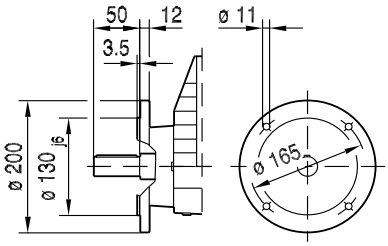

ø 250

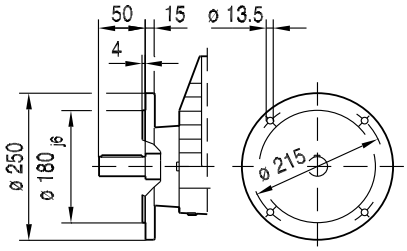

(→ 📖 144)	CMP50M	CMP50L	CMP63S	CMP63M	CMP63L	CMP71S	CMP71M	CMP71L	CMP80S	CMP80M	CMP100S
AC	73	73	88	88	88	115	115	115	137	137	162
AD	86	86	92	92	92	102	102	102	134	134	146
ADS	86	86	92	92	92	104	104	104	137	137	147
L	379	418	374	424	474	367	392	442	407	445	443
LS	408	447	403	453	503	432	457	507	485	523	539
LB	178	217	173	223	273	166	191	241	206	244	242
LBS	207	246	202	252	302	231	256	306	284	322	338
XS	18	18	14	14	14	11	11	11	37	37	37

8.2.3 RX 77

M_{aDyn} [Nm]		CMP											
	i	63S	63M	63L	71S	71M	71L	80S	80M	80L	100S	100M	100L
RX77 1	1.42	15	30	42	27	43	65	59	87	149	95	150	>230
	1.67	18	35	50	32	51	78	70	103	177	113	179	>255
	1.88	21	40	57	36	57	87	78	117	199	127	200	>280
	2.13	23	45	64	40	65	99	89	132	225	144	225	>300
	2.43	27	51	73	46	74	113	101	151	255	164	255	>305
	2.70	30	57	81	51	82	125	113	167		183		
	3.08	34	65	93	59	94	143	128	191		205		
	3.25	35	68	97	61	98	149	134	199		215		
	3.70	40	78	110	70	112	170	153					
	4.04	44	85	120	76	122	186	167					
	4.73	51	99	141	89	143							
	5.35	58	112		101								
	5.63	61	118		106								
	6.41	70											
	7.47												
	8.00												

→ 📖 144

m [kg]		CMP											
	s	63S	63M	63L	71S	71M	71L	80S	80M	80L	100S	100M	100L
RX77	1	26	28	29	31	32	35	36	38	42	43	47	56
RXF: + 2.3 kg													

CMP..	i	n_{epk} [1/min]	η [%]	c_{TG} RX [Nm/']	c_{TG} RXF [Nm/']
RX77 1	1.42	2164	98	17	17
	1.67	2545	99	17	17
	1.88	2865	99	17	17
	2.13	3246	99	17	17
	2.43	3703	99	17	17
	2.70	4114	99	17	17
	3.08	4500	99	17	17
	3.25	4500	98	17	17
	3.70	4500	98	17	17
	4.04	4500	98	17	17
	4.73	4500	98	17	17
	5.35	4500	98	17	17
	5.63	4500	98	17	17
	6.41	4500	98	17	17
	7.47	4500	97	17	17
	8.00	4500	97	17	17

CMP.. n_e = 1400	i	M_{amax} [Nm]	M_{apk} [Nm]	$M_{aNotaus}$ [Nm]	n_{ak} [1/min]	J_G 10^{-4} [kgm^2]	F_{Ramax} RX [N]	F_{Ramax} RXF [N]	F_{Rapk} RX [N]	F_{Rapk} RXF [N]
RX77 1	1.42	155	232	264	1056	7.6	315	315	10000	10000
	1.67	173	259	294	898	6.0	315	315	10000	10000
	1.88	187	280	318	798	5.0	335	335	10000	10000
	2.13	200	300	340	704	4.1	435	435	10000	10000
	2.43	215	305	366	658	3.4	510	510	10000	10000
	2.70	215	285	366	741	3.0	1110	1110	10000	10000
	3.08	193	260	328	1104	2.5	2560	2560	10000	10000
	3.25	182	260	309	1385	2.3	3200	3200	10000	10000
	3.70	153	215	260	1892	1.9	4290	4290	10000	10000
	4.04	143	214	243	1733	1.6	4500	4500	10000	10000
	4.73	123	184	209	1480	1.3	4900	4900	10000	10000
	5.35	103	154	175	1308	0.90	5240	5240	10000	10000
	5.63	110	165	187	1243	0.81	5300	5300	10000	10000
	6.41	103	154	175	1092	0.66	5600	5600	10000	10000
	7.47	53	79	90	937	0.53	6200	6200	10000	10000
	8.00	57	85	97	875	0.46	6330	6330	10000	10000

01 017 00 07

RX77..

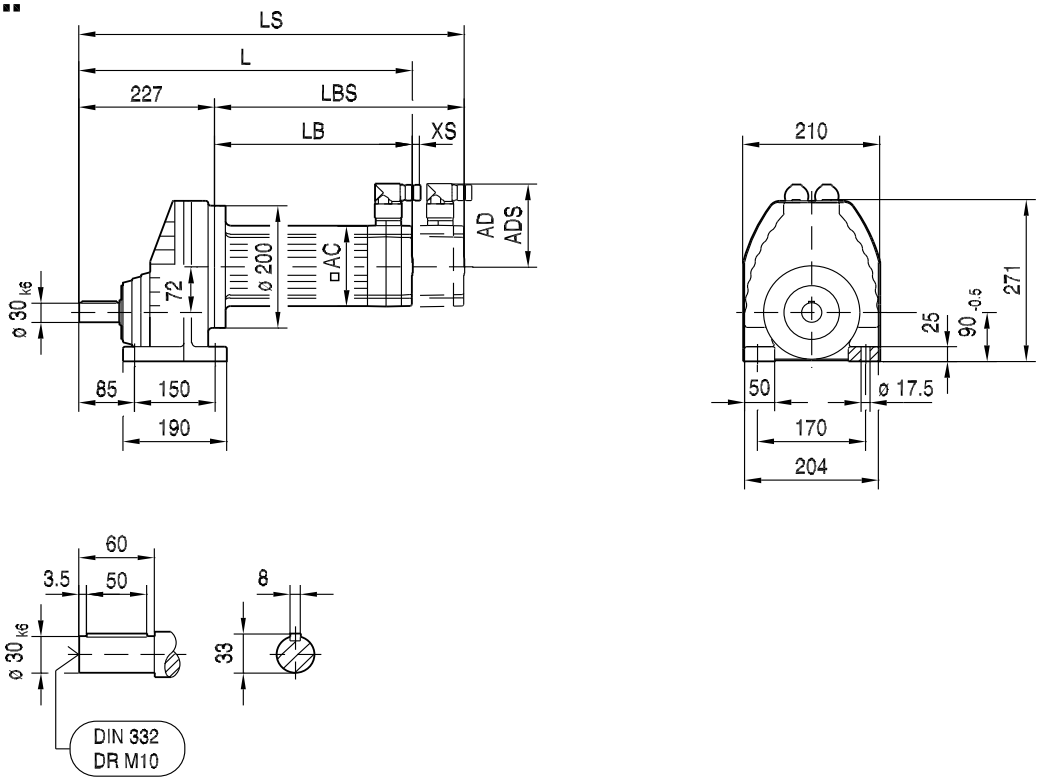

(→ 📖 144)	CMP63M	CMP63L	CMP71S	CMP71M	CMP71L	CMP80S	CMP80M	CMP80L	CMP100S	CMP100M	CMP100L
AC	88	88	115	115	115	137	137	137	162	162	162
AD	92	92	102	102	102	134	134	134	146	146	146
ADS	92	92	104	104	104	137	137	137	147	147	147
L	444	494	385	410	460	425	459	527	457	497	577
LS	473	523	450	475	525	503	537	605	553	593	673
LB	217	267	158	183	233	198	232	300	230	270	350
LBS	246	296	223	248	298	276	310	378	326	366	446
XS	14	14	11	11	11	37	37	37	37	37	37

01 018 00 07

RXF77..

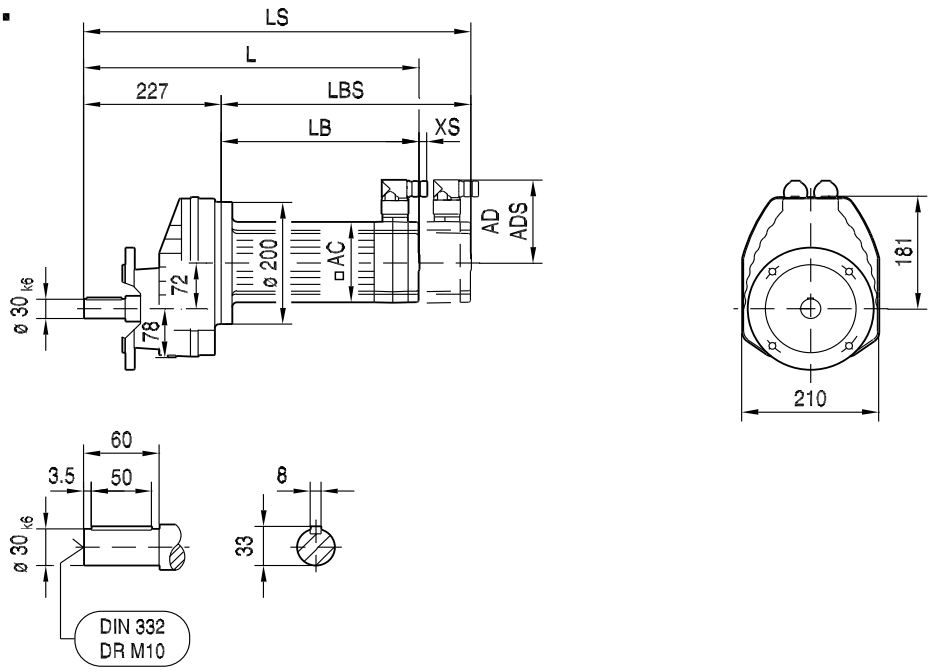

ø 200

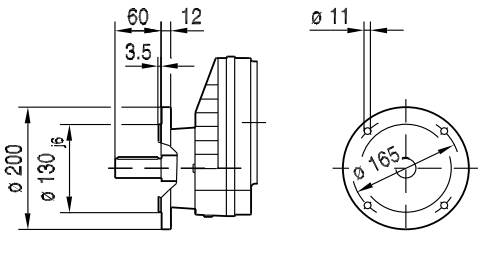

ø 250

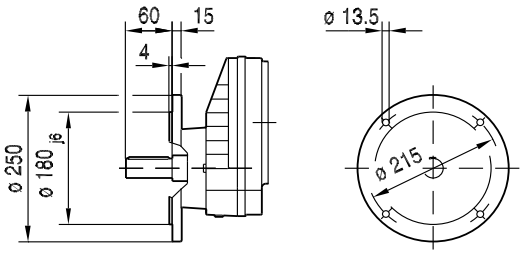

(→ 144)	CMP63M	CMP63L	CMP71S	CMP71M	CMP71L	CMP80S	CMP80M	CMP80L	CMP100S	CMP100M	CMP100L
AC	88	88	115	115	115	137	137	137	162	162	162
AD	92	92	102	102	102	134	134	134	146	146	146
ADS	92	92	104	104	104	137	137	137	147	147	147
L	444	494	385	410	460	425	459	527	457	497	577
LS	473	523	450	475	525	503	537	605	553	593	673
LB	217	267	158	183	233	198	232	300	230	270	350
LBS	246	296	223	248	298	276	310	378	326	366	446
XS	14	14	11	11	11	37	37	37	37	37	37

8.2.4 RX 87

M_{aDyn} [Nm]		CMP								
	i	71S	71M	71L	80S	80M	80L	100S	100M	100L
RX87 1	1.39					86	147	94	149	245
	1.60		49	74	67	99	169	108	171	280
	1.93		59	90	80	120	200	131	205	340
	2.15	41	66	100	90	133	225	145	225	380
	2.48	47	76	115	103	154	260	168	265	435
	2.76	52	84	128	115	171	290	187	295	485
	3.09	59	94	143	129	191	325	205	330	>540
	3.48	66	106	162	145	215	365	235	370	>540
	3.78	72	115	176	158	230		255		
	4.50	85	136	205	186	275		300		
	5.07	95	153	230	205					
	5.56	105	168	255	225					
	6.45	121	195							
	7.20	135								
	7.63	144								
	8.65									

→ 📖 144

m [kg]		CMP								
	s	71S	71M	71L	80S	80M	80L	100S	100M	100L
RX87	1	48	49	51	54	56	60	58	62	71
RXF: + 5.0 kg										

CMP..	i	n_{epk} [1/min]	η [%]	c_{TG} RX [Nm/']	c_{TG} RXF [Nm/']
RX87 1	1.39	2170	99	34	34
	1.60	2498	99	34	34
	1.93	3013	99	34	34
	2.15	3356	99	34	34
	2.48	3871	99	34	34
	2.76	4308	99	34	34
	3.09	4500	99	34	34
	3.48	4500	99	34	34
	3.78	4500	99	34	34
	4.50	4500	98	34	34
	5.07	4500	98	34	34
	5.56	4500	98	34	34
	6.45	4500	98	34	34
	7.20	4500	98	34	34
	7.63	4500	98	34	34
	8.65	4500	98	34	34

8

CMP.. n_e = 1400	i	M_{amax} [Nm]	M_{apk} [Nm]	$M_{aNotaus}$ [Nm]	n_{ak} [1/min]	J_G 10^{-4} [kgm^2]	F_{Ramax} RX [N]	F_{Ramax} RXF [N]	F_{Rapk} RX [N]	F_{Rapk} RXF [N]
RX87 1	1.39	290	435	493	1007	25	74	74	12700	12700
	1.60	315	472	536	875	19	74	74	12500	12500
	1.93	355	532	604	725	15	185	185	12300	12300
	2.15	385	540	655	651	13	42	42	12300	12300
	2.48	405	540	689	605	11	470	470	12300	12300
	2.76	405	535	689	652	9.4	1200	1200	12400	12400
	3.09	405	540	689	744	8.1	1950	1950	12400	12400
	3.48	405	540	689	805	6.9	2730	2730	12400	12400
	3.78	305	457	519	1852	6.2	5030	5030	12700	12700
	4.50	290	435	493	1556	4.8	5500	5500	12800	12800
	5.07	250	375	425	1381	3.9	5980	5980	13000	13000
	5.56	225	337	383	1259	3.4	6320	6320	13000	13000
	6.45	192	288	326	1085	2.7	6850	6850	13000	13000
	7.20	140	210	238	972	1.8	7380	7380	13000	13000
	7.63	149	223	253	917	1.6	7490	7490	13000	13000
	8.65	139	208	236	809	1.3	7890	7890	13000	13000

01 019 00 07

RX87..

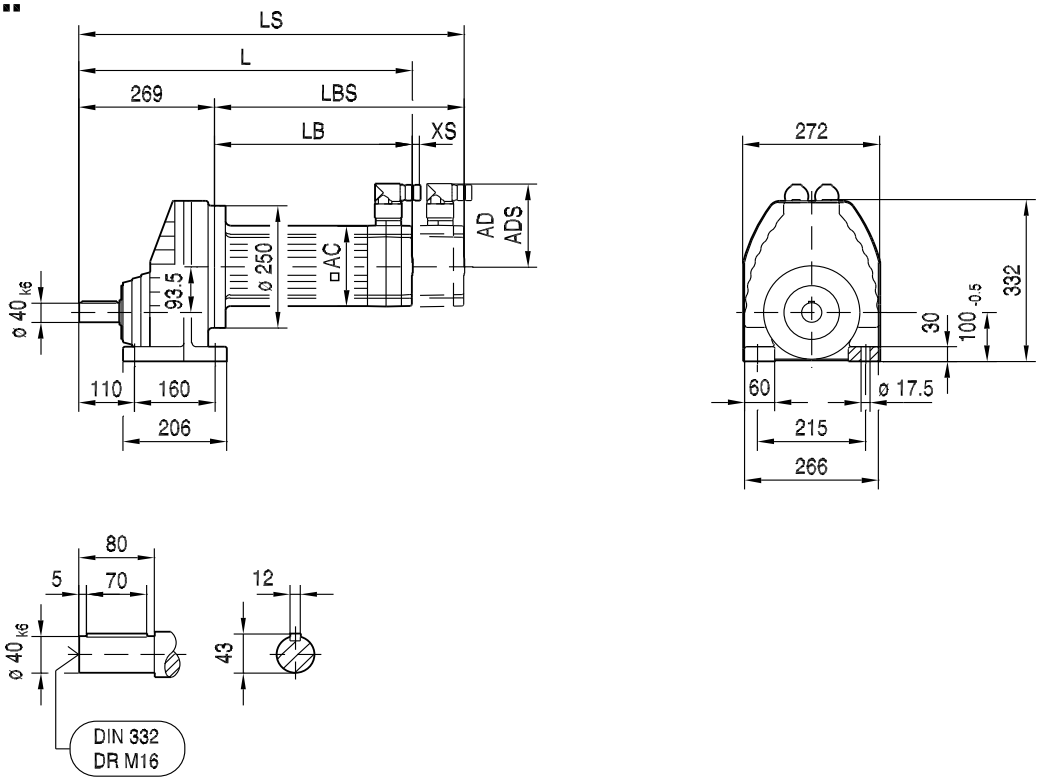

(→ 📖 144)	CMP71S	CMP71M	CMP71L	CMP80S	CMP80M	CMP80L	CMP100S	CMP100M	CMP100L
AC	115	115	115	137	137	137	162	162	162
AD	102	102	102	134	134	134	146	146	146
ADS	104	104	104	137	137	137	147	147	147
L	423	448	498	462	496	564	494	534	614
LS	488	513	563	540	574	642	590	630	710
LB	154	179	229	193	227	295	225	265	345
LBS	219	244	294	271	305	373	321	361	441
XS	11	11	11	37	37	37	37	37	37

01 020 00 07

RXF87..

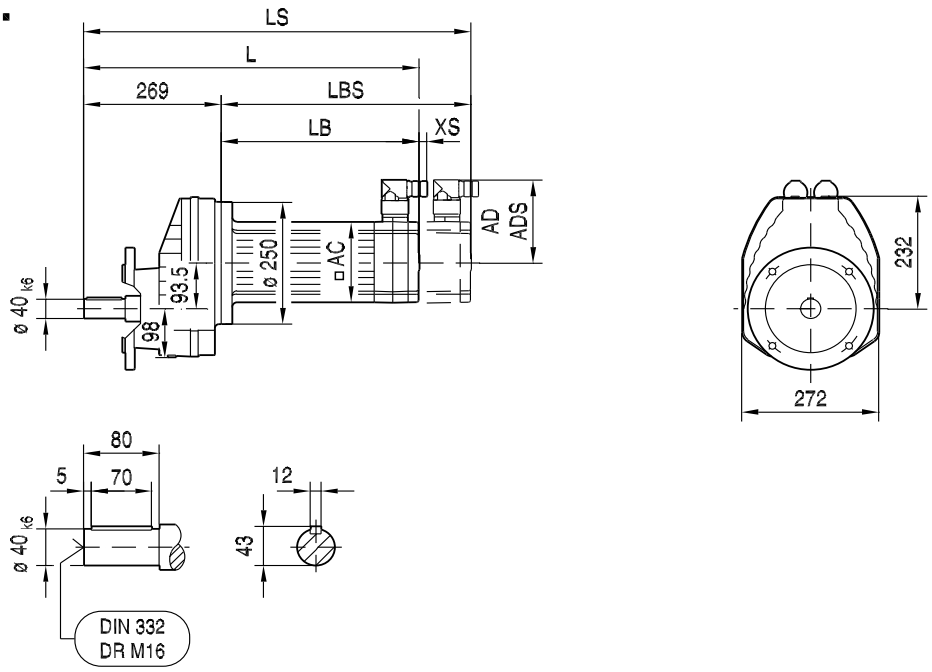

ø 250

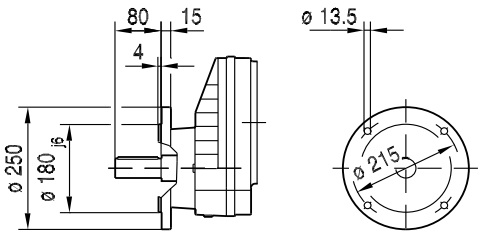

ø 300

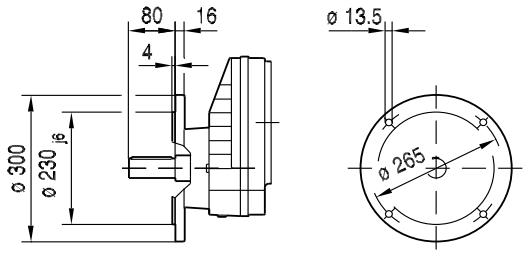

(→ 144)	CMP71S	CMP71M	CMP71L	CMP80S	CMP80M	CMP80L	CMP100S	CMP100M	CMP100L
AC	115	115	115	137	137	137	162	162	162
AD	102	102	102	134	134	134	146	146	146
ADS	104	104	104	137	137	137	147	147	147
L	423	448	498	462	496	564	494	534	614
LS	488	513	563	540	574	642	590	630	710
LB	154	179	229	193	227	295	225	265	345
LBS	219	244	294	271	305	373	321	361	441
XS	11	11	11	37	37	37	37	37	37

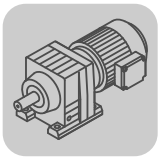

8.2.5 RX 97

M_{aDyn} [Nm]		CMP					
	i	**80S**	**80M**	**80L**	**100S**	**100M**	**100L**
RX97 1	1.42		87	149	95	150	245
	1.64		101	172	110	174	285
	1.96		120	205	131	205	340
	2.24	93	139	235	151	235	395
	2.64	110	164	275	179	280	465
	2.92	122	181	305	197	310	515
	3.30	138	200	345	220	350	580
	3.64	152	225	385	245	385	640
	4.04	168	250	425	270	430	715
	4.52	188	280	475	305	480	>800
	4.91	200	300		325		
	5.79	235	355		385		
	6.56	270					
	7.16	295					
	8.23						

→ 📖 **144**

m [kg]		CMP					
	s	**80S**	**80M**	**80L**	**100S**	**100M**	**100L**
RX97	1	78	80	84	86	90	99
RXF: + 8.6 kg							

CMP..	i	n_{epk} [1/min]	η [%]	c_{TG} RX [Nm/']	c_{TG} RXF [Nm/']
RX97 1	1.42	2187	98	58	58
	1.64	2526	98	58	58
	1.96	3019	98	58	58
	2.24	3450	99	58	58
	2.64	4066	99	58	58
	2.92	4497	99	58	58
	3.30	4500	99	58	58
	3.64	4500	99	58	58
	4.04	4500	99	58	58
	4.52	4500	99	58	58
	4.91	4500	98	58	58
	5.79	4500	98	58	58
	6.56	4500	98	58	58
	7.16	4500	98	58	58
	8.23	4500	98	58	58

8

CMP.. n_e = 1400	i	M_{amax} [Nm]	M_{apk} [Nm]	$M_{aNotaus}$ [Nm]	n_{ak} [1/min]	J_G 10^{-4} [kgm^2]	F_{Ramax} RX [N]	F_{Ramax} RXF [N]	F_{Rapk} RX [N]	F_{Rapk} RXF [N]
RX97 1	1.42	455	682	774	986	61	132	132	20000	20000
	1.64	505	757	859	854	51	51	51	20000	20000
	1.96	570	800	969	714	41	19	19	20000	20000
	2.24	595	800	1012	670	33	495	495	20000	20000
	2.64	595	800	1012	795	28	1980	1980	20000	20000
	2.92	595	800	1012	856	24	2810	2810	20000	20000
	3.30	595	800	1012	909	20	3730	3730	20000	20000
	3.64	595	800	1012	962	18	4530	4530	20000	20000
	4.04	595	800	1012	1015	15	5380	5380	20000	20000
	4.52	595	800	1012	1062	13	6180	6180	20000	20000
	4.91	395	592	672	1426	12	7220	7220	20000	20000
	5.79	420	630	714	1209	9.2	7630	7630	20000	20000
	6.56	300	450	510	1067	5.8	8500	8500	20000	20000
	7.16	260	390	442	978	5.1	8950	8950	20000	20000
	8.23	225	337	383	851	4.0	9560	9560	20000	20000

01 021 00 07

RX97..

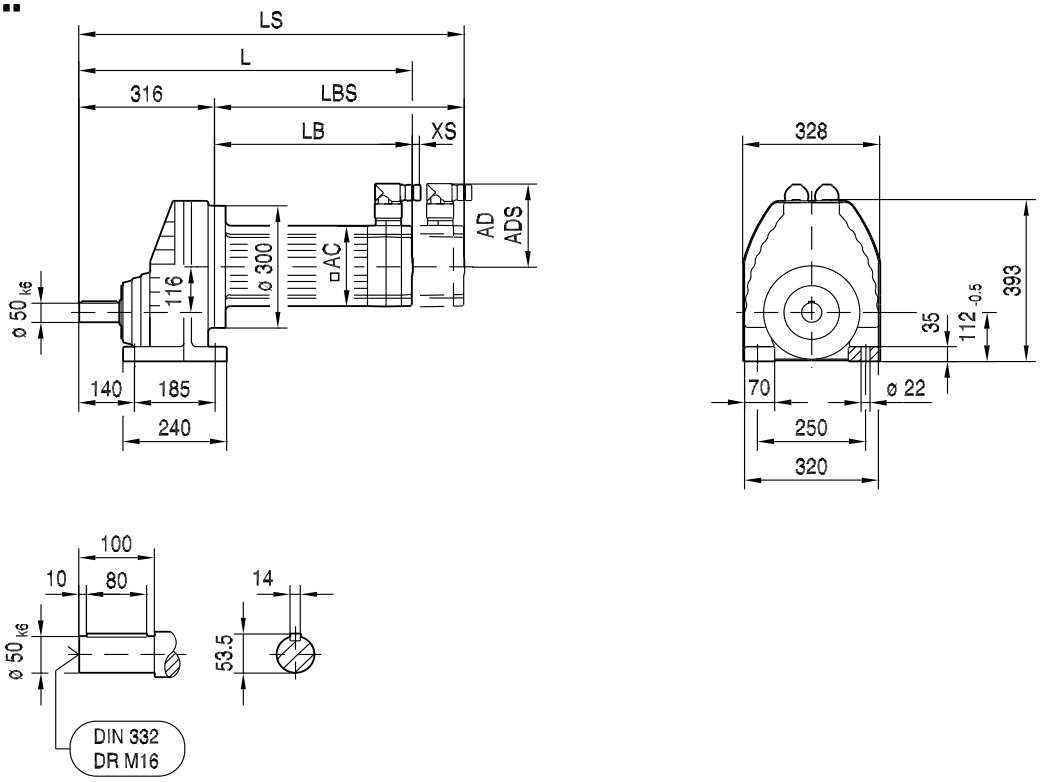

(→ 📖 144)	CMP80S	CMP80M	CMP80L	CMP100S	CMP100M	CMP100L		
AC	137	137	137	162	162	162		
AD	134	134	134	146	146	146		
ADS	137	137	137	147	147	147		
L	503	537	605	536	576	656		
LS	581	615	683	632	672	752		
LB	187	221	289	220	260	340		
LBS	265	299	367	316	356	436		
XS	37	37	37	37	37	37		

01 022 00 07

RXF97..

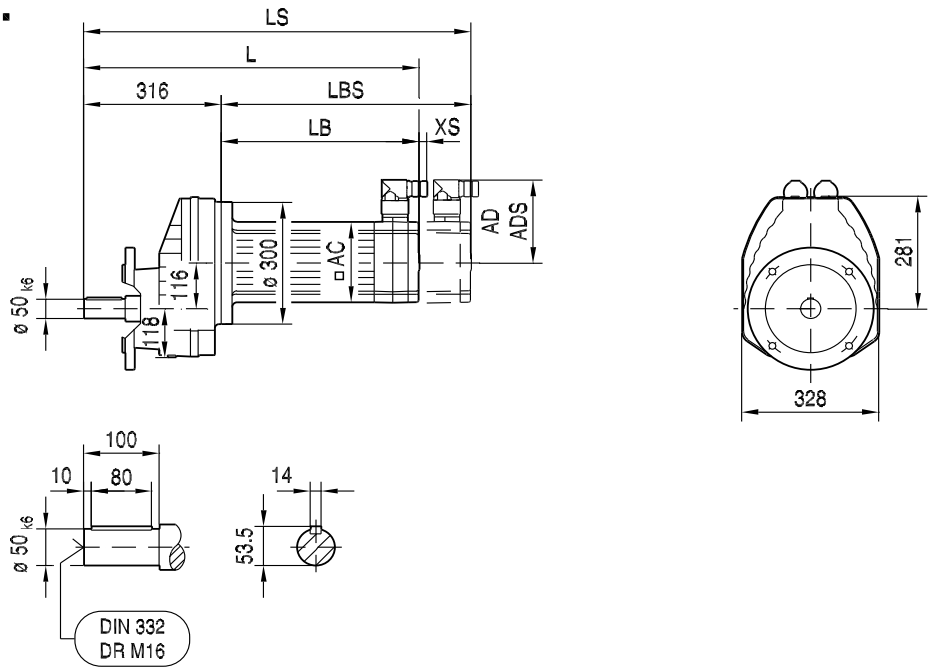

ø 300

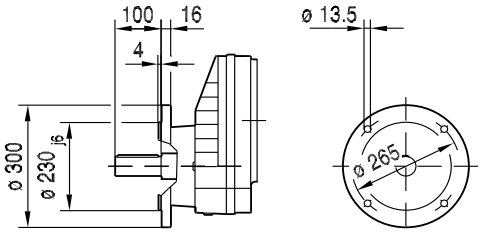

ø 350

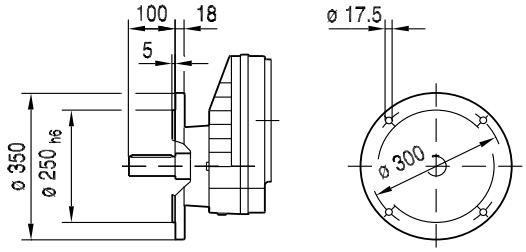

(→ 📖 144)	CMP80S	CMP80M	CMP80L	CMP100S	CMP100M	CMP100L		
AC	137	137	137	162	162	162		
AD	134	134	134	146	146	146		
ADS	137	137	137	147	147	147		
L	503	537	605	536	576	656		
LS	581	615	683	632	672	752		
LB	187	221	289	220	260	340		
LBS	265	299	367	316	356	436		
XS	37	37	37	37	37	37		

8.2.6 RX 107

M_{aDyn} [Nm]		CMP		
	i	100S	100M	100L
RX107 1	1.44		152	250
	1.71	114	181	295
	1.95	131	205	340
	2.30	154	240	400
	2.64	179	280	465
	3.07	205	325	540
	3.38	225	360	595
	3.81	255	405	670
	4.20	280	445	740
	4.65	310	495	820
	5.19	350	550	910
	5.61	375		
	6.63	440		

→ 📖 144

m [kg]		CMP		
	s	100S	100M	100L
RX107	1	120	125	130
RXF: + 16.8 kg				

CMP..		n_{epk}	η	c_{TG}	
	i	[1/min]	[%]	RX [Nm/']	RXF [Nm/']
RX107 1	1.44	2101	98	93	93
	1.71	2495	98	93	93
	1.95	2845	98	93	93
	2.30	3356	98	93	93
	2.64	3852	99	93	93
	3.07	4479	99	93	93
	3.38	4500	99	93	93
	3.81	4500	99	93	93
	4.20	4500	99	93	93
	4.65	4500	99	93	93
	5.19	4500	99	93	93
	5.61	4500	98	93	93
	6.63	4500	98	93	93

CMP..							F_{Ramax}		F_{Rapk}	
n_e = 1400	i	M_{amax} [Nm]	M_{apk} [Nm]	$M_{aNotaus}$ [Nm]	n_{ak} [1/min]	J_G 10^{-4} [kgm^2]	RX [N]	RXF [N]	RX [N]	RXF [N]
RX107 1	1.44	645	967	1097	972	111	315	315	30000	30000
	1.71	705	1057	1199	819	84	480	480	30000	30000
	1.95	765	1090	1301	769	70	555	555	30000	30000
	2.30	830	1110	1411	696	57	900	900	30000	30000
	2.64	830	1120	1411	720	47	2160	2160	30000	30000
	3.07	830	1130	1411	814	39	3600	3600	30000	30000
	3.38	830	1130	1411	858	34	4490	4490	30000	30000
	3.81	830	1140	1411	919	29	5550	5550	30000	30000
	4.20	830	1150	1411	952	25	6420	6420	30000	30000
	4.65	695	1042	1182	1505	19	7450	7450	30000	30000
	5.19	695	1042	1182	1349	17	7850	7850	30000	30000
	5.61	455	682	774	1248	15	9080	9080	30000	30000
	6.63	460	690	782	1056	12	9700	9700	30000	30000

01 023 00 07

RX107..

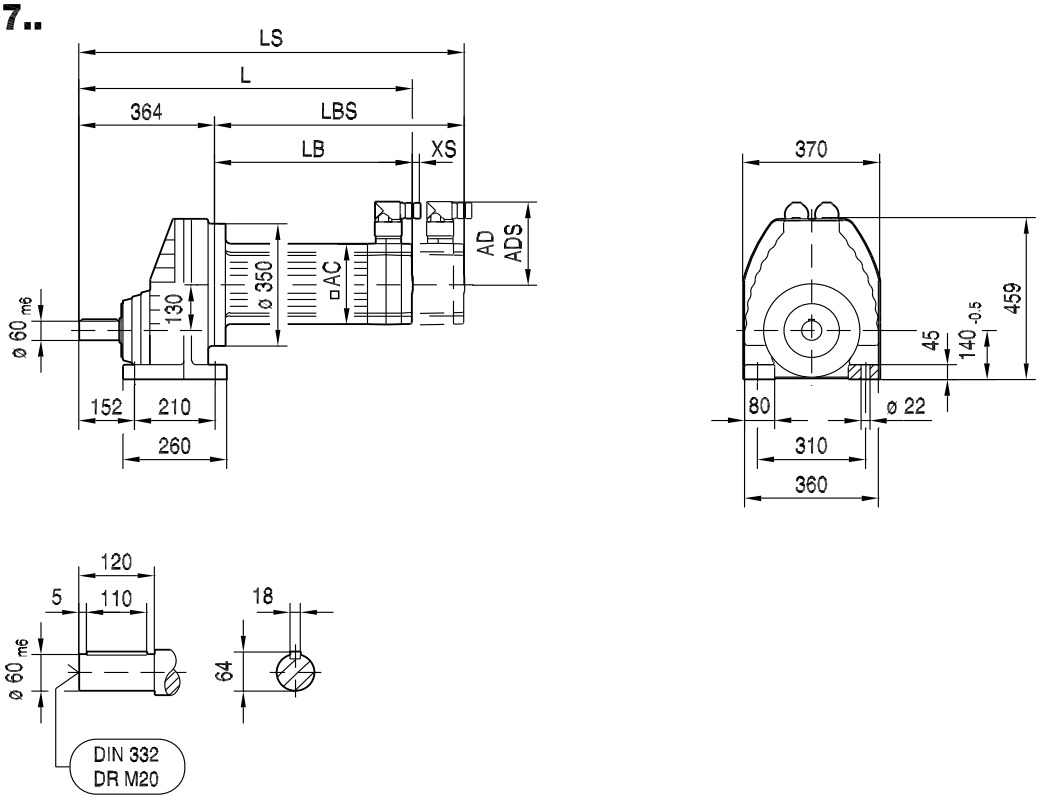

(→ 144)	CMP80L	CMP100S	CMP100M	CMP100L				
AC	0	162	162	162				
AD	0	146	146	146				
ADS	0	147	147	147				
L	364	578	618	698				
LS	364	674	714	794				
LB	0	214	254	334				
LBS	0	310	350	430				
XS	0	37	37	37				

01 024 00 07

RXF107..

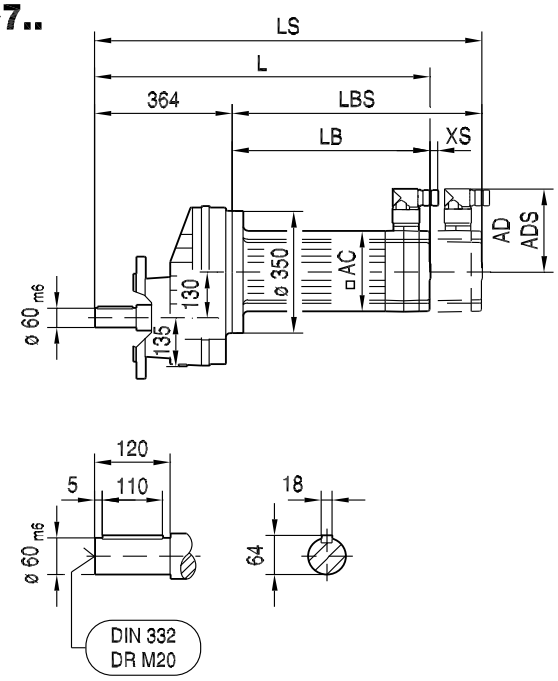

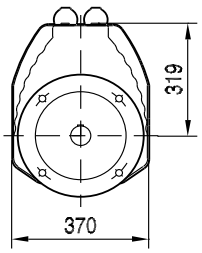

ø 350

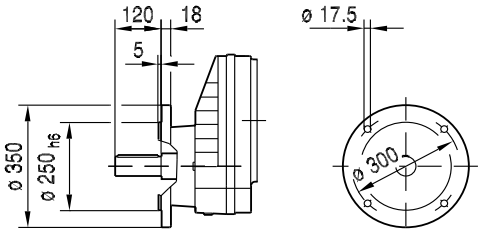

ø 450

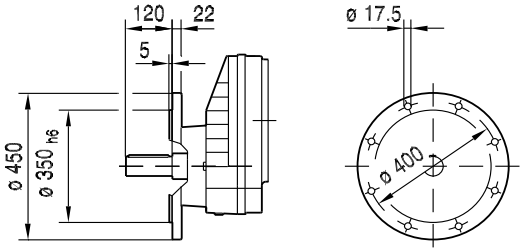

(→ 📖 144)	CMP80L	CMP100S	CMP100M	CMP100L				
AC	0	162	162	162				
AD	0	146	146	146				
ADS	0	147	147	147				
L	364	578	618	698				
LS	364	674	714	794				
LB	0	214	254	334				
LBS	0	310	350	430				
XS	0	37	37	37				

8.3 R..[mm]

8.3.1 R 07

M_{aDyn} [Nm]	i	CMP 40M
R07 2	3.21	12
	3.68	14
	3.95	15
	4.57	17
	4.92	18
	5.76	21
	6.83	25
	7.48	28
	7.85	29
	9.01	33
	9.67	35
	11.18	41
	12.06	44
	14.12	>51
	16.73	>51
	18.31	>51
R07 3	21.73	>51
	23.32	>51
	26.97	>51
	29.08	>51
	34.05	>51
	38.51	>51
	40.34	>51
	41.31	>51
	44.16	>51
	47.78	>51
	51.52	>51
	60.32	>51
	71.47	>51
	78.24	>51

→ 144

m [kg]	s	CMP 40M
R07	2	4.2
R07	3	4.3
RF: + 0.0 kg		

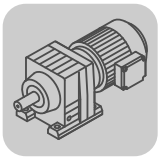

R..CMP
R..[mm]

CMP..	i	n_{epk} [1/min]	η [%]	c_{TG} R [Nm/']	c_{TG} RF [Nm/']
R07 2	3.21	3872	97	2.8	2.7
	3.68	4439	97	2.8	2.7
	3.95	4500	97	2.8	2.7
	4.57	4500	97	2.8	2.7
	4.92	4500	97	2.8	2.7
	5.76	4500	97	2.8	2.7
	6.83	4500	97	2.8	2.7
	7.48	4500	97	2.8	2.7
	7.85	4500	96	3.9	3.7
	9.01	4500	96	3.9	3.7
	9.67	4500	96	3.9	3.7
	11.18	4500	96	3.9	3.7
	12.06	4500	96	3.9	3.7
	14.12	4500	96	3.9	3.7
	16.73	4500	96	3.9	3.7
	18.31	4500	96	3.9	3.7
R07 3	21.73	4500	93	4.1	3.8
	23.32	4500	93	4.1	3.8
	26.97	4500	93	4.1	3.8
	29.08	4500	93	4.1	3.8
	34.05	4500	93	4.1	3.8
	38.51	4500	91	4.1	3.9
	40.34	4500	92	4.1	3.8
	41.31	4500	91	4.1	3.9
	44.16	4500	92	4.1	3.8
	47.78	4500	90	4.1	3.9
	51.52	4500	90	4.1	3.9
	60.32	4500	90	4.1	3.9
	71.47	4500	89	4.1	3.9
	78.24	4500	88	4.1	3.9

CMP..							F_{Ramax}		F_{Rapk}	
n_e = 1400	i	M_{amax} [Nm]	M_{apk} [Nm]	$M_{aNotaus}$ [Nm]	n_{ak} [1/min]	J_G 10^{-4} [kgm^2]	R [N]	RF [N]	R [N]	RF [N]
R07 2	3.21	31	46	53	561	0.24	495	415	1530	1250
	3.68	33	46	56	516	0.19	500	420	1530	1250
	3.95	34	46	58	506	0.17	505	425	1530	1250
	4.57	36	46	61	460	0.13	520	435	1530	1250
	4.92	37	46	63	427	0.12	530	445	1530	1250
	5.76	40	46	68	365	0.090	530	440	1530	1250
	6.83	43	46	73	307	0.070	535	450	1530	1250
	7.48	43	46	73	321	0.060	595	500	1530	1250
	7.85	49	51	83	166	0.20	645	585	1500	1220
	9.01	50	51	85	166	0.16	685	620	1500	1220
	9.67	50	51	85	165	0.14	710	645	1500	1220
	11.18	50	51	85	179	0.11	760	695	1500	1220
	12.06	50	51	85	182	0.10	790	720	1500	1220
	14.12	50	51	85	184	0.080	850	780	1500	1220
	16.73	50	51	85	191	0.060	920	840	1500	1220
	18.31	50	51	85	191	0.050	960	880	1500	1220

CMP..							F_{Ramax}		F_{Rapk}	
n_e = 1400	i	M_{amax} [Nm]	M_{apk} [Nm]	$M_{aNotaus}$ [Nm]	n_{ak} [1/min]	J_G 10^{-4} [kgm^2]	R [N]	RF [N]	R [N]	RF [N]
R07 3	21.73	50	51	85	161	0.16	1040	950	1500	1220
	23.32	50	51	85	163	0.14	1080	980	1500	1220
	26.97	50	51	85	163	0.11	1150	1050	1500	1220
	29.08	50	51	85	162	0.10	1190	1080	1500	1220
	34.05	50	51	85	162	0.080	1270	1160	1500	1220
	38.51	50	51	85	171	0.14	1340	1220	1500	1220
	40.34	50	51	85	164	0.060	1370	1230	1500	1220
	41.31	50	51	85	169	0.13	1380	1230	1500	1220
	44.16	50	51	85	159	0.050	1420	1230	1500	1220
	47.78	50	51	85	147	0.10	1470	1230	1500	1220
	51.52	50	51	85	136	0.090	1510	1230	1500	1220
	60.32	50	51	85	116	0.070	1510	1230	1500	1220
	71.47	50	51	85	98	0.060	1510	1230	1500	1220
	78.24	50	51	85	89	0.050	1510	1230	1500	1220

01 025 00 07

R07..

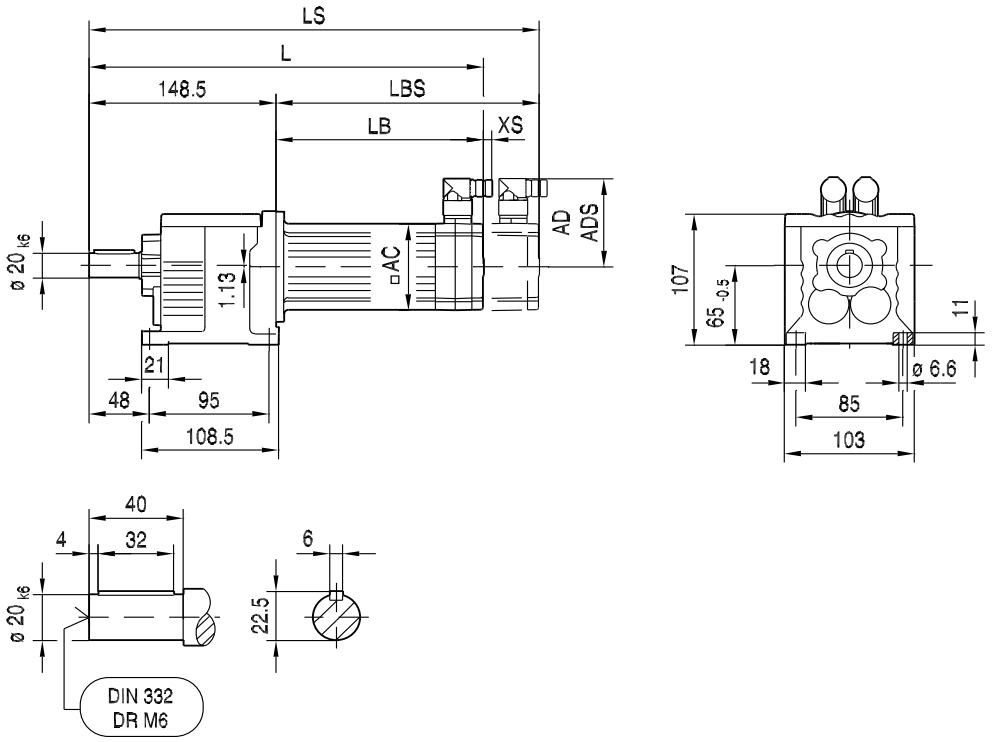

R07F..



(→ 144)	CMP40M							
AC	57							
AD	78							
ADS	78							
L	284							
LS	314							
LB	136							
LBS	166							
XS	19							

01 026 00 07

RF07..

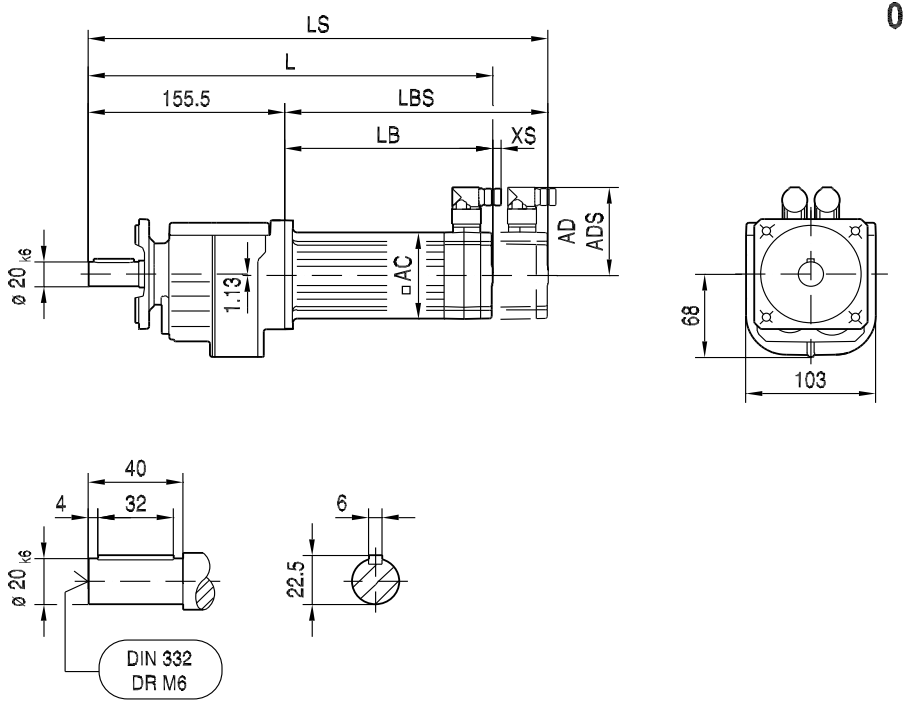

8

ø 120

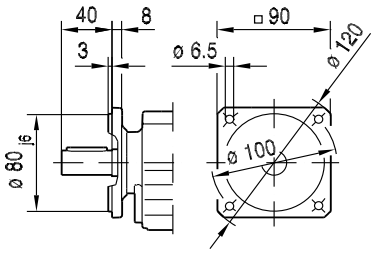

ø 140

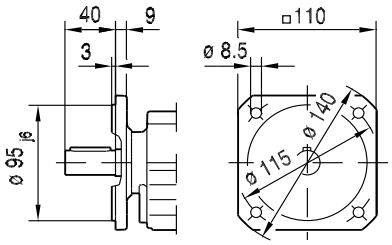

ø 160

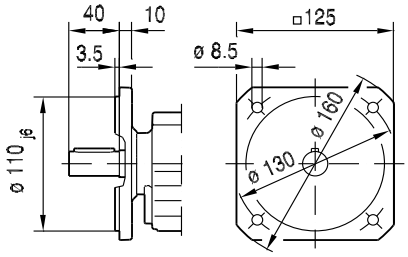

(→ 📖 144)	CMP40M							
AC	57							
AD	78							
ADS	78							
L	291							
LS	321							
LB	136							
LBS	166							
XS	19							

01 027 00 07

RZ07..

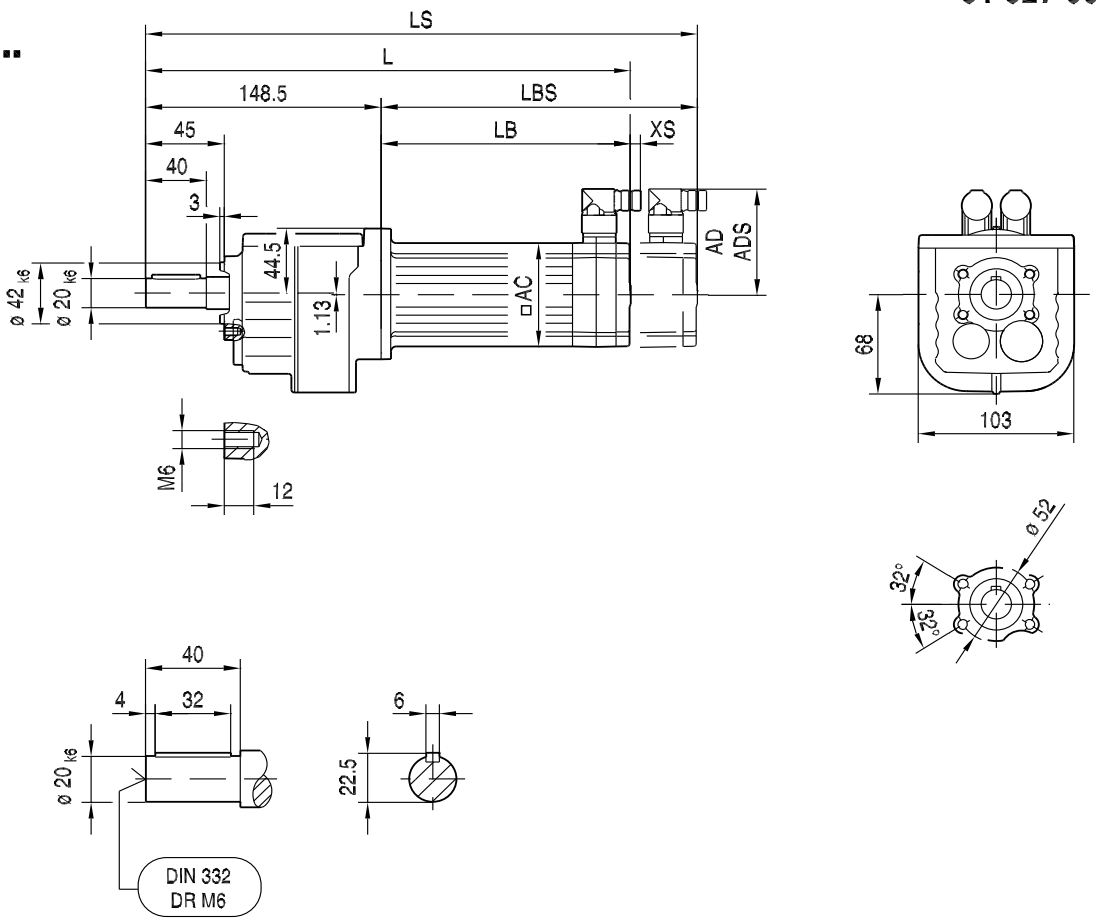

(→ 📖 144)	CMP40M							
AC	57							
AD	78							
ADS	78							
L	284							
LS	314							
LB	136							
LBS	166							
XS	19							

8.3.2 R 17

M_{aDyn} [Nm]	i	CMP 50S
R17 2	3.83	19
	4.51	23
	5.09	26
	5.76	29
	6.15	31
	7.04	36
	7.55	38
	8.63	43
	10.15	51
	11.45	57
	12.98	65
	13.84	69
	15.84	79
	16.99	85
	19.71	>86
	23.15	>86
	25.23	>86
R17 3	24.07	>86
	28.32	>86
	31.94	>86
	36.20	>86
	38.61	>86
	44.18	>86
	47.44	>86
	53.76	>86
	57.35	>86
	65.61	>86
	70.39	>86
	81.64	>86

8

→ 📖 144

m [kg]	s	CMP 50S
R17	2	6.8
R17	3	7.1
RF: + -0.1 kg		

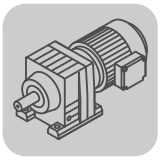

R..CMP
R..[mm]

CMP..	i	n_{epk} [1/min]	η [%]	c_{TG} R [Nm/']	c_{TG} RF [Nm/']
R17 2	3.83	4500	97	3.0	3.0
	4.51	4500	97	3.0	3.0
	5.09	4500	97	3.0	3.0
	5.76	4500	97	3.0	3.0
	6.15	4500	97	3.0	3.0
	7.04	4500	97	3.0	3.0
	7.55	4500	97	3.0	3.0
	8.63	4500	96	4.4	4.3
	10.15	4500	96	4.4	4.3
	11.45	4500	96	4.4	4.3
	12.98	4500	96	4.4	4.3
	13.84	4500	96	4.4	4.3
	15.84	4500	96	4.4	4.3
	16.99	4500	96	4.4	4.3
	19.71	4500	96	4.4	4.3
	23.15	4500	96	4.4	4.3
	25.23	4500	96	4.4	4.3
R17 3	24.07	4500	93	4.6	4.4
	28.32	4500	93	4.6	4.4
	31.94	4500	93	4.6	4.4
	36.20	4500	93	4.6	4.4
	38.61	4500	93	4.6	4.4
	44.18	4500	93	4.6	4.4
	47.44	4500	92	4.6	4.4
	53.76	4500	92	4.6	4.4
	57.35	4500	92	4.6	4.4
	65.61	4500	92	4.6	4.4
	70.39	4500	91	4.6	4.4
	81.64	4500	91	4.6	4.4

CMP..							F_{Ramax}		F_{Rapk}	
n_e = 1400	i	M_{amax} [Nm]	M_{apk} [Nm]	$M_{aNotaus}$ [Nm]	n_{ak} [1/min]	J_G 10^{-4} [kgm^2]	R [N]	RF [N]	R [N]	RF [N]
R17 2	3.83	45	52	77	366	0.46	820	755	2500	2200
	4.51	48	54	82	310	0.35	870	795	2500	2200
	5.09	51	55	87	275	0.29	890	820	2500	2190
	5.76	53	59	90	243	0.24	930	860	2500	2180
	6.15	54	57	92	228	0.22	950	880	2500	2190
	7.04	55	58	94	227	0.18	1010	930	2500	2180
	7.55	56	59	95	225	0.16	1040	950	2500	2180
	8.63	72	86	122	162	0.39	1090	1000	1700	1510
	10.15	77	86	131	138	0.30	1140	1050	1700	1510
	11.45	81	86	138	122	0.26	1180	1080	1700	1510
	12.98	85	86	145	108	0.21	1230	1130	1700	1510
	13.84	85	86	145	108	0.20	1270	1160	1700	1510
	15.84	85	86	145	114	0.16	1350	1240	1700	1510
	16.99	85	86	145	112	0.15	1400	1280	1700	1510
	19.71	85	86	145	117	0.12	1500	1380	1700	1510
	23.15	85	86	145	117	0.090	1620	1480	1700	1510
	25.23	85	86	145	119	0.080	1680	1540	1700	1510

CMP..							F_{Ramax}		F_{Rapk}	
n_e = 1400	i	M_{amax} [Nm]	M_{apk} [Nm]	$M_{aNotaus}$ [Nm]	n_{ak} [1/min]	J_G 10^{-4} [kgm^2]	R [N]	RF [N]	R [N]	RF [N]
R17 3	24.07	85	86	145	104	0.41	1650	1510	1700	1510
	28.32	85	86	145	106	0.32	1770	1560	1700	1510
	31.94	85	86	145	103	0.27	1770	1560	1700	1510
	36.20	85	86	145	105	0.22	1770	1560	1700	1510
	38.61	85	86	145	104	0.20	1770	1560	1700	1510
	44.18	85	86	145	104	0.17	1770	1560	1700	1510
	47.44	85	86	145	110	0.25	1770	1560	1700	1510
	53.76	85	86	145	108	0.21	1770	1560	1700	1510
	57.35	85	86	145	108	0.19	1770	1560	1700	1510
	65.61	85	86	145	107	0.16	1770	1560	1700	1510
	70.39	85	86	145	99	0.14	1770	1560	1700	1510
	81.64	85	86	145	86	0.11	1770	1560	1700	1510

01 028 00 07

R17..

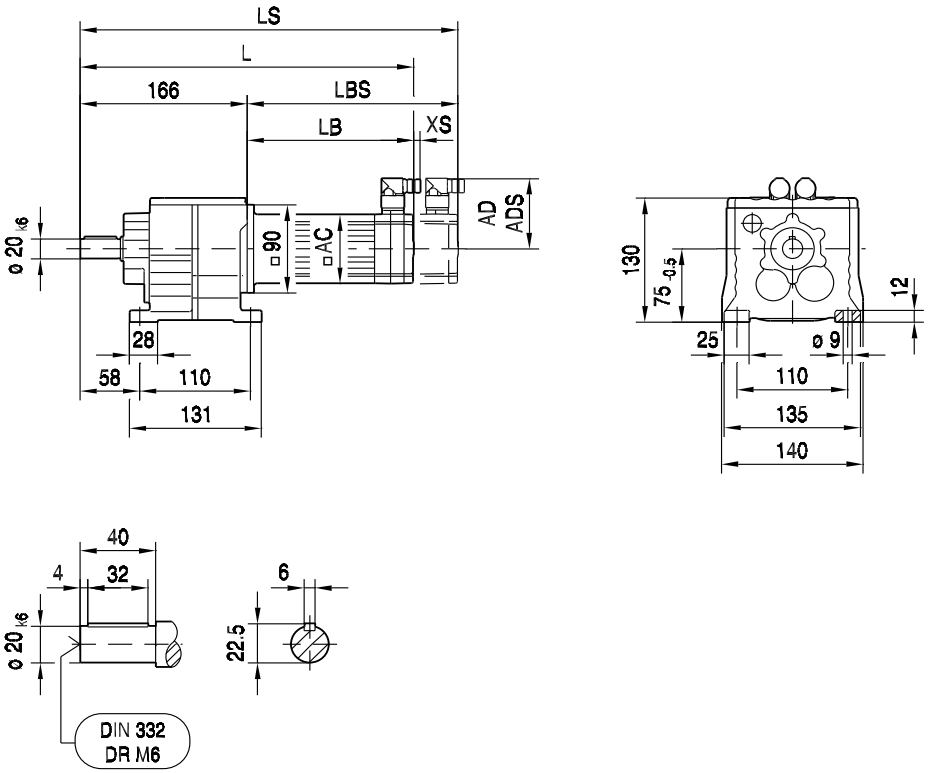

R17F..

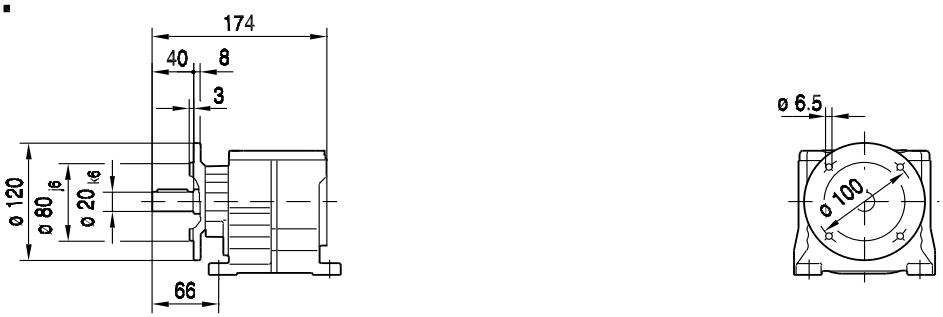

(→ 144)	CMP50S							
AC	73							
AD	86							
ADS	86							
L	312							
LS	341							
LB	146							
LBS	175							
XS	18							

01 029 00 07

RF17..

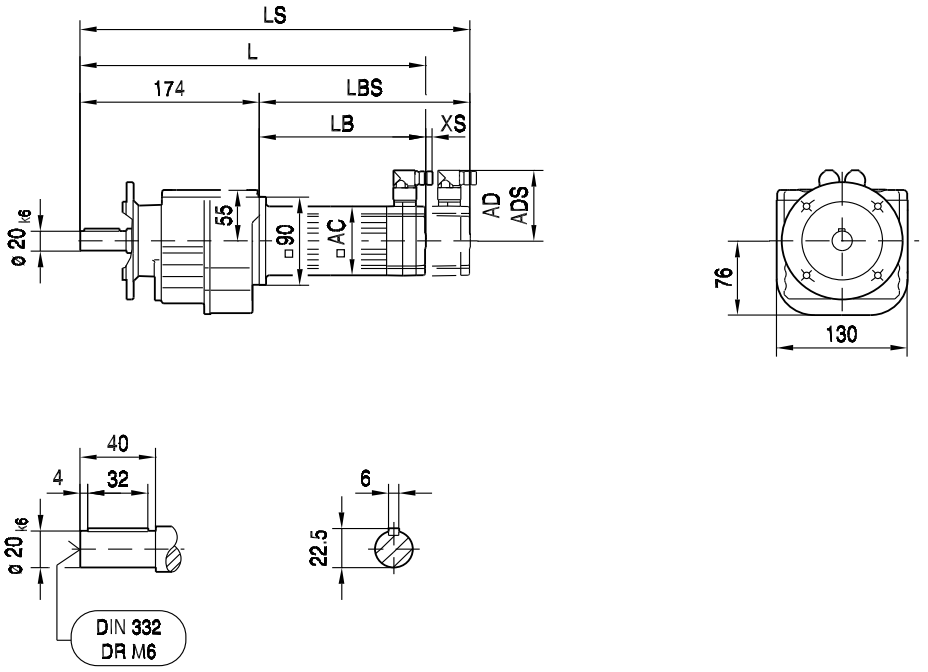

ø 120

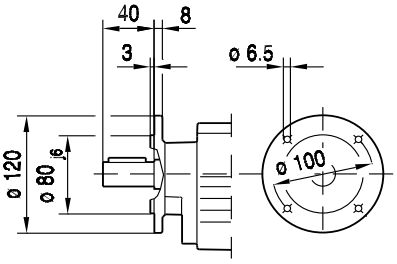

ø 140

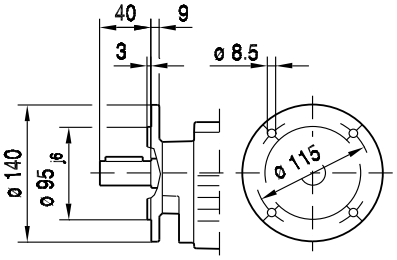

ø 160

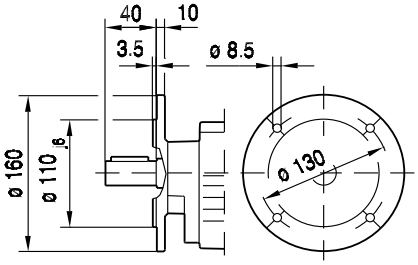

(→ 📖 144)	CMP50S							
AC	73							
AD	86							
ADS	86							
L	320							
LS	349							
LB	146							
LBS	175							
XS	18							

01 030 00 07

RZ17..

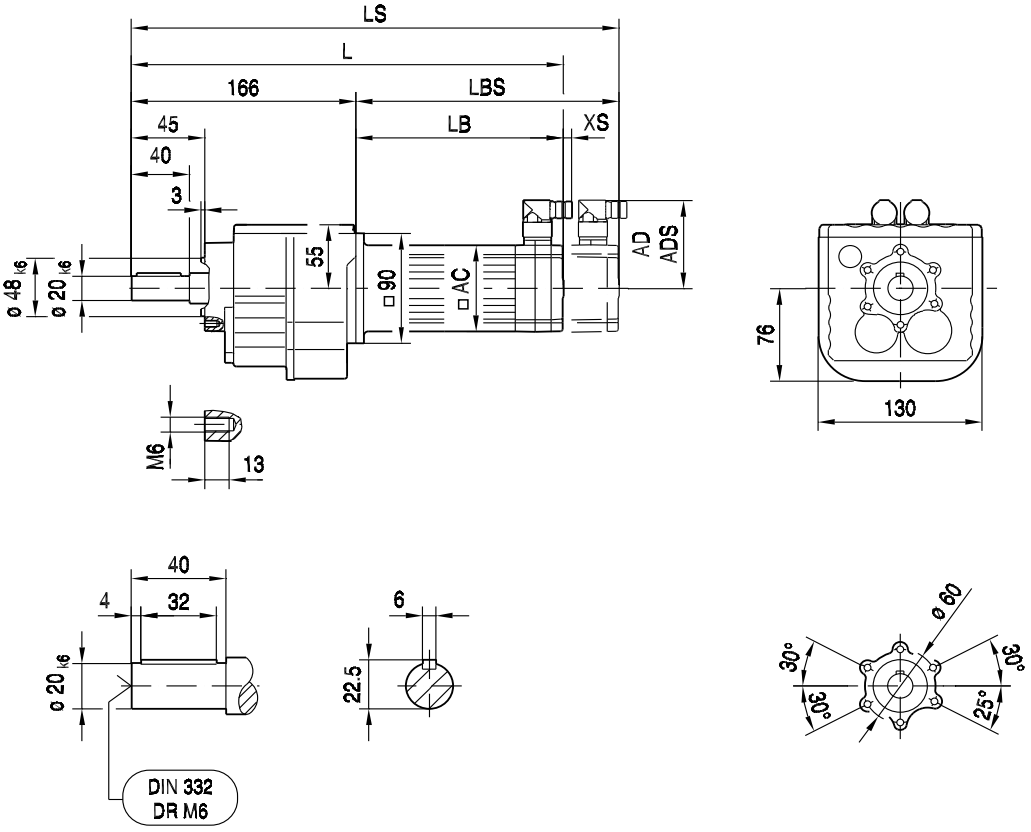

(→ 144)	CMP50S							
AC	73							
AD	86							
ADS	86							
L	312							
LS	341							
LB	146							
LBS	175							
XS	18							

8.3.3 R 27

M_{aDyn} [Nm]		CMP										
	i	40M	50S	50M	50L	63S	63M	63L	71S	71M	71L	80S
R27 2	3.37	12	17	34	50	36	70	99	63	101	>118	>118
	4.00	15	20	40	60	43	83	118	74	120	>127	>127
	4.27	16	22	43	64	46	89	126	80	128	>130	>130
	5.00	18	25	50	75	54	104	>142	93	>142	>142	>142
	5.60	21	28	56	84	60	116	>144	104	>144	>144	>144
	6.59	24	33	66	98	71	137	>145	123	>145		
	7.63	28	38	76	114	82	>148		142			
	8.16	30	41	82	122	88	>148		>148			
	9.41	35	47	94		101						
	10.13	37	51	101	>136	109	>136	>136	>136	>136	>136	>136
	11.86	44	60	118	>136	128	>136	>136	>136	>136	>136	>136
	13.28	49	67	133	>136	>136	>136	>136	>136	>136	>136	>136
	15.63	58	79	>136	>136	>136	>136	>136	>136	>136		
	18.08	67	91	>136	>136	>136	>136		>136			
	19.35	71	98	>136	>136	>136	>136		>136			
	22.32	82	113	>136		>136						
	26.09	95	130									
	28.37	103	>136									
R27 3	24.47	87	120	>136	>136	>136	>136	>136	>136	>136	>136	>136
	28.78	103	>136	>136	>136	>136	>136	>136	>136	>136	>136	>136
	32.47	116	>136	>136	>136	>136	>136	>136	>136	>136	>136	>136
	36.79	131	>136	>136	>136	>136	>136		>136			
	39.25	>136	>136	>136	>136	>136	>136	>136	>136	>136		
	44.90	>136	>136	>136	>136	>136	>136		>136			
	48.17	>136	>136	>136	>136	>136	>136		>136			
	55.87	>136	>136	>136		>136						
	61.30	>136	>136	>136	>136	>136	>136	>136	>136	>136	>136	>136
	69.47	>136	>136	>136	>136	>136	>136		>136			
	74.11	>136	>136	>136	>136	>136	>136	>136	>136	>136		
	84.78	>136	>136	>136	>136	>136	>136		>136			
	90.96	>136	>136	>136	>136	>136	>136		>136			
	105.49	>136	>136	>136		>136						
	123.91	>136	>136									
	135.09	>136	>136									

→ 144

m [kg]		CMP										
	s	40M	50S	50M	50L	63S	63M	63L	71S	71M	71L	80S
R27	2	5.5	7.2	8.1	9.0	9.2	11	12	12	14	16	20
R27	3	5.7	7.4	8.3	9.2	9.5	11	12	12	14	16	20
RF: + -0.1 kg												

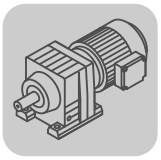

R..CMP
R..[mm]

CMP..	i	n_{epk} [1/min]	η [%]	c_{TG} R [Nm/']	c_{TG} RF [Nm/']
R27 2	3.37	4500	97	7.2	7.1
	4.00	4500	97	7.2	7.1
	4.27	4500	97	7.2	7.1
	5.00	4500	97	7.2	7.1
	5.60	4500	97	7.2	7.1
	6.59	4500	97	7.2	7.1
	7.63	4500	97	7.2	7.1
	8.16	4500	97	7.2	7.1
	9.41	4500	97	7.2	7.1
	10.13	4500	97	9.0	8.8
	11.86	4500	97	9.0	8.8
	13.28	4500	97	9.0	8.8
	15.63	4500	97	9.0	8.8
	18.08	4500	97	9.0	8.8
	19.35	4500	97	9.0	8.8
	22.32	4500	97	9.0	8.8
	26.09	4500	96	9.0	8.8
	28.37	4500	96	9.0	8.8
R27 3	24.47	4500	94	9.0	8.8
	28.78	4500	94	9.0	8.8
	32.47	4500	94	9.0	8.8
	36.79	4500	94	9.0	8.8
	39.25	4500	94	9.0	8.8
	44.90	4500	94	9.0	8.8
	48.17	4500	94	9.0	8.8
	55.87	4500	94	9.0	8.8
	61.30	4500	92	9.1	8.8
	69.47	4500	92	9.1	8.8
	74.11	4500	92	9.1	8.8
	84.78	4500	92	9.1	8.8
	90.96	4500	92	9.1	8.8
	105.49	4500	92	9.1	8.8
	123.91	4500	91	9.1	8.8
	135.09	4500	91	9.1	8.8

CMP..							F_{Ramax}		F_{Rapk}	
n_e = 1400	i	M_{amax} [Nm]	M_{apk} [Nm]	$M_{aNotaus}$ [Nm]	n_{ak} [1/min]	J_G 10^{-4} [kgm^2]	R [N]	RF [N]	R [N]	RF [N]
R27 2	3.37	79	118	134	415	1.1	900	790	4290	3690
	4.00	85	127	145	350	0.85	900	800	4250	3660
	4.27	87	130	148	328	0.76	920	810	4230	3640
	5.00	95	142	162	280	0.58	860	760	4180	3590
	5.60	99	144	168	250	0.48	880	775	4170	3580
	6.59	106	145	180	212	0.36	880	775	4160	3580
	7.63	112	148	190	183	0.29	900	795	4150	3570
	8.16	116	148	197	172	0.26	870	770	4150	3570
	9.41	122	149	207	149	0.21	900	795	4140	3560
	10.13	122	136	207	138	0.61	1890	1670	4210	3620
	11.86	129	136	219	118	0.47	1980	1750	4210	3620
	13.28	130	136	221	120	0.39	2140	1910	4210	3620
	15.63	130	136	221	122	0.29	2290	2170	4210	3620
	18.08	130	136	221	122	0.24	2440	2310	4210	3620
	19.35	130	136	221	124	0.22	2510	2380	4210	3620
	22.32	130	136	221	125	0.18	2660	2520	4210	3620
	26.09	130	136	221	126	0.14	2840	2690	4210	3620
	28.37	130	136	221	130	0.12	2940	2780	4210	3620

CMP..							F_{Ramax}		F_{Rapk}	
n_e = 1400	i	M_{amax} [Nm]	M_{apk} [Nm]	$M_{aNotaus}$ [Nm]	n_{ak} [1/min]	J_G 10^{-4} [kgm^2]	R [N]	RF [N]	R [N]	RF [N]
R27 3	24.47	130	136	221	98	0.49	2760	2620	4210	3620
	28.78	130	136	221	97	0.37	2950	2800	4210	3620
	32.47	130	136	221	99	0.31	3100	2940	4210	3620
	36.79	130	136	221	98	0.25	3260	3090	4210	3620
	39.25	130	136	221	97	0.22	3350	3170	4210	3620
	44.90	130	136	221	98	0.18	3530	3340	4210	3620
	48.17	130	136	221	98	0.16	3630	3430	4210	3620
	55.87	130	136	221	98	0.13	3840	3640	4210	3620
	61.30	130	136	221	106	0.26	3980	3640	4210	3620
	69.47	130	136	221	101	0.22	4180	3640	4210	3620
	74.11	130	136	221	94	0.20	4230	3640	4210	3620
	84.78	130	136	221	83	0.16	4230	3640	4210	3620
	90.96	130	136	221	77	0.15	4230	3640	4210	3620
	105.49	130	136	221	66	0.12	4230	3640	4210	3620
	123.91	130	136	221	56	0.090	4230	3640	4210	3620
	135.09	130	136	221	52	0.080	4230	3640	4210	3620

01 031 00 07

R27..

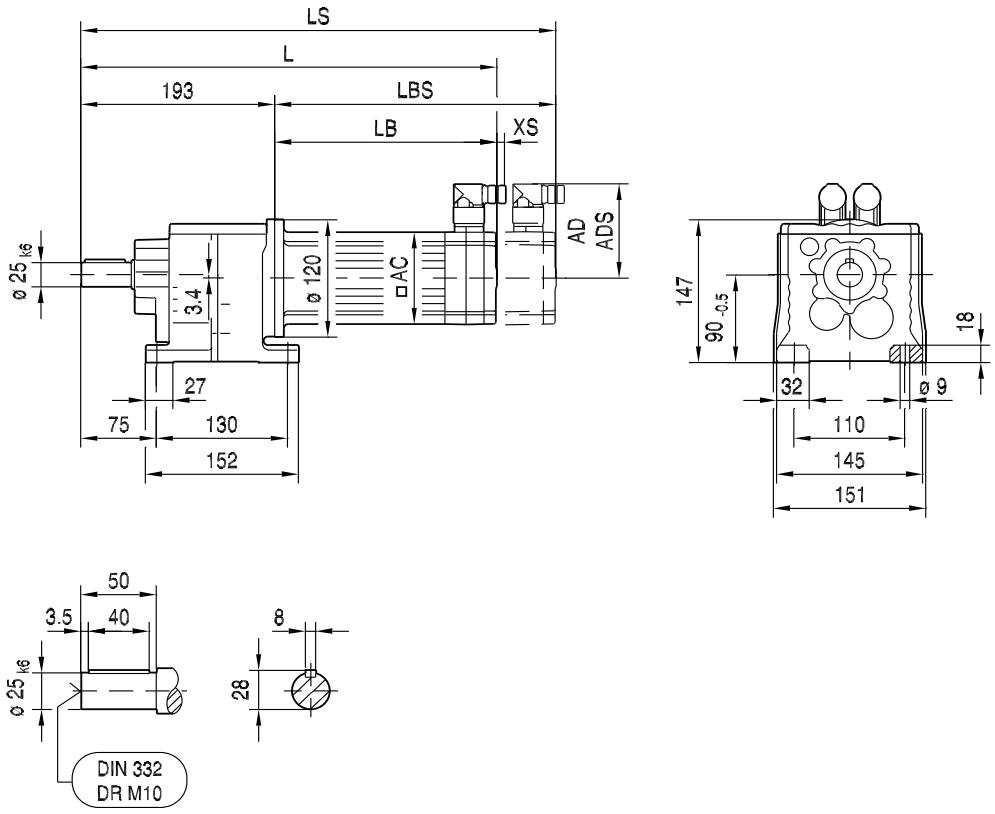

R27F..

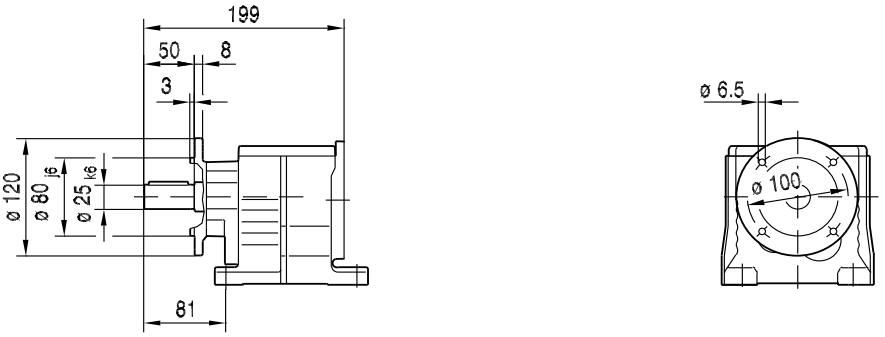

(→ 144)	CMP40M	CMP50S	CMP50M	CMP50L	CMP63S	CMP63M	CMP63L	CMP71S	CMP71M	CMP71L	CMP80S
AC	57	73	73	73	88	88	88	115	115	115	137
AD	78	86	86	86	92	92	92	102	102	102	134
ADS	78	86	86	86	92	92	92	104	104	104	137
L	336	338	377	416	373	423	476	365	393	440	405
LS	366	367	406	445	401	451	505	430	458	505	483
LB	143	145	184	223	180	230	283	172	200	247	212
LBS	173	174	213	252	208	258	312	237	265	312	290
XS	19	18	18	18	14	14	14	11	11	11	37

01 032 00 07

RF27..

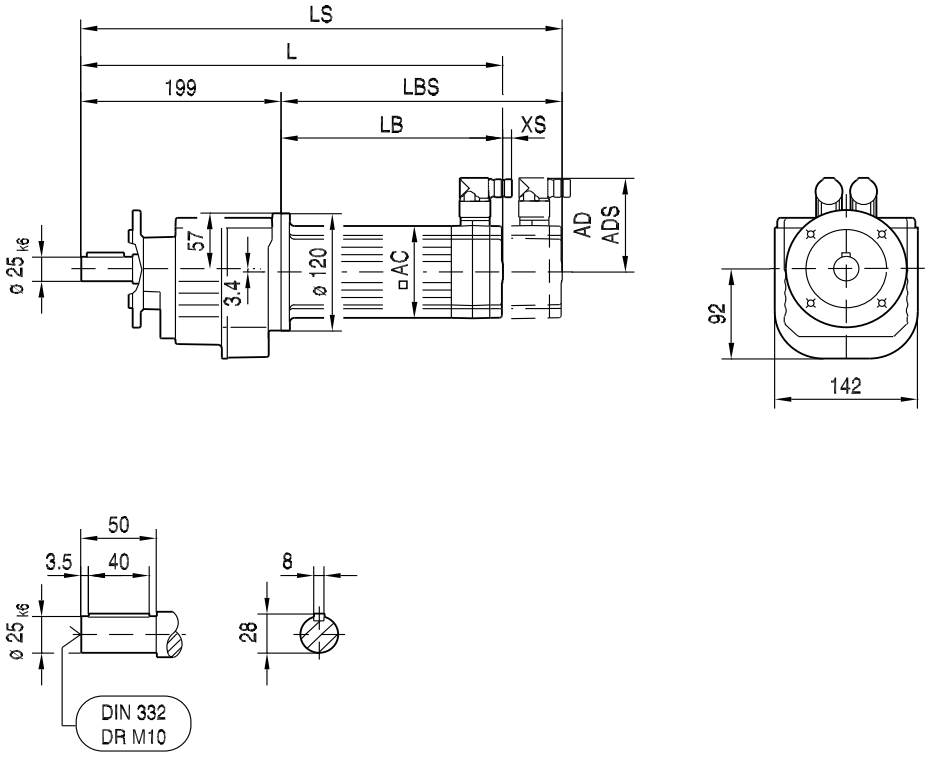

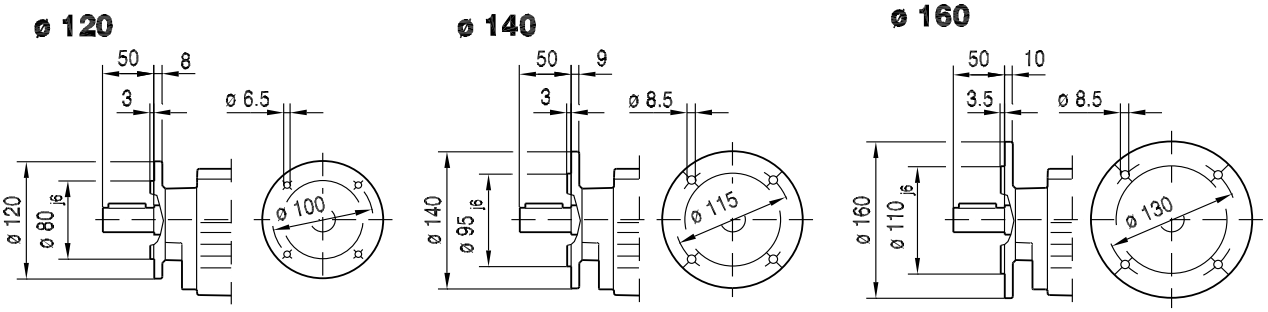

(→ 144)	CMP40M	CMP50S	CMP50M	CMP50L	CMP63S	CMP63M	CMP63L	CMP71S	CMP71M	CMP71L	CMP80S
AC	57	73	73	73	88	88	88	115	115	115	137
AD	78	86	86	86	92	92	92	102	102	102	134
ADS	78	86	86	86	92	92	92	104	104	104	137
L	342	344	383	422	379	429	482	371	399	446	411
LS	372	373	412	451	407	457	511	436	464	511	489
LB	143	145	184	223	180	230	283	172	200	247	212
LBS	173	174	213	252	208	258	312	237	265	312	290
XS	19	18	18	18	14	14	14	11	11	11	37

01 033 00 07

RZ27..

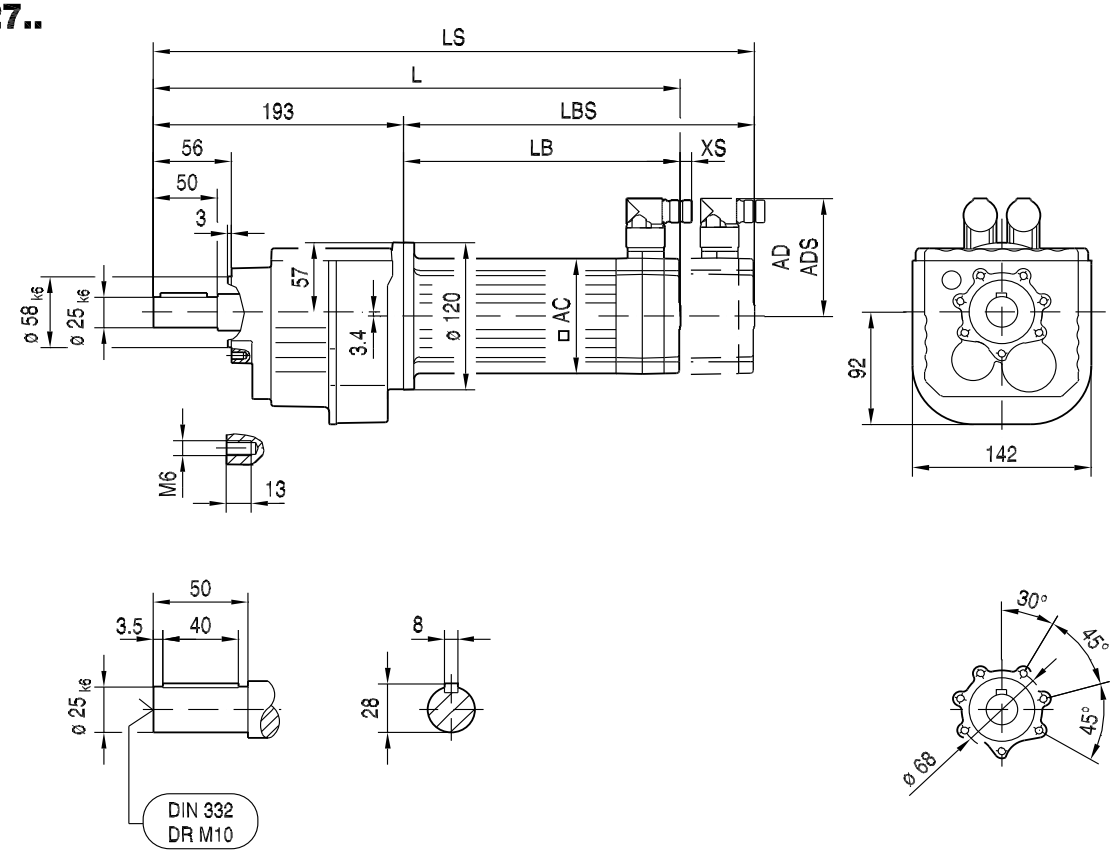

(→ 📖 144)	CMP40M	CMP50S	CMP50M	CMP50L	CMP63S	CMP63M	CMP63L	CMP71S	CMP71M	CMP71L	CMP80S
AC	57	73	73	73	88	88	88	115	115	115	137
AD	78	86	86	86	92	92	92	102	102	102	134
ADS	78	86	86	86	92	92	92	104	104	104	137
L	336	338	377	416	373	423	476	365	393	440	405
LS	366	367	406	445	401	451	505	430	458	505	483
LB	143	145	184	223	180	230	283	172	200	247	212
LBS	173	174	213	252	208	258	312	237	265	312	290
XS	19	18	18	18	14	14	14	11	11	11	37

8.3.4 R 37

M_{aDyn} [Nm]		CMP										
	i	40M	50S	50M	50L	63S	63M	63L	71S	71M	71L	80S
R37 2	3.41	13	17	34	51	37	71	101	64	102	>147	139
	4.05	15	20	40	60	44	84	119	75	121	>153	>153
	4.32	16	22	43	65	47	90	127	80	129	>155	>155
	5.06	19	26	51	76	54	105	149	94	151	>156	>156
	5.67	21	29	57	85	61	118	>156	106	>156	>156	>156
	6.67	25	34	67	100	72	138	>166	124	>166		
	7.97	29	40	80	119	86	165	>205	148	>205	>205	>205
	9.47	35	48	95	141	102	197	>205	176	>205	>205	>205
	10.11	37	51	101	151	109	>205	>205	188	>205	>205	>205
	11.83	44	60	118	177	127	>205	>205	>205	>205	>205	>205
	13.25	49	67	132	198	143	>205	>205	>205	>205	>205	>205
	15.60	58	79	156	>205	168	>205	>205	>205	>205		
	18.05	67	91	180	>205	194	>205		>205			
	19.31	71	97	193	>205	>205	>205		>205			
	22.27	82	112	>205		>205						
	26.03	96	131									
	28.32	104	143									
R37 3	24.42	88	121	>205	>205	>205	>205	>205	>205	>205	>205	>205
	28.73	104	142	>205	>205	>205	>205	>205	>205	>205	>205	>205
	32.40	117	160	>205	>205	>205	>205	>205	>205	>205	>205	>205
	36.72	133	181	>205	>205	>205	>205		>205			
	39.17	141	193	>205	>205	>205	>205	>205	>205	>205		
	44.81	162	>205	>205	>205	>205	>205		>205			
	48.08	174	>205	>205	>205	>205	>205		>205			
	55.76	200	>205	>205		>205						
	61.18	>205	>205	>205	>205	>205	>205	>205	>205	>205	>205	>205
	69.33	>205	>205	>205	>205	>205	>205		>205			
	73.96	>205	>205	>205	>205	>205	>205	>205	>205	>205		
	84.61	>205	>205	>205	>205	>205	>205		>205			
	90.77	>205	>205	>205	>205	>205	>205		>205			
	105.28	>205	>205	>205		>205						
	123.66	>205	>205									
	134.82	>205	>205									

→ 144

m [kg]		CMP										
	s	40M	50S	50M	50L	63S	63M	63L	71S	71M	71L	80S
R37	2	11	13	14	15	15	17	18	18	19	22	26
R37	3	12	13	14	15	15	17	18	18	20	22	26
RF: + 1.5 kg												

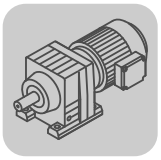

R..CMP
R..[mm]

CMP..	i	n_{epk} [1/min]	η [%]	c_{TG} R [Nm/']	c_{TG} RF [Nm/']	φ /R [']
R37 2	3.41	3587	97	9.7	9.5	14
	4.05	4261	97	9.7	9.5	13
	4.32	4500	97	9.7	9.5	13
	5.06	4500	97	9.7	9.5	13
	5.67	4500	97	9.7	9.5	12
	6.67	4500	97	9.7	9.5	12
	7.97	4500	97	13	12	8
	9.47	4500	97	13	12	8
	10.11	4500	97	13	12	8
	11.83	4500	97	13	12	8
	13.25	4500	97	13	12	8
	15.60	4500	97	13	12	8
	18.05	4500	97	13	12	8
	19.31	4500	97	13	12	7
	22.27	4500	97	13	12	7
	26.03	4500	97	13	12	7
	28.32	4500	97	13	12	7
R37 3	24.42	4500	95	13	12	9
	28.73	4500	95	13	12	9
	32.40	4500	95	13	12	9
	36.72	4500	95	13	12	9
	39.17	4500	95	13	12	9
	44.81	4500	95	13	12	9
	48.08	4500	95	13	12	9
	55.76	4500	95	13	12	9
	61.18	4500	94	13	13	8
	69.33	4500	94	13	13	8
	73.96	4500	94	13	13	8
	84.61	4500	93	13	13	8
	90.77	4500	93	13	13	8
	105.28	4500	93	13	13	8
	123.66	4500	93	13	13	8
	134.82	4500	93	13	13	8

CMP..							F_{Ramax}		F_{Rapk}	
n_e = 1400	i	M_{amax} [Nm]	M_{apk} [Nm]	$M_{aNotaus}$ [Nm]	n_{ak} [1/min]	J_G 10^{-4} [kgm^2]	R [N]	RF [N]	R [N]	RF [N]
R37 2	3.41	112	147	190	411	1.4	900	800	5500	5500
	4.05	122	153	207	346	1.1	840	750	5440	5440
	4.32	126	155	214	324	0.95	820	725	5430	5430
	5.06	135	156	230	277	0.72	790	700	5420	5420
	5.67	142	156	241	247	0.59	760	675	5420	5420
	6.67	144	166	245	210	0.43	1000	890	5320	5320
	7.97	156	205	265	176	0.96	1720	1520	4880	4880
	9.47	167	205	284	148	0.74	1760	1560	4880	4880
	10.11	170	205	289	138	0.66	1820	1620	4880	4880
	11.83	183	205	311	118	0.51	1810	1610	4880	4880
	13.25	190	205	323	106	0.43	1880	1670	4880	4880
	15.60	200	205	340	90	0.31	2010	1780	4880	4880
	18.05	200	205	340	94	0.26	2390	2120	4880	4880
	19.31	200	205	340	93	0.23	2570	2280	4880	4880
	22.27	200	205	340	99	0.19	2970	2640	4880	4880
	26.03	185	205	315	127	0.15	3860	3420	4880	4880
	28.32	200	205	340	99	0.13	3690	3270	4880	4880

CMP..							F_{Ramax}		F_{Rapk}	
n_e = 1400	i	M_{amax} [Nm]	M_{apk} [Nm]	$M_{aNotaus}$ [Nm]	n_{ak} [1/min]	J_G 10^{-4} [kgm^2]	R [N]	RF [N]	R [N]	RF [N]
R37 3	24.42	200	205	340	70	0.53	3240	2870	4880	4880
	28.73	200	205	340	70	0.39	3740	3310	4880	4880
	32.40	200	205	340	71	0.31	4120	3650	4880	4880
	36.72	200	205	340	71	0.25	4540	4020	4880	4880
	39.17	200	205	340	71	0.23	4760	4220	4880	4880
	44.81	200	205	340	71	0.19	4940	4640	4880	4880
	48.08	200	205	340	73	0.17	4940	4870	4880	4880
	55.76	200	205	340	74	0.13	4940	4940	4880	4880
	61.18	200	205	340	75	0.26	4940	4940	4880	4880
	69.33	200	205	340	75	0.22	4940	4940	4880	4880
	73.96	200	205	340	76	0.20	4940	4940	4880	4880
	84.61	200	205	340	76	0.16	4940	4940	4880	4880
	90.77	200	205	340	76	0.15	4940	4940	4880	4880
	105.28	200	205	340	66	0.12	4940	4940	4880	4880
	123.66	200	205	340	57	0.090	4940	4940	4880	4880
	134.82	200	205	340	52	0.080	4940	4940	4880	4880

01 034 00 07

R37..

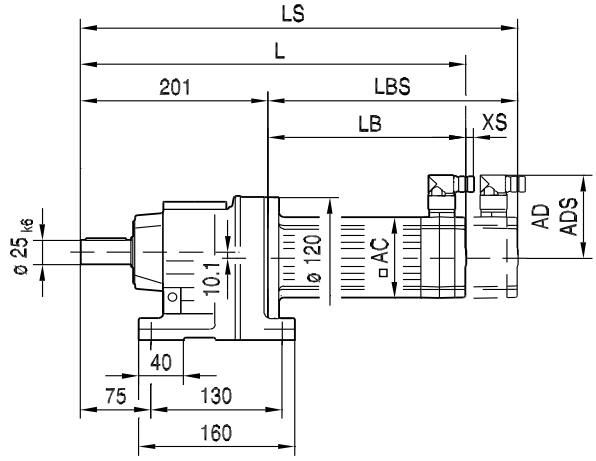

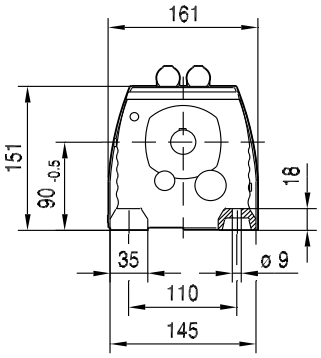

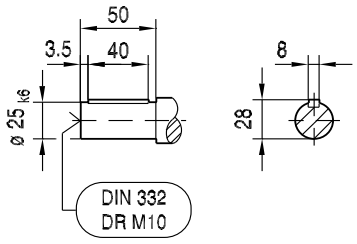

R37F..

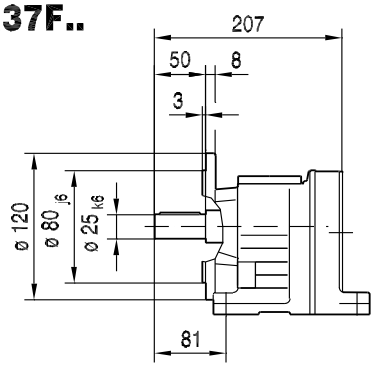

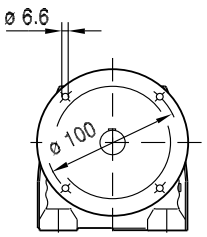

(→ 📖 144)	CMP40M	CMP50S	CMP50M	CMP50L	CMP63S	CMP63M	CMP63L	CMP71S	CMP71M	CMP71L	CMP80S
AC	57	73	73	73	88	88	88	115	115	115	137
AD	78	86	86	86	92	92	92	102	102	102	134
ADS	78	86	86	86	92	92	92	104	104	104	137
L	344	346	385	424	381	431	484	373	401	448	413
LS	374	375	414	453	409	459	513	438	466	513	491
LB	143	145	184	223	180	230	283	172	200	247	212
LBS	173	174	213	252	208	258	312	237	265	312	290
XS	19	18	18	18	14	14	14	11	11	11	37

01 035 00 07

RF37..

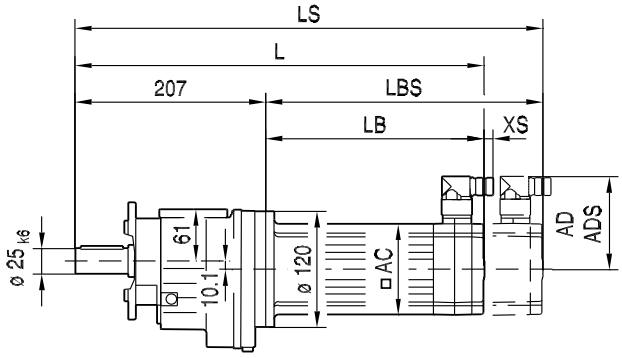

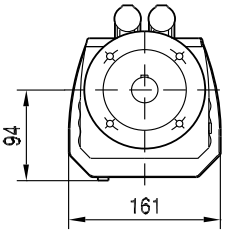

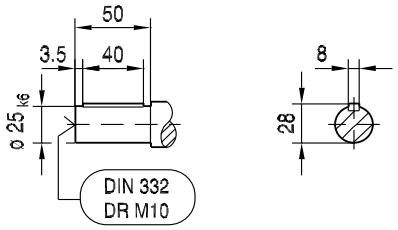

8

ø 120

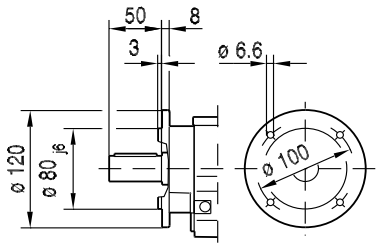

ø 160

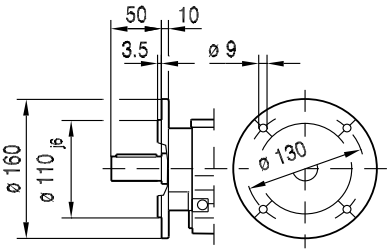

ø 200

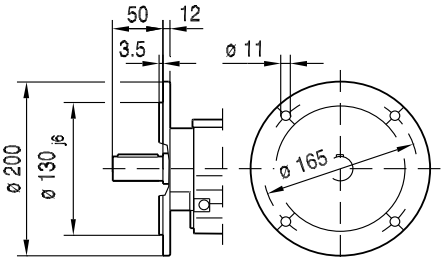

(→ 144)	CMP40M	CMP50S	CMP50M	CMP50L	CMP63S	CMP63M	CMP63L	CMP71S	CMP71M	CMP71L	CMP80S
AC	57	73	73	73	88	88	88	115	115	115	137
AD	78	86	86	86	92	92	92	102	102	102	134
ADS	78	86	86	86	92	92	92	104	104	104	137
L	350	352	391	430	387	437	490	379	407	454	419
LS	380	381	420	459	415	465	519	444	472	519	497
LB	143	145	184	223	180	230	283	172	200	247	212
LBS	173	174	213	252	208	258	312	237	265	312	290
XS	19	18	18	18	14	14	14	11	11	11	37

RZ37..

01 036 00 07

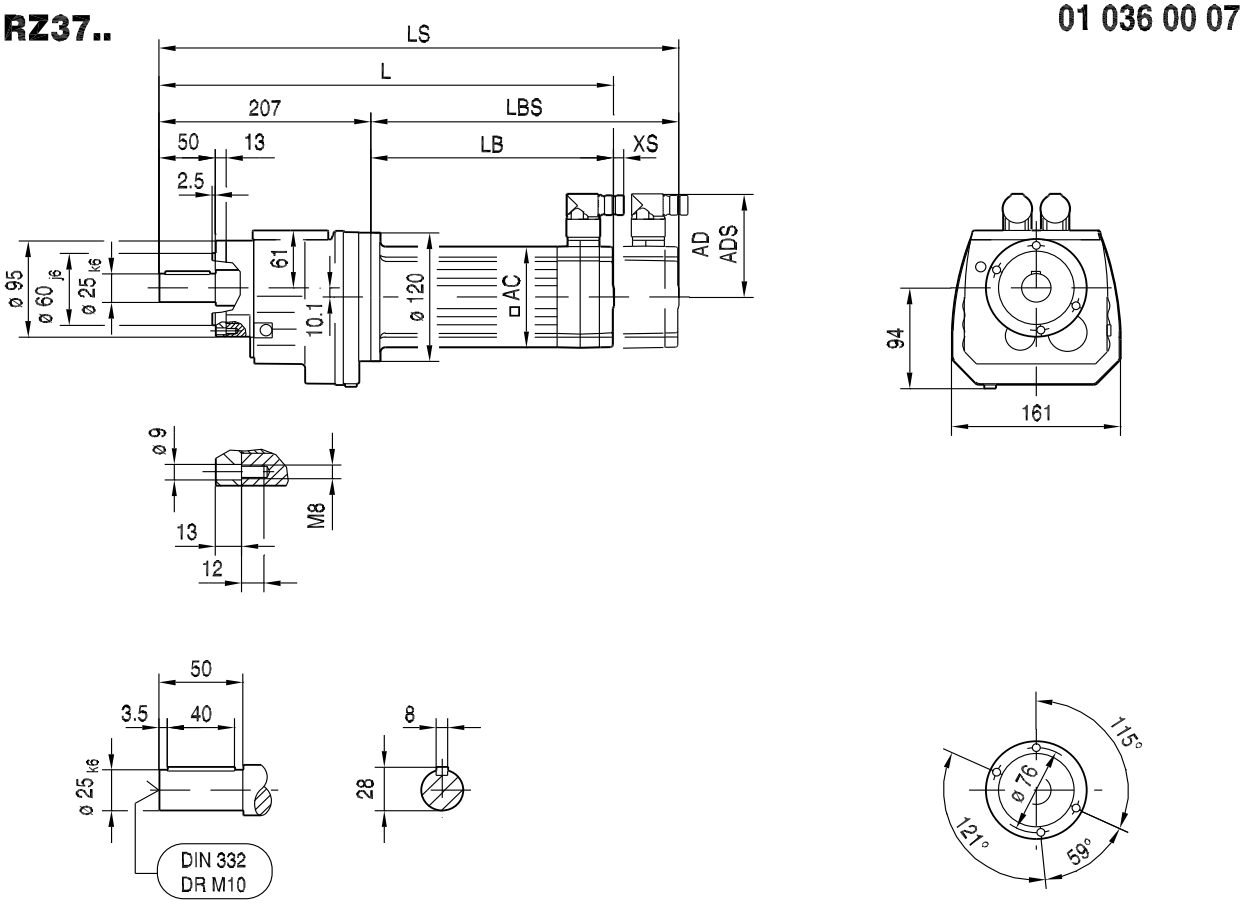

(→ 📖 144)	CMP40M	CMP50S	CMP50M	CMP50L	CMP63S	CMP63M	CMP63L	CMP71S	CMP71M	CMP71L	CMP80S
AC	57	73	73	73	88	88	88	115	115	115	137
AD	78	86	86	86	92	92	92	102	102	102	134
ADS	78	86	86	86	92	92	92	104	104	104	137
L	350	352	391	430	387	437	490	379	407	454	419
LS	380	381	420	459	415	465	519	444	472	519	497
LB	143	145	184	223	180	230	283	172	200	247	212
LBS	173	174	213	252	208	258	312	237	265	312	290
XS	19	18	18	18	14	14	14	11	11	11	37

8.3.5 R 47

M_{aDyn} [Nm]	i	CMP											
		50S	50M	50L	63S	63M	63L	71S	71M	71L	80S	80M	100S
R47 2	3.83	19	38	57	41	80	113	71	114	>166	156	>166	>166
	4.34	22	43	65	47	90	128	81	130	>170	>170	>170	>170
	4.85	24	48	72	52	101	143	90	145	>175	>175	>175	>175
	5.64	28	56	84	61	117	166	105	169	>180	>180	>180	>180
	6.00	30	60	90	65	125	177	112	179	>182	>182	>182	>182
	6.96	35	70	104	75	144	>187	130	>187	>187	>187		
	7.76	39	78	116	84	161	>190	145	>190	>190	>190		
	8.01	40	80	120	86	166	235	149	235	>300	>300	>300	>300
	9.07	46	91	135	98	188	265	169	270	>305	>305	>305	>305
	10.15	51	101	152	109	210	295	189	300	>305	>305	>305	>305
	11.79	59	118	176	127	240	>305	215	>305	>305	>305	>305	>305
	12.54	63	125	187	135	260	>305	230	>305	>305	>305	>305	>305
	14.56	73	145	215	157	300	>305	270	>305	>305	>305		
	16.22	82	162	240	175	>305	>305	300	>305	>305	>305		
	17.89	90	179	265	193	>305		>305					
	19.27	97	193	285	205	>305	>305	>305	>305				
	21.81	110	215	>305	230	>305		>305					
	23.28	117	230	>305	250	>305		>305					
	26.74	135	265		285								
	31.12	157											
	33.79	170											
R47 3	23.59	117	230	>305	245	>305	>305	>305	>305				
	26.70	132	260	>305	280	>305	>305	>305	>305				
	29.88	148	290	>305	>305	>305	>305	>305	>305				
	34.73	172	>305	>305	>305	>305	>305	>305	>305				
	36.93	182	>305	>305	>305	>305	>305	>305	>305				
	42.87	210	>305	>305	>305	>305	>305	>305	>305				
	47.75	235	>305	>305	>305	>305	>305	>305	>305				
	52.69	260	>305	>305	>305	>305		>305					
	56.73	280	>305	>305	>305	>305	>305	>305	>305				
	64.21	>305	>305	>305	>305	>305		>305					
	68.54	>305	>305	>305	>305	>305		>305					
	76.23	>305	>305	>305	>305	>305		>305					
	84.90	>305	>305	>305	>305	>305		>305					
	93.68	>305	>305	>305	>305	>305		>305					
	100.86	>305	>305	>305	>305	>305		>305					
	114.17	>305	>305	>305	>305	>305		>305					
	121.87	>305	>305	>305	>305	>305		>305					
	139.99	>305	>305		>305								
	162.94	>305											
	176.88	>305											

→ 144

m [kg]	s	CMP											
		50S	50M	50L	63S	63M	63L	71S	71M	71L	80S	80M	100S
R47	2	16	17	18	18	20	21	22	23	25	28	30	36
R47	3	17	18	19	19	20	22	22	24	26	28	31	37
RF: + 0.1 kg													

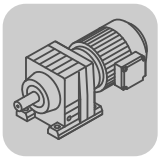

R..CMP
R..[mm]

CMP..	i	n_{epk} [1/min]	η [%]	c_{TG} R [Nm/']	c_{TG} RF [Nm/']	φ /R [']
R47 2	3.83	3657	97	11	11	11
	4.34	4144	97	11	11	11
	4.85	4500	97	11	11	10
	5.64	4500	97	11	11	10
	6.00	4500	97	11	11	10
	6.96	4500	97	11	11	10
	7.76	4500	97	11	11	10
	8.01	4500	97	15	15	8
	9.07	4500	97	15	15	8
	10.15	4500	97	15	15	7
	11.79	4500	97	15	15	7
	12.54	4500	97	15	15	7
	14.56	4500	97	15	15	7
	16.22	4500	97	15	15	7
	17.89	4500	97	15	15	7
	19.27	4500	97	15	15	7
	21.81	4500	97	15	15	7
	23.28	4500	97	15	15	7
	26.74	4500	97	15	15	7
	31.12	4500	97	15	15	7
	33.79	4500	97	15	15	7
R47 3	23.59	4500	95	15	15	8
	26.70	4500	95	15	15	8
	29.88	4500	95	15	15	8
	34.73	4500	95	15	15	8
	36.93	4500	95	15	15	8
	42.87	4500	95	15	15	8
	47.75	4500	95	15	15	8
	52.69	4500	95	15	15	8
	56.73	4500	95	15	15	8
	64.21	4500	95	15	15	8
	68.54	4500	95	15	15	8
	76.23	4500	94	15	15	7
	84.90	4500	94	15	15	7
	93.68	4500	94	15	15	7
	100.86	4500	93	15	15	7
	114.17	4500	93	15	15	7
	121.87	4500	93	15	15	7
	139.99	4500	93	15	15	7
	162.94	4500	93	15	15	7
	176.88	4500	93	15	15	7

CMP..							F_{Ramax}		F_{Rapk}	
n_e = 1400	i	M_{amax} [Nm]	M_{apk} [Nm]	$M_{aNotaus}$ [Nm]	n_{ak} [1/min]	J_G 10^{-4} [kgm^2]	R [N]	RF [N]	R [N]	RF [N]
R47 2	3.83	144	166	245	392	2.6	2080	2080	5960	5960
	4.34	146	170	248	415	2.0	2190	2190	5940	5940
	4.85	150	175	255	392	1.7	2280	2280	5930	5930
	5.64	155	180	264	372	1.3	2410	2410	5920	5920
	6.00	156	182	265	383	1.2	2470	2470	5910	5910
	6.96	159	187	270	374	0.93	2620	2620	5890	5890
	7.76	163	190	277	361	0.77	2720	2720	5880	5880
	8.01	205	300	349	200	2.0	2690	2690	5420	5420
	9.07	220	305	374	165	1.6	2780	2780	5390	5390
	10.15	230	305	391	158	1.3	2880	2880	5390	5390
	11.79	245	305	417	136	1.0	3020	3020	5390	5390
	12.54	250	305	425	128	0.95	3080	3080	5390	5390
	14.56	265	305	451	110	0.74	3230	3230	5390	5390
	16.22	275	305	468	99	0.63	3350	3350	5390	5390
	17.89	290	305	493	84	0.51	3390	3390	5390	5390
	19.27	295	305	502	83	0.48	3530	3530	5390	5390
	21.81	300	305	510	78	0.39	3710	3710	5390	5390
	23.28	300	305	510	82	0.36	3820	3820	5390	5390
	26.74	300	305	510	82	0.29	4050	4050	5390	5390
	31.12	220	305	374	212	0.23	4610	4610	5390	5390
	33.79	240	305	408	163	0.20	4680	4680	5390	5390
R47 3	23.59	300	305	510	85	1.7	3840	3840	5390	5390
	26.70	300	305	510	86	1.4	4050	4050	5390	5390
	29.88	300	305	510	84	1.2	4240	4240	5390	5390
	34.73	300	305	510	84	0.93	4520	4520	5390	5390
	36.93	300	305	510	84	0.85	4630	4630	5390	5390
	42.87	300	305	510	86	0.67	4930	4930	5390	5390
	47.75	300	305	510	86	0.56	5140	5140	5390	5390
	52.69	300	305	510	85	0.47	5350	5350	5390	5390
	56.73	300	305	510	85	0.44	5420	5420	5390	5390
	64.21	300	305	510	86	0.37	5420	5420	5390	5390
	68.54	300	305	510	86	0.33	5420	5420	5390	5390
	76.23	300	305	510	89	0.60	5420	5420	5390	5390
	84.90	300	305	510	82	0.52	5420	5420	5390	5390
	93.68	300	305	510	75	0.43	5420	5420	5390	5390
	100.86	300	305	510	69	0.41	5420	5420	5390	5390
	114.17	300	305	510	61	0.34	5420	5420	5390	5390
	121.87	300	305	510	57	0.31	5420	5420	5390	5390
	139.99	300	305	510	50	0.25	5420	5420	5390	5390
	162.94	300	305	510	43	0.20	5420	5420	5390	5390
	176.88	300	305	510	40	0.18	5420	5420	5390	5390

01 037 00 07

R47..

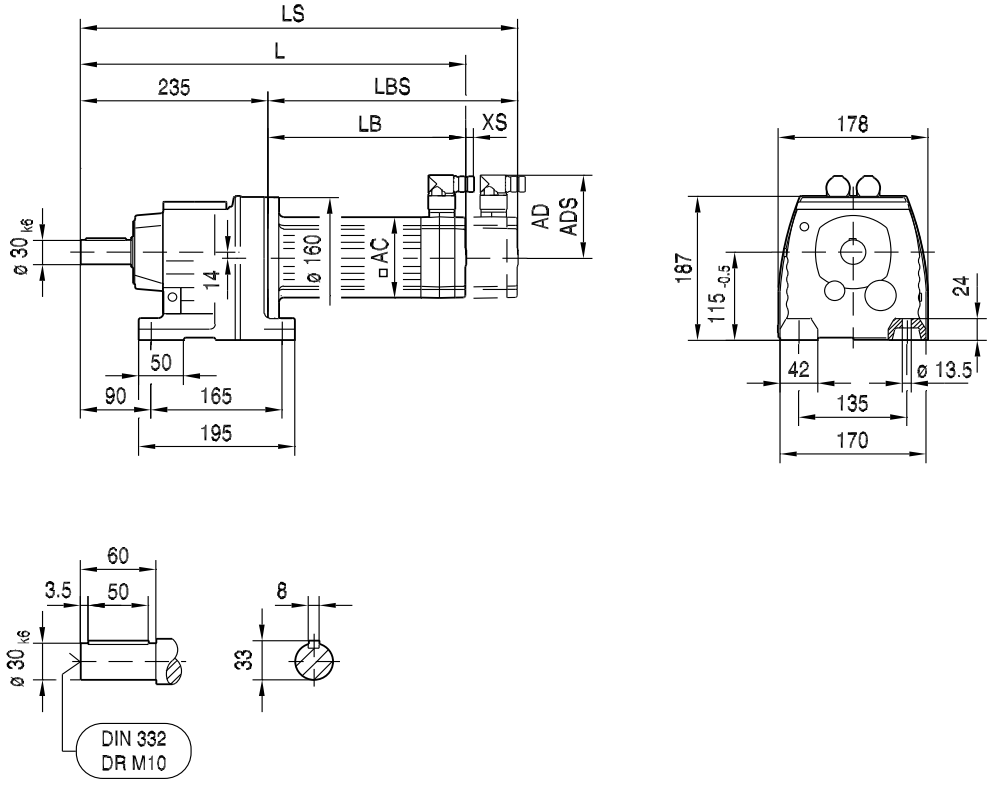

R47F..

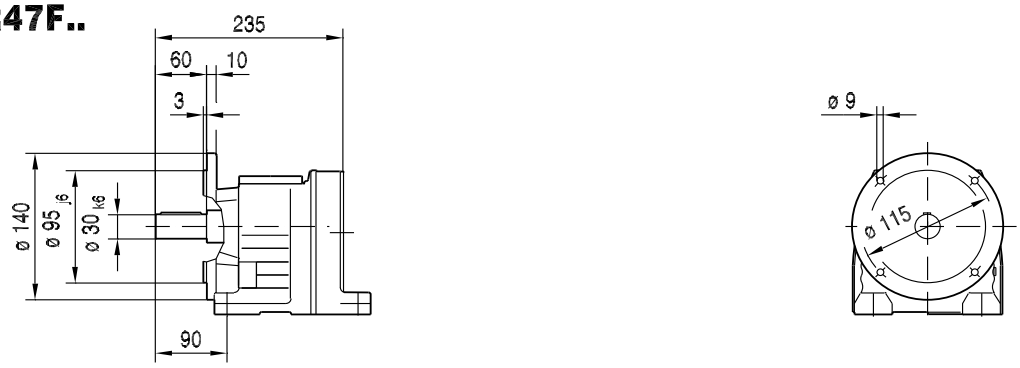

(→ 📖 144)	CMP50M	CMP50L	CMP63S	CMP63M	CMP63L	CMP71S	CMP71M	CMP71L	CMP80S	CMP80M	CMP100S
AC	73	73	88	88	88	115	115	115	137	137	162
AD	86	86	92	92	92	102	102	102	134	134	146
ADS	86	86	92	92	92	104	104	104	137	137	147
L	413	452	408	458	508	401	426	476	441	479	477
LS	442	481	437	487	537	466	491	541	519	557	573
LB	178	217	173	223	273	166	191	241	206	244	242
LBS	207	246	202	252	302	231	256	306	284	322	338
XS	18	18	14	14	14	11	11	11	37	37	37

01 038 00 07

RF47..

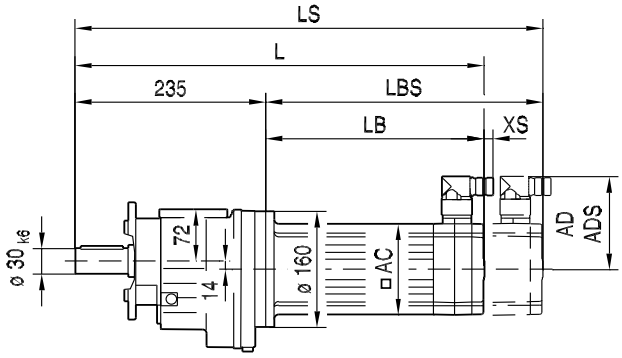

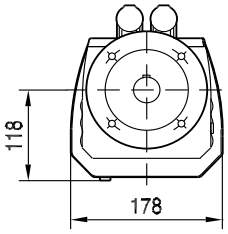

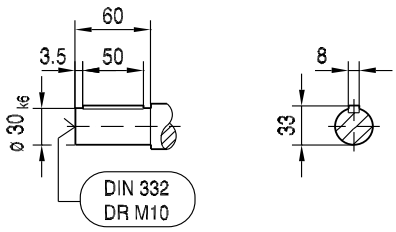

ø 140

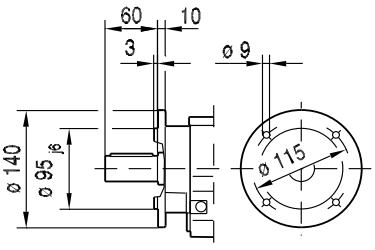

ø 160

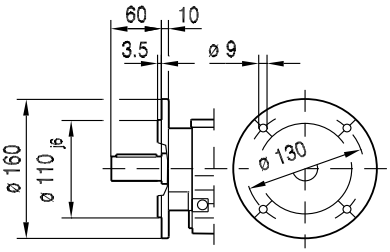

ø 200

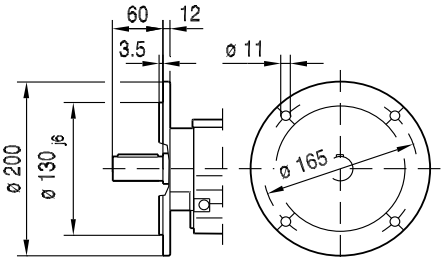

(→ 144)	CMP50M	CMP50L	CMP63S	CMP63M	CMP63L	CMP71S	CMP71M	CMP71L	CMP80S	CMP80M	CMP100S
AC	73	73	88	88	88	115	115	115	137	137	162
AD	86	86	92	92	92	102	102	102	134	134	146
ADS	86	86	92	92	92	104	104	104	137	137	147
L	413	452	408	458	508	401	426	476	441	479	477
LS	442	481	437	487	537	466	491	541	519	557	573
LB	178	217	173	223	273	166	191	241	206	244	242
LBS	207	246	202	252	302	231	256	306	284	322	338
XS	18	18	14	14	14	11	11	11	37	37	37

RZ47..

01 039 00 07

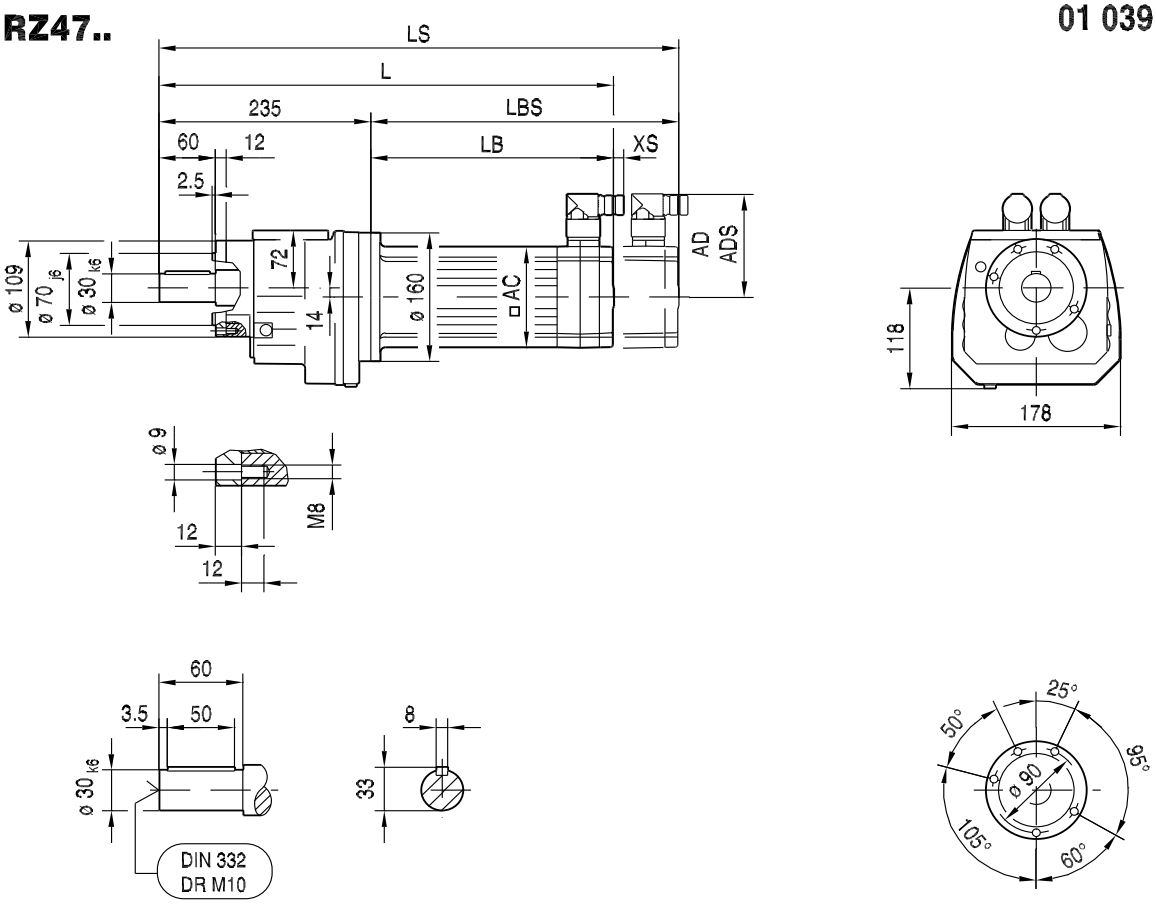

(→ 📖 144)	CMP50M	CMP50L	CMP63S	CMP63M	CMP63L	CMP71S	CMP71M	CMP71L	CMP80S	CMP80M	CMP100S
AC	73	73	88	88	88	115	115	115	137	137	162
AD	86	86	92	92	92	102	102	102	134	134	146
ADS	86	86	92	92	92	104	104	104	137	137	147
L	413	452	408	458	508	401	426	476	441	479	477
LS	442	481	437	487	537	466	491	541	519	557	573
LB	178	217	173	223	273	166	191	241	206	244	242
LBS	207	246	202	252	302	231	256	306	284	322	338
XS	18	18	14	14	14	11	11	11	37	37	37

8.3.6 R 57

M_{aDyn} [Nm]		CMP														
	i	50S	50M	50L	63S	63M	63L	71S	71M	71L	80S	80M	80L	100S	100M	100L
	4.39		44	66	47	91	129	82	131	200	179	265	>420	290	>420	>420
	5.05	25	50	75	54	105	149	94	151	225	205	305	>425	330	>425	>425
	5.82	29	58	87	63	121	172	108	174	260	235	350	>425	385	>425	>425
	6.41	32	64	96	69	133	189	119	192	290	260	385		420		
	7.53	38	75	112	81	156	220	140	220	340	305	>425		>425		
	7.97	40	80	119	86	165	235	148	235	360	325	>425		>425		
	9.06	46	91	135	98	188	265	169	270	410	365					
R57	9.35	47	93	140	101	194	275	174	275	425	380	>455	>455	>455	>455	>455
2	10.79	54	108	161	116	220	315	200	320	>455	440	>455	>455	>455	>455	>455
	11.88	60	119	177	128	245	350	220	350	>455	>455	>455		>455		
	13.95	70	139	205	150	285	410	255	415	>455	>455	>455		>455		
	14.77	74	148	220	159	305	435	275	440	>455	>455	>455		>455		
	16.79	85	168	250	181	345	>455	310	>455	>455	>455					
	18.60	94	186	275	200	385	>455	345	>455	>455	>455					
	21.93	111	215	325	235	>455	>455	405	>455							
	24.99	126	245	370	265	>455		>455								
	26.31	133	260	390	280	>455		>455								
	26.97	133	260	390	280	>455	>455	>455	>455	>455	>455	>455		>455		
	30.18	149	295	440	315	>455	>455	>455	>455	>455	>455	>455		>455		
	35.07	173	340	>455	365	>455	>455	>455	>455	>455	>455	>455		>455		
	37.30	184	360	>455	390	>455	>455	>455	>455	>455	>455	>455		>455		
	43.30	210	420	>455	>455	>455	>455	>455	>455	>455	>455					
	48.23	235	>455	>455	>455	>455	>455	>455	>455	>455	>455					
	53.22	260	>455	>455	>455	>455		>455								
	57.29	280	>455	>455	>455	>455	>455	>455	>455							
R57	64.85	320	>455	>455	>455	>455		>455								
3	69.23	340	>455	>455	>455	>455		>455								
	80.55	390	>455	>455	>455	>455	>455	>455	>455	>455	>455					
	89.71	435	>455	>455	>455	>455	>455	>455	>455	>455	>455					
	98.99	>455	>455	>455	>455	>455		>455								
	106.58	>455	>455	>455	>455	>455	>455	>455	>455							
	120.63	>455	>455	>455	>455	>455		>455								
	128.77	>455	>455	>455	>455	>455		>455								
	147.92	>455	>455		>455											
	172.17	>455														
	186.89	>455														

→ 144

m [kg]		CMP														
	s	50S	50M	50L	63S	63M	63L	71S	71M	71L	80S	80M	80L	100S	100M	100L
R57	2	21	22	23	23	25	26	27	28	30	33	35	39	41	46	54
R57	3	22	23	24	24	26	27	27	29	31	34	36	40	42	46	55
RF: + 3.4 kg / RM: + 15.4 kg																

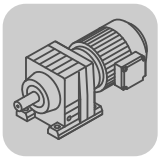

R..CMP
R..[mm]

CMP..	i	n_{epk} [1/min]	η [%]	c_{TG} R [Nm/']	c_{TG} RF [Nm/']	c_{TG} RM [Nm/']	φ /R [']
R57 2	4.39	4500	97	21	21	17	10
	5.05	4500	97	21	21	17	10
	5.82	4500	97	21	21	17	10
	6.41	4500	97	21	21	17	9
	7.53	4500	97	21	21	17	9
	7.97	4500	97	21	21	17	9
	9.06	4500	97	21	21	17	9
	9.35	4500	97	25	25	20	7
	10.79	4500	97	25	25	20	7
	11.88	4500	97	25	25	20	7
	13.95	4500	97	25	25	20	7
	14.77	4500	97	25	25	20	7
	16.79	4500	97	25	25	20	7
	18.60	4500	97	25	25	20	7
	21.93	4500	97	25	25	20	7
	24.99	4500	97	25	25	20	6
	26.31	4500	97	25	25	20	6
R57 3	26.97	4500	95	26	26	20	8
	30.18	4500	95	26	26	20	8
	35.07	4500	95	26	26	20	8
	37.30	4500	95	26	26	20	8
	43.30	4500	95	26	26	20	8
	48.23	4500	95	26	26	20	8
	53.22	4500	95	26	26	20	8
	57.29	4500	95	26	26	20	8
	64.85	4500	95	26	26	20	8
	69.23	4500	95	26	26	20	7
	80.55	4500	94	26	26	20	7
	89.71	4500	94	26	26	20	7
	98.99	4500	94	26	26	20	7
	106.58	4500	94	26	26	20	7
	120.63	4500	94	26	26	20	7
	128.77	4500	94	26	26	20	7
	147.92	4500	94	26	26	20	7
	172.17	4500	93	26	26	20	7
	186.89	4500	93	26	26	20	7

CMP..							F_{Ramax}			F_{Rapk}		
n_e = 1400	i	M_{amax} [Nm]	M_{apk} [Nm]	$M_{aNotaus}$ [Nm]	n_{ak} [1/min]	J_G 10^{-4} [kgm^2]	R [N]	RF [N]	RM [N]	R [N]	RF [N]	RM [N]
R57 2	4.39	280	420	476	319	4.3	1900	1900	4000	7230	7230	4000
	5.05	305	425	519	277	3.4	1730	1730	4000	7210	7210	4000
	5.82	320	425	544	241	2.7	1820	1820	4000	7210	7210	4000
	6.41	335	425	570	218	2.3	1770	1770	4000	7210	7210	4000
	7.53	350	425	595	226	1.8	1950	1950	4000	7210	7210	4000
	7.97	355	425	604	213	1.6	2020	2020	4000	7210	7210	4000
	9.06	375	425	638	188	1.3	2010	2010	4000	7210	7210	4000
	9.35	370	455	629	193	2.8	3180	3180	4000	7080	7080	4000
	10.79	390	455	663	167	2.2	3330	3330	4000	7080	7080	4000
	11.88	405	455	689	143	1.9	3430	3430	4000	7080	7080	4000
	13.95	430	455	731	122	1.6	3610	3610	4000	7080	7080	4000
	14.77	435	455	740	115	1.4	3690	3690	4000	7080	7080	4000
	16.79	450	455	765	107	1.1	3860	3860	4000	7080	7080	4000
	18.60	450	455	765	108	0.94	4050	4050	4000	7080	7080	4000
	21.93	450	455	765	109	0.73	4370	4370	4000	7080	7080	4000
	24.99	450	455	765	108	0.51	4640	4640	4000	7080	7080	4000
	26.31	450	455	765	110	0.45	4750	4750	4000	7080	7080	4000

CMP..							F_{Ramax}			F_{Rapk}		
n_e = 1400	i	M_{amax} [Nm]	M_{apk} [Nm]	$M_{aNotaus}$ [Nm]	n_{ak} [1/min]	J_G 10^{-4} [kgm^2]	R [N]	RF [N]	RM [N]	R [N]	RF [N]	RM [N]
	26.97	450	455	765	63	1.5	4800	4800	4000	7080	7080	4000
	30.18	450	455	765	63	1.3	5040	5040	4000	7080	7080	4000
	35.07	450	455	765	66	0.97	5390	5390	4000	7080	7080	4000
	37.30	450	455	765	64	0.89	5530	5530	4000	7080	7080	4000
	43.30	450	455	765	65	0.70	5900	5900	4000	7080	7080	4000
	48.23	450	455	765	64	0.60	6170	6170	4000	7080	7080	4000
	53.22	450	455	765	66	0.49	6430	6430	4000	7080	7080	4000
	57.29	450	455	765	65	0.46	6630	6630	4000	7080	7080	4000
R57	64.85	450	455	765	65	0.38	6980	6980	4000	7080	7080	4000
 **3**	69.23	450	455	765	65	0.35	7100	7100	4000	7080	7080	4000
	80.55	450	455	765	56	0.62	7100	7100	4000	7080	7080	4000
	89.71	450	455	765	56	0.54	7100	7100	4000	7080	7080	4000
	98.99	450	455	765	56	0.45	7100	7100	4000	7080	7080	4000
	106.58	450	455	765	55	0.42	7100	7100	4000	7080	7080	4000
	120.63	450	455	765	56	0.35	7100	7100	4000	7080	7080	4000
	128.77	450	455	765	54	0.32	7100	7100	4000	7080	7080	4000
	147.92	450	455	765	47	0.26	7100	7100	4000	7080	7080	4000
	172.17	450	455	765	41	0.21	7100	7100	4000	7080	7080	4000
	186.89	450	455	765	37	0.18	7100	7100	4000	7080	7080	4000

01 040 00 07

R57..

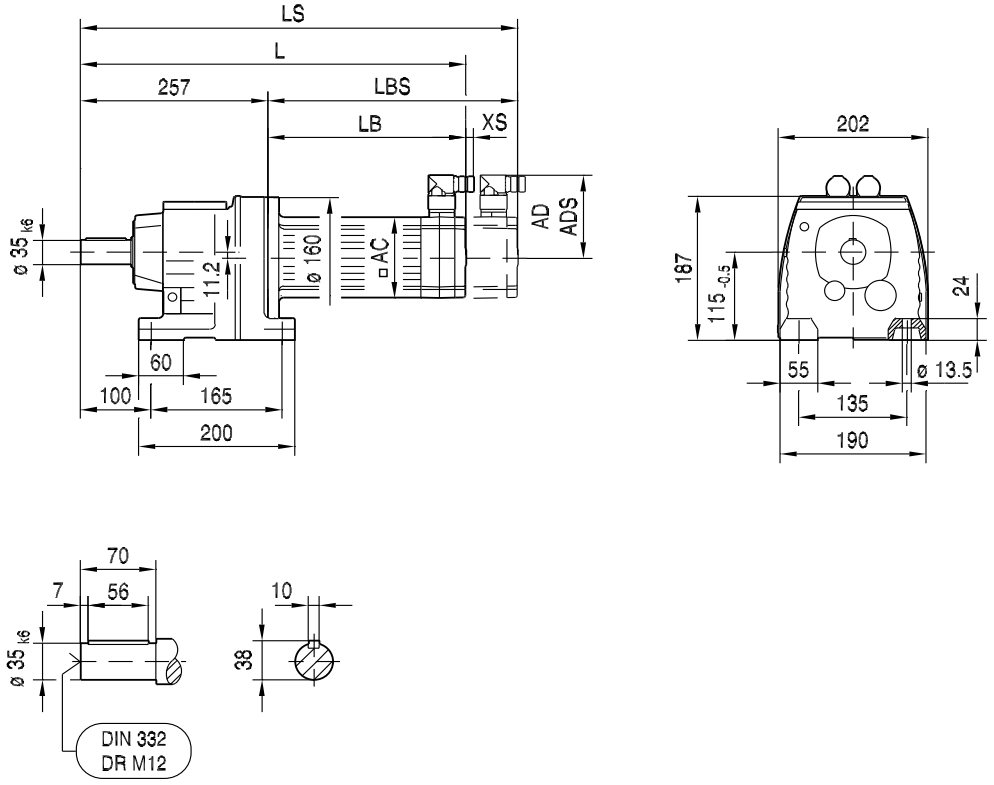

R57F..

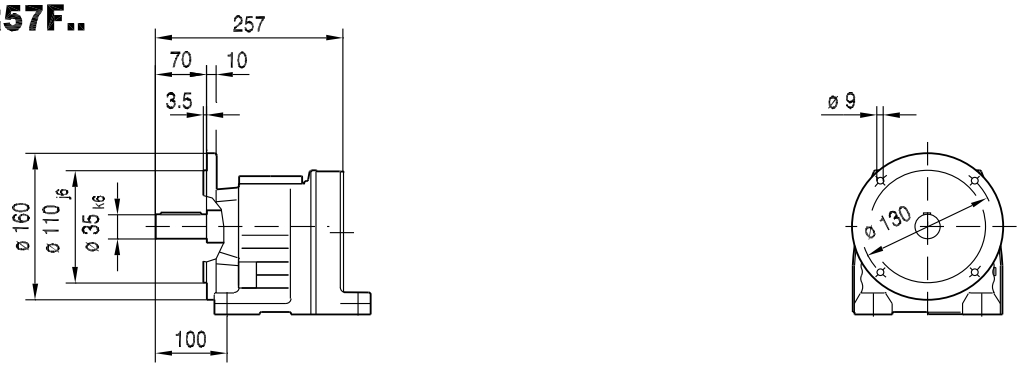

(→ 📖 144)	CMP63M	CMP63L	CMP71S	CMP71M	CMP71L	CMP80S	CMP80M	CMP80L	CMP100S	CMP100M	CMP100L
AC	88	88	115	115	115	137	137	137	162	162	162
AD	92	92	102	102	102	134	134	134	146	146	146
ADS	92	92	104	104	104	137	137	137	147	147	147
L	480	530	423	448	498	463	501	565	499	536	616
LS	509	559	488	513	563	541	579	643	595	632	712
LB	223	273	166	191	241	206	244	308	242	279	359
LBS	252	302	231	256	306	284	322	386	338	375	455
XS	14	14	11	11	11	37	37	37	37	37	37

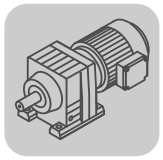

RF57..

01 041 00 07

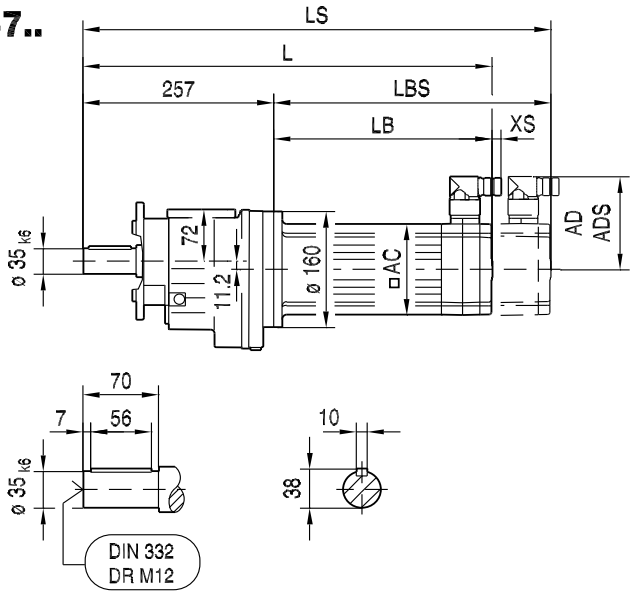

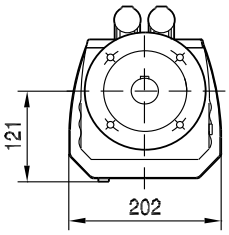

ø 160

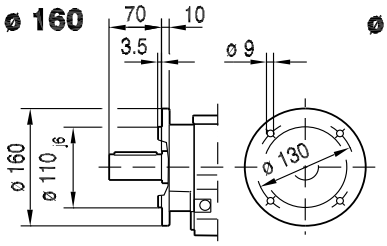

ø 200

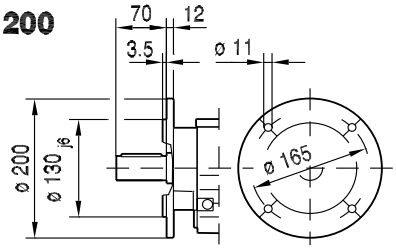

ø 250

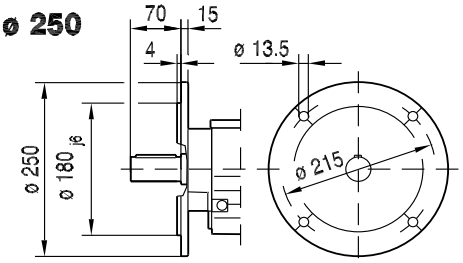

RM57..

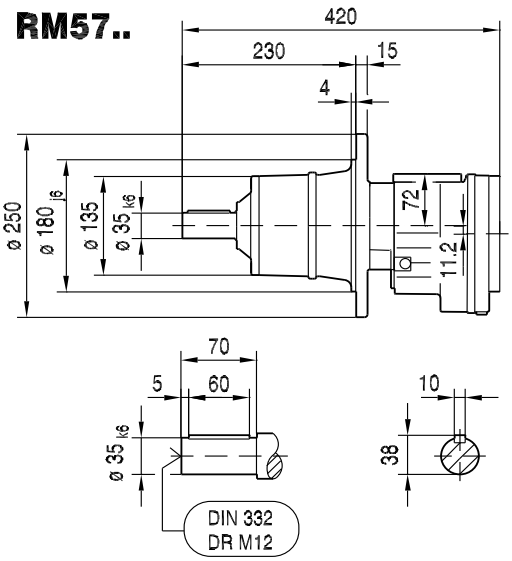

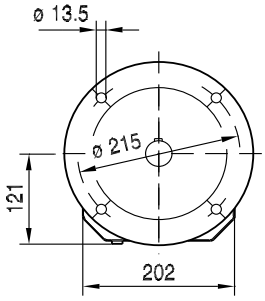

(→ 144)	CMP63M	CMP63L	CMP71S	CMP71M	CMP71L	CMP80S	CMP80M	CMP80L	CMP100S	CMP100M	CMP100L
AC	88	88	115	115	115	137	137	137	162	162	162
AD	92	92	102	102	102	134	134	134	146	146	146
ADS	92	92	104	104	104	137	137	137	147	147	147
L	480	530	423	448	498	463	501	565	499	536	616
LS	509	559	488	513	563	541	579	643	595	632	712
LB	223	273	166	191	241	206	244	308	242	279	359
LBS	252	302	231	256	306	284	322	386	338	375	455
XS	14	14	11	11	11	37	37	37	37	37	37

RZ57..

01 042 00 07

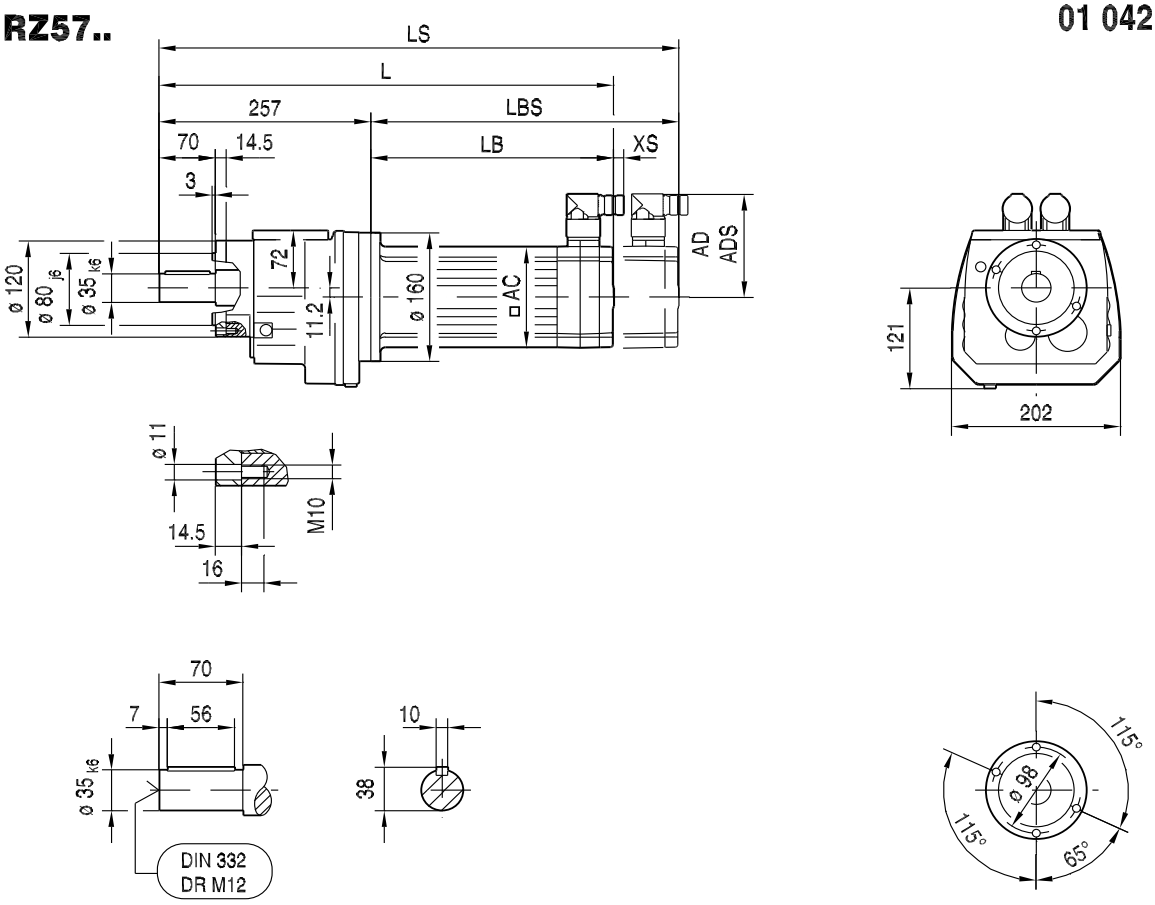

(→ 📖 144)	CMP63M	CMP63L	CMP71S	CMP71M	CMP71L	CMP80S	CMP80M	CMP80L	CMP100S	CMP100M	CMP100L
AC	88	88	115	115	115	137	137	137	162	162	162
AD	92	92	102	102	102	134	134	134	146	146	146
ADS	92	92	104	104	104	137	137	137	147	147	147
L	480	530	423	448	498	463	501	565	499	536	616
LS	509	559	488	513	563	541	579	643	595	632	712
LB	223	273	166	191	241	206	244	308	242	279	359
LBS	252	302	231	256	306	284	322	386	338	375	455
XS	14	14	11	11	11	37	37	37	37	37	37

8.3.7 R 67

M_{aDyn} [Nm]		CMP														
	i	50S	50M	50L	63S	63M	63L	71S	71M	71L	80S	80M	80L	100S	100M	100L
	4.29		43	64	46	89	127	80	128	195	175	260	>405	280	>405	>405
	4.93	25	49	74	53	102	145	92	147	220	200	295	>435	325	>435	>435
	5.70	29	57	85	61	118	168	106	170	255	230	345	>465	375	>465	>465
	6.27	32	63	94	68	130	185	117	187	285	255	380		415		
	7.36	37	74	110	79	153	215	137	215	330	300	445		>485		
	7.79	39	78	116	84	162	225	145	230	350	315	470		>485		
	8.70		87	130	94	181	255	162	255	395	355	525	>660	575	>660	>660
R67	10.00	50	100	149	108	205	290	186	295	450	405	605	>665	660	>665	>665
2	11.54	58	115	172	124	235	340	210	340	520	470	>665	>665	>665	>665	>665
	12.70	64	127	190	137	260	370	235	375	575	515	>665		>665		
	14.91	75	149	220	161	305	435	275	445	>665	605	>665		>665		
	15.79	80	158	235	170	325	465	290	470	>665	640	>665		>665		
	17.95	91	179	265	193	370	525	330	535	>665	>665					
	19.89	100	199	295	210	410	585	370	590	>665	>665					
	23.44	118	230	350	250	485	>665	435	>665							
	26.72	135	265	395	285	550		495								
	28.13	142	280	420	300	580		520								
	28.83	142	280	420	300	585	>595	525	>595	>595	>595	>595		>595		
	32.27	159	315	470	340	>595	>595	585	>595	>595	>595	>595		>595		
	37.50	185	365	545	395	>595	>595	>595	>595	>595	>595	>595		>595		
	39.88	197	390	580	420	>595	>595	>595	>595	>595	>595	>595		>595		
	46.29	225	450	>600	485	>600	>600	>600	>600	>600	>600					
	51.56	250	500	>600	540	>600	>600	>600	>600	>600	>600					
	56.89	280	555	>600	595	>600		>600								
	61.26	300	595	>600	>600	>600	>600	>600	>600							
R67	69.75	340	>660	>660	>660	>660	>660	>660	>660	>660	>660	>660		>660		
3	74.17	365	>660	>660	>660	>660	>660	>660	>660	>660	>660	>660		>660		
	86.11	425	>660	>660	>660	>660	>660	>660	>660	>660	>660					
	95.91	470	>660	>660	>660	>660	>660	>660	>660	>660	>660					
	105.83	520	>660	>660	>660	>660		>660								
	113.94	560	>660	>660	>660	>660	>660	>660	>660							
	128.97	635	>660	>660	>660	>660		>660								
	137.67	>660	>660	>660	>660	>660		>660								
	158.14	>660	>660		>660											
	184.07	>660														
	199.81	>660														

→ 144

m [kg]		CMP														
	s	50S	50M	50L	63S	63M	63L	71S	71M	71L	80S	80M	80L	100S	100M	100L
R67	2	28	29	30	30	31	33	33	34	37	39	41	46	48	52	61
R67	3	29	30	31	31	32	34	34	35	38	40	42	47	49	53	62
RF: + 3.2 kg / RM: + 19.0 kg																

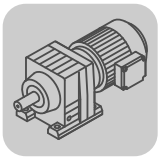

R..CMP
R..[mm]

CMP..	i	n_{epk} [1/min]	η [%]	c_{TG} R [Nm/']	c_{TG} RF [Nm/']	c_{TG} RM [Nm/']	φ /R [']
R67 2	4.29	3700	97	24	24	22	10
	4.93	4252	97	24	24	22	9
	5.70	4500	97	24	24	22	9
	6.27	4500	97	24	24	22	9
	7.36	4500	97	24	24	22	8
	7.79	4500	97	24	24	22	8
	8.70	4500	97	32	32	28	7
	10.00	4500	97	32	32	28	7
	11.54	4500	97	32	32	28	7
	12.70	4500	97	32	32	28	6
	14.91	4500	97	32	32	28	6
	15.79	4500	97	32	32	28	6
	17.95	4500	97	32	32	28	6
	19.89	4500	97	32	32	28	6
	23.44	4500	97	32	32	28	6
	26.72	4500	97	32	32	28	6
	28.13	4500	97	32	32	28	6
R67 3	28.83	4500	95	33	33	29	7
	32.27	4500	95	33	33	29	7
	37.50	4500	95	33	33	29	7
	39.88	4500	95	33	33	29	7
	46.29	4500	95	33	33	29	7
	51.56	4500	95	33	33	29	7
	56.89	4500	95	33	33	29	7
	61.26	4500	95	33	33	29	7
	69.75	4500	95	33	33	29	7
	74.17	4500	95	33	33	29	7
	86.11	4500	95	33	33	29	6
	95.91	4500	95	33	33	29	6
	105.83	4500	95	33	33	29	6
	113.94	4500	95	33	33	29	6
	128.97	4500	95	33	33	29	6
	137.67	4500	94	33	33	29	6
	158.14	4500	94	33	33	29	6
	184.07	4500	94	33	33	29	6
	199.81	4500	93	33	33	29	6

CMP..							F_{Ramax}			F_{Rapk}		
n_e = 1400	i	M_{amax} [Nm]	M_{apk} [Nm]	$M_{aNotaus}$ [Nm]	n_{ak} [1/min]	J_G 10^{-4} [kgm^2]	R [N]	RF [N]	RM [N]	R [N]	RF [N]	RM [N]
R67 2	4.29	270	405	459	326	5.9	5000	5000	8720	9300	9300	9800
	4.93	290	435	493	284	4.6	5210	5210	9120	9100	9100	9760
	5.70	310	465	527	246	3.6	5450	5450	9560	8870	8870	9710
	6.27	330	485	561	223	3.0	5590	5590	9850	8710	8710	9680
	7.36	370	485	629	190	2.4	5790	5790	9850	8710	8710	9680
	7.79	380	485	646	180	2.1	5830	5830	9840	8710	8710	9680
	8.70	440	660	748	161	4.0	5960	5960	9750	5350	5350	9330
	10.00	470	665	799	140	3.2	6220	6220	9700	4700	4700	9320
	11.54	500	665	850	130	2.5	6500	6500	9660	4700	4700	9320
	12.70	520	665	884	118	2.2	6640	6640	9620	4700	4700	9320
	14.91	550	665	935	101	1.7	6980	6980	9560	4700	4700	9320
	15.79	560	665	952	95	1.6	7130	7130	9540	4700	4700	9320
	17.95	590	665	1003	84	1.2	7330	7330	9480	4700	4700	9320
	19.89	600	665	1020	75	1.0	7560	7560	9460	4700	4700	9320
	23.44	560	665	952	94	0.80	8010	8010	9540	4700	4700	9320
	26.72	540	665	918	105	0.56	8210	8210	9580	4700	4700	9320
	28.13	540	665	918	103	0.50	8210	8210	9580	4700	4700	9320

CMP..							F_{Ramax}			F_{Rapk}		
n_e = 1400	i	M_{amax} [Nm]	M_{apk} [Nm]	$M_{aNotaus}$ [Nm]	n_{ak} [1/min]	J_G 10^{-4} [kgm^2]	R [N]	RF [N]	RM [N]	R [N]	RF [N]	RM [N]
	28.83	520	595	884	49	1.5	8400	8400	9620	7620	7620	9470
	32.27	540	595	918	43	1.3	8210	8210	9580	7620	7620	9470
	37.50	570	595	969	37	1.0	7900	7900	9520	7620	7620	9470
	39.88	580	595	986	35	0.93	7790	7790	9500	7620	7620	9470
	46.29	600	600	1020	32	0.72	7560	7560	9460	7620	7620	9470
	51.56	600	600	1020	33	0.61	7560	7560	9460	7620	7620	9470
	56.89	600	600	1020	33	0.50	7560	7560	9460	7620	7620	9470
	61.26	600	600	1020	33	0.47	7560	7560	9460	7620	7620	9470
R67	69.75	600	660	1020	29	0.88	7560	7560	9460	5350	5350	9330
 **3**	74.17	600	660	1020	28	0.81	7560	7560	9460	5350	5350	9330
	86.11	600	660	1020	29	0.63	7560	7560	9460	5350	5350	9330
	95.91	600	660	1020	29	0.54	7560	7560	9460	5350	5350	9330
	105.83	600	660	1020	29	0.45	7560	7560	9460	5350	5350	9330
	113.94	600	660	1020	30	0.42	7560	7560	9460	5350	5350	9330
	128.97	600	660	1020	29	0.36	7560	7560	9460	5350	5350	9330
	137.67	600	660	1020	30	0.32	7560	7560	9460	5350	5350	9330
	158.14	600	660	1020	30	0.26	7560	7560	9460	5350	5350	9330
	184.07	600	660	1020	30	0.21	7560	7560	9460	5350	5350	9330
	199.81	600	660	1020	30	0.19	7560	7560	9460	5350	5350	9330

01 043 00 07

R67..

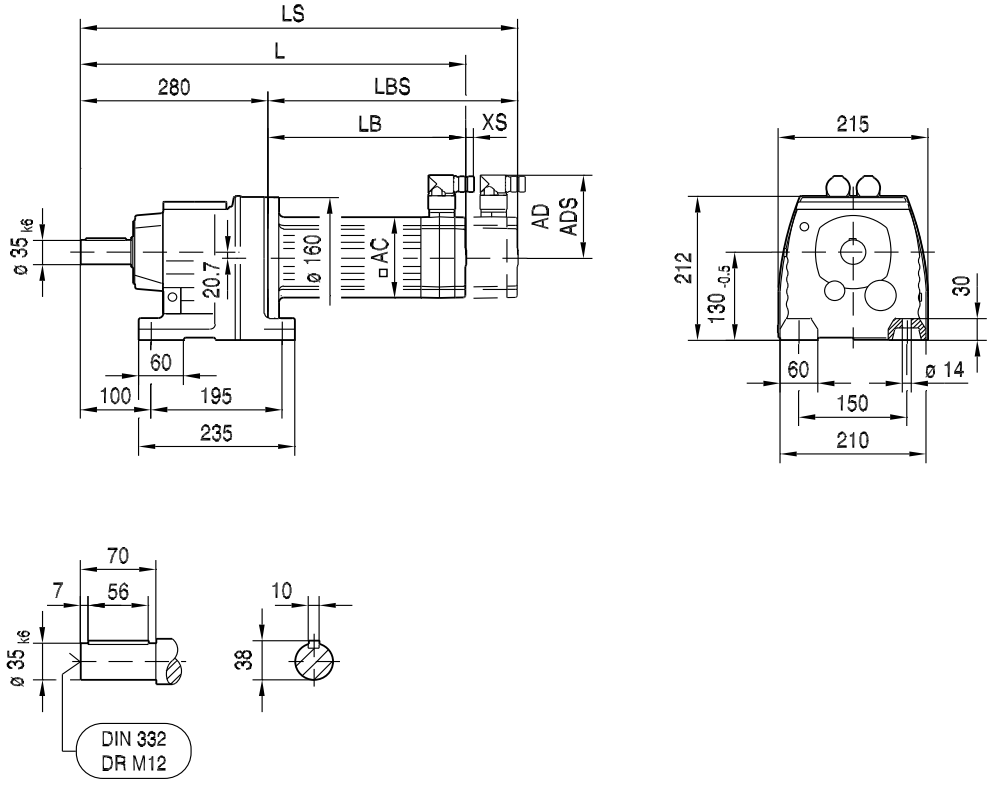

R67F..

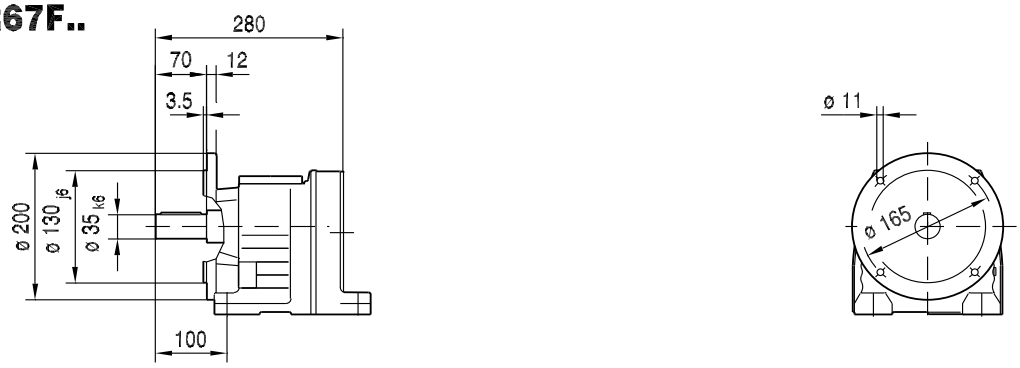

(→ 📖 144)	CMP63M	CMP63L	CMP71S	CMP71M	CMP71L	CMP80S	CMP80M	CMP80L	CMP100S	CMP100M	CMP100L
AC	88	88	115	115	115	137	137	137	162	162	162
AD	92	92	102	102	102	134	134	134	146	146	146
ADS	92	92	104	104	104	137	137	137	147	147	147
L	503	553	446	471	521	486	524	588	522	559	639
LS	532	582	511	536	586	564	602	666	618	655	735
LB	223	273	166	191	241	206	244	308	242	279	359
LBS	252	302	231	256	306	284	322	386	338	375	455
XS	14	14	11	11	11	37	37	37	37	37	37

01 044 00 07

RF67..

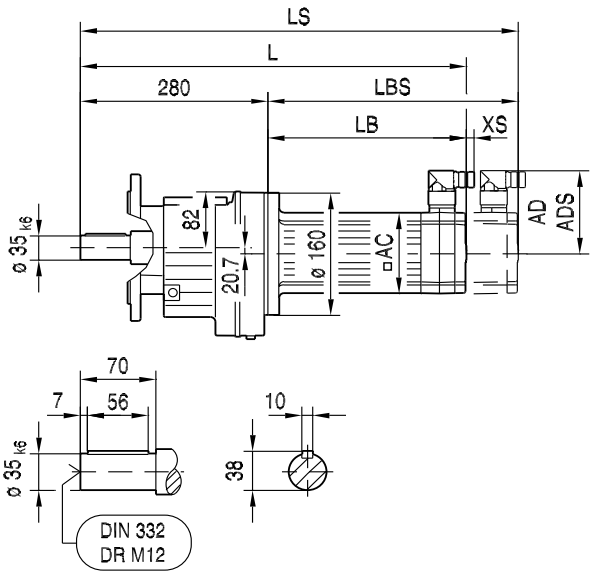

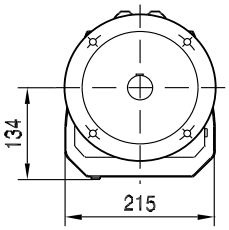

8

ø 200

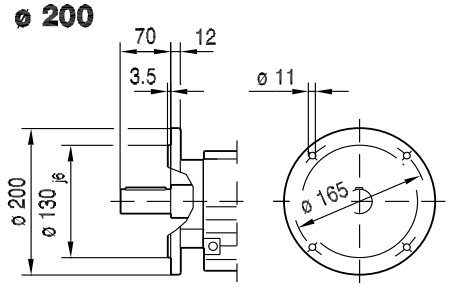

ø 250

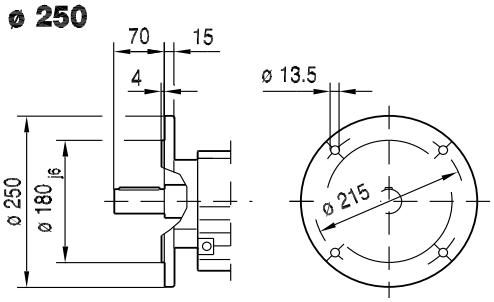

RM67..

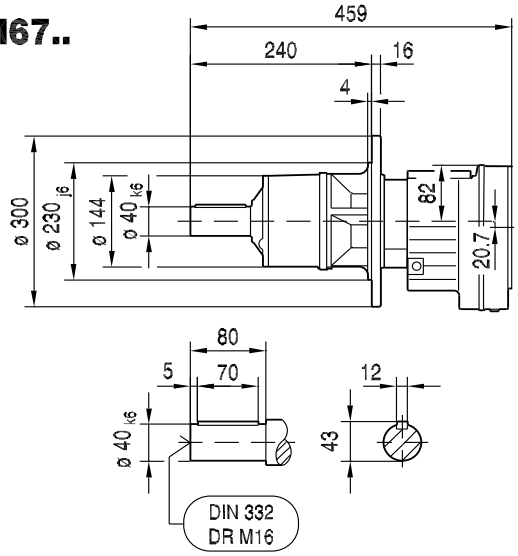

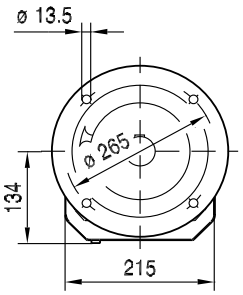

(→ 📖 144)	CMP63M	CMP63L	CMP71S	CMP71M	CMP71L	CMP80S	CMP80M	CMP80L	CMP100S	CMP100M	CMP100L
AC	88	88	115	115	115	137	137	137	162	162	162
AD	92	92	102	102	102	134	134	134	146	146	146
ADS	92	92	104	104	104	137	137	137	147	147	147
L	503	553	446	471	521	486	524	588	522	559	639
LS	532	582	511	536	586	564	602	666	618	655	735
LB	223	273	166	191	241	206	244	308	242	279	359
LBS	252	302	231	256	306	284	322	386	338	375	455
XS	14	14	11	11	11	37	37	37	37	37	37

01 045 00 07

RZ67..

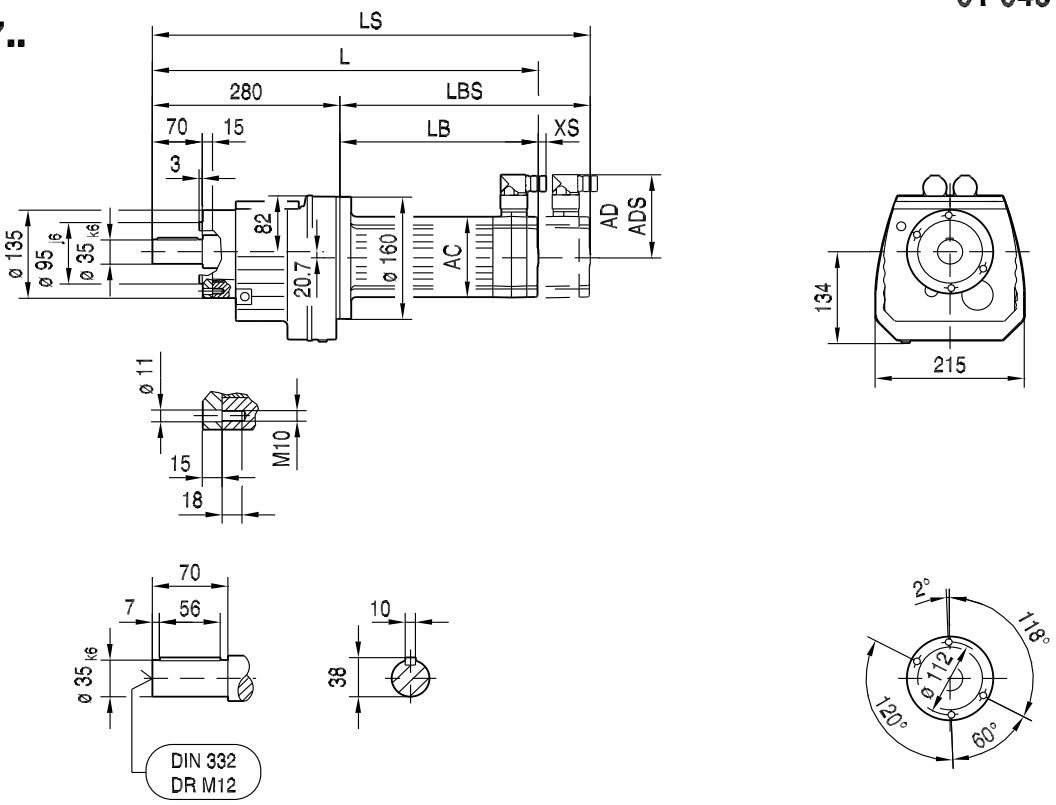

(→ 144)	CMP63M	CMP63L	CMP71S	CMP71M	CMP71L	CMP80S	CMP80M	CMP80L	CMP100S	CMP100M	CMP100L
AC	88	88	115	115	115	137	137	137	162	162	162
AD	92	92	102	102	102	134	134	134	146	146	146
ADS	92	92	104	104	104	137	137	137	147	147	147
L	503	553	446	471	521	486	524	588	522	559	639
LS	532	582	511	536	586	564	602	666	618	655	735
LB	223	273	166	191	241	206	244	308	242	279	359
LBS	252	302	231	256	306	284	322	386	338	375	455
XS	14	14	11	11	11	37	37	37	37	37	37

8.3.8 R 77

M_{aDyn} [Nm]		CMP											
	i	63S	63M	63L	71S	71M	71L	80S	80M	80L	100S	100M	100L
R77 2	5.31	57	110	157	99	159	240	215	320	550	350	555	>765
	5.99	64	124	177	112	179	270	240	360	620	395	625	>810
	6.79	73	141	200	126	200	305	275	410	700	445	710	>840
	7.74	83	161	225	144	230	350	315	465	800	510	810	>840
	8.59	92	178	250	160	255	390	350	520		565		
	9.64	104	200	280	180	285	435	390	585	>900	635	>900	>900
	10.88	117	225	320	200	325	490	440	660	>900	720	>900	>900
	12.33	133	255	360	225	365	560	500	745	>900	810	>900	>900
	14.05	151	290	410	260	415	635	570	850	>900	>900	>900	>900
	15.60	168	320	460	290	465	705	635	>900		>900		
	17.82	192	365	525	330	530	810	725	>900		>900		
	18.80	200	390	550	350	560	850	765	>900		>900		
	21.43	230	440	630	395	640	>900	870					
	23.37	250	485	685	435	695	>900	>900					
R77 3	25.23	265	515	735	465	745	>900	>900	>900	>900	>900	>900	>900
	29.00	305	595	840	530	850	>900	>900	>900	>900	>900	>900	>900
	33.47	355	685	>900	615	>900	>900	>900	>900	>900	>900	>900	>900
	36.83	385	745	>900	670	>900	>900	>900	>900		>900		
	43.26	455	870	>900	785	>900	>900	>900	>900		>900		
	45.81	480	>900	>900	830	>900	>900	>900	>900		>900		
	52.07	545	>900	>900	>900	>900	>900	>900					
	57.68	605	>900	>900	>900	>900	>900	>900					
	65.77	690	>900	>900	>900	>900	>900	>900	>900		>900		
	77.24	810	>900	>900	>900	>900	>900	>900	>900		>900		
	81.80	860	>900	>900	>900	>900	>900	>900	>900		>900		
	92.97	>900	>900	>900	>900	>900	>900	>900					
	102.99	>900	>900	>900	>900	>900	>900	>900					
	121.42	>900	>900	>900	>900	>900							
	138.39	>900	>900		>900								
	145.67	>900	>900		>900								
	166.59	>900											
	195.24												

→ 144

m [kg]		CMP											
	s	63S	63M	63L	71S	71M	71L	80S	80M	80L	100S	100M	100L
R77	2	35	36	38	40	41	43	44	47	51	51	56	64
R77	3	36	37	39	41	42	44	46	48	52	52	57	65
RF: + 5.7 kg / RM: + 30.7 kg													

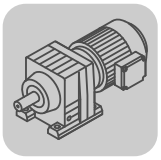

R..CMP
R..[mm]

CMP..	i	n_{epk} [1/min]	η [%]	c_{TG} R [Nm/']	RF [Nm/']	RM [Nm/']	φ /R [']
R77 2	5.31	4500	97	42	42	46	8
	5.99	4500	97	42	42	46	8
	6.79	4500	97	42	42	46	8
	7.74	4500	97	42	42	46	8
	8.59	4500	97	42	42	46	7
	9.64	4500	97	51	51	58	7
	10.88	4500	97	51	51	58	7
	12.33	4500	97	51	51	58	6
	14.05	4500	97	51	51	58	6
	15.60	4500	97	51	51	58	6
	17.82	4500	97	51	51	58	6
	18.80	4500	97	51	51	58	6
	21.43	4500	97	51	51	58	6
	23.37	4500	97	51	51	58	6
R77 3	25.23	4500	96	53	53	61	7
	29.00	4500	96	53	53	61	7
	33.47	4500	96	53	53	61	7
	36.83	4500	95	53	53	61	7
	43.26	4500	95	53	53	61	7
	45.81	4500	95	53	53	61	7
	52.07	4500	95	53	53	61	7
	57.68	4500	95	53	53	61	7
	65.77	4500	95	53	53	61	7
	77.24	4500	95	53	53	61	7
	81.80	4500	95	53	53	61	6
	92.97	4500	95	53	53	61	6
	102.99	4500	95	53	53	61	6
	121.42	4500	94	53	53	61	6
	138.39	4500	94	53	53	61	6
	145.67	4500	94	53	53	61	6
	166.59	4500	94	53	53	61	6
	195.24	4500	93	53	53	61	6

CMP..							F_{Ramax}			F_{Rapk}		
n_e = 1400	i	M_{amax} [Nm]	M_{apk} [Nm]	$M_{aNotaus}$ [Nm]	n_{ak} [1/min]	J_G 10^{-4} [kgm^2]	R [N]	RF [N]	RM [N]	R [N]	RF [N]	RM [N]
R77 2	5.31	510	765	867	264	7.7	3990	3990	12700	10400	10400	13000
	5.99	540	810	918	234	6.4	3990	3990	13000	10000	10000	13000
	6.79	580	840	986	206	5.2	3850	3850	13000	9730	9730	13000
	7.74	610	840	1037	181	4.2	3940	3940	13000	9730	9730	13000
	8.59	630	840	1071	175	3.7	4110	4110	13000	9730	9730	13000
	9.64	630	900	1071	145	6.6	6300	6300	13000	9110	9110	13000
	10.88	660	900	1122	129	5.5	6490	6490	13000	9110	9110	13000
	12.33	690	900	1173	114	4.5	6740	6740	13000	9110	9110	13000
	14.05	720	900	1224	100	3.7	7050	7050	13000	9110	9110	13000
	15.60	740	900	1258	90	3.3	7390	7390	13000	9110	9110	13000
	17.82	780	900	1326	79	2.7	7620	7620	13000	9110	9110	13000
	18.80	780	900	1326	74	2.5	7980	7980	13000	9110	9110	13000
	21.43	820	900	1394	65	2.0	8250	8250	13000	9110	9110	13000
	23.37	820	900	1394	64	1.7	8870	8870	13000	9110	9110	13000

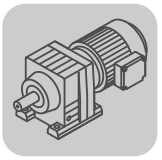

CMP..							F_{Ramax}			F_{Rapk}		
n_e = 1400	i	M_{amax} [Nm]	M_{apk} [Nm]	$M_{aNotaus}$ [Nm]	n_{ak} [1/min]	J_G 10^{-4} [kgm^2]	R [N]	RF [N]	RM [N]	R [N]	RF [N]	RM [N]
R77 3	25.23	780	900	1326	59	3.7	10100	10100	13000	9110	9110	13000
	29.00	820	900	1394	52	3.0	9920	9920	13000	9110	9110	13000
	33.47	820	900	1394	51	2.2	9920	9920	13000	9110	9110	13000
	36.83	820	900	1394	52	1.9	9920	9920	13000	9110	9110	13000
	43.26	820	900	1394	53	1.6	9920	9920	13000	9110	9110	13000
	45.81	820	900	1394	52	1.4	9920	9920	13000	9110	9110	13000
	52.07	820	900	1394	54	1.1	9920	9920	13000	9110	9110	13000
	57.68	820	900	1394	54	0.97	9920	9920	13000	9110	9110	13000
	65.77	820	900	1394	38	1.6	9920	9920	13000	9110	9110	13000
	77.24	820	900	1394	38	1.3	9920	9920	13000	9110	9110	13000
	81.80	820	900	1394	38	1.2	9920	9920	13000	9110	9110	13000
	92.97	820	900	1394	39	0.99	9920	9920	13000	9110	9110	13000
	102.99	820	900	1394	38	0.86	9920	9920	13000	9110	9110	13000
	121.42	820	900	1394	39	0.68	9920	9920	13000	9110	9110	13000
	138.39	820	900	1394	38	0.46	9920	9920	13000	9110	9110	13000
	145.67	820	900	1394	38	0.42	9920	9920	13000	9110	9110	13000
	166.59	820	900	1394	38	0.34	9920	9920	13000	9110	9110	13000
	195.24	820	900	1394	36	0.27	9920	9920	13000	9110	9110	13000

01 046 00 07

R77..

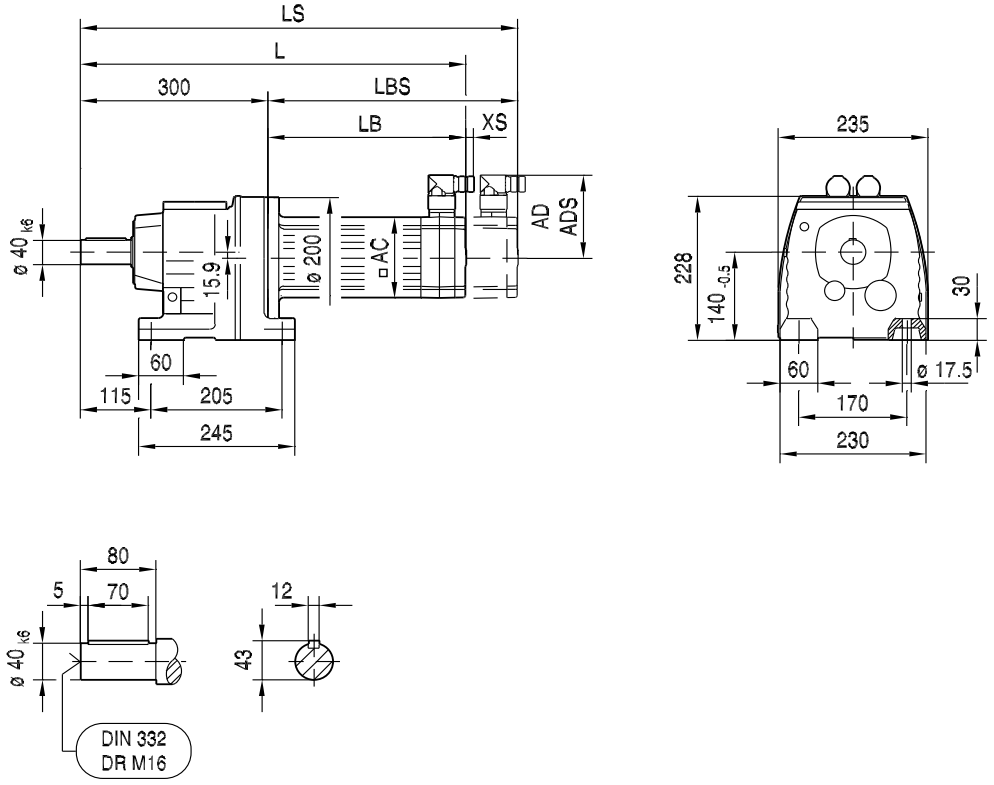

R77F..

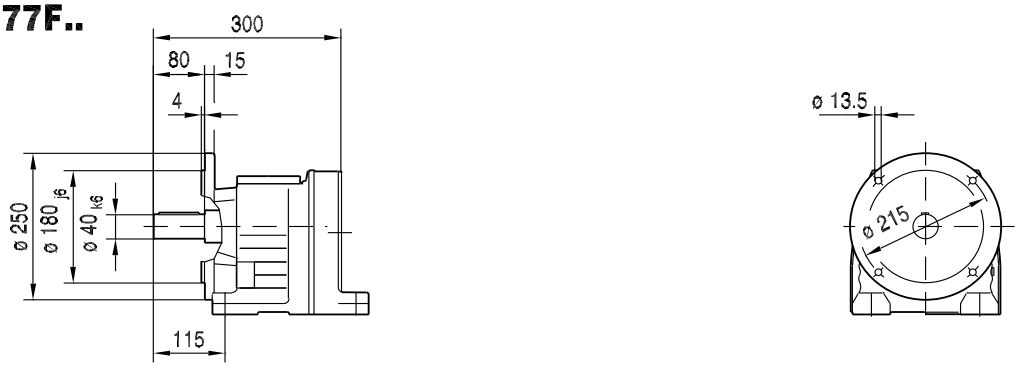

(→ 📖 144)	CMP63M	CMP63L	CMP71S	CMP71M	CMP71L	CMP80S	CMP80M	CMP80L	CMP100S	CMP100M	CMP100L
AC	88	88	115	115	115	137	137	137	162	162	162
AD	92	92	102	102	102	134	134	134	146	146	146
ADS	92	92	104	104	104	137	137	137	147	147	147
L	517	567	458	483	533	498	532	600	530	570	650
LS	546	596	523	548	598	576	610	678	626	666	746
LB	217	267	158	183	233	198	232	300	230	270	350
LBS	246	296	223	248	298	276	310	378	326	366	446
XS	14	14	11	11	11	37	37	37	37	37	37

01 047 00 07

RF77..

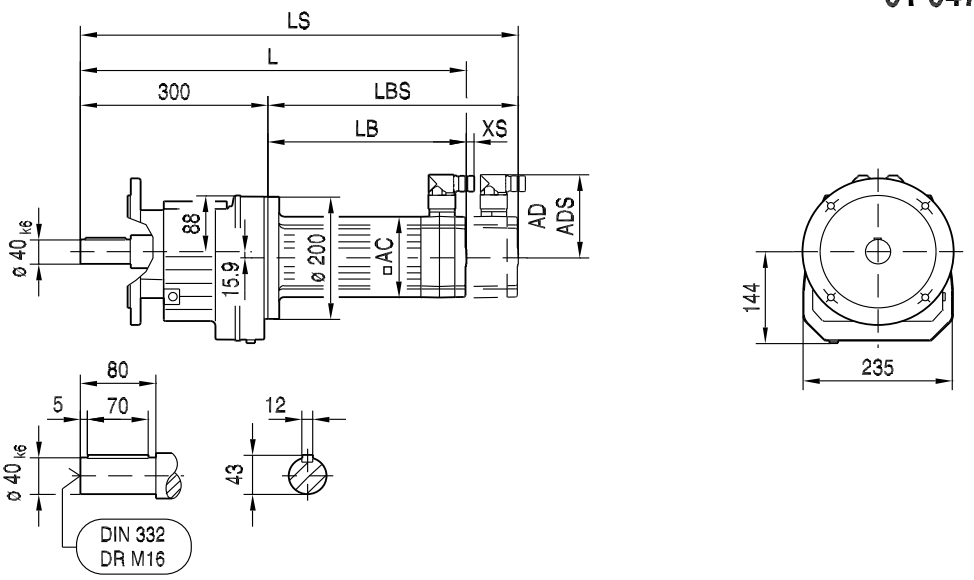

ø 250

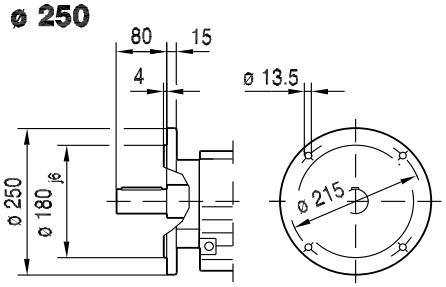

ø 300

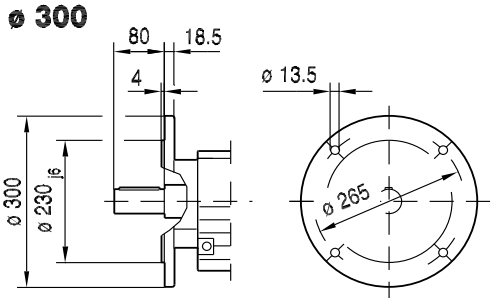

RM77..

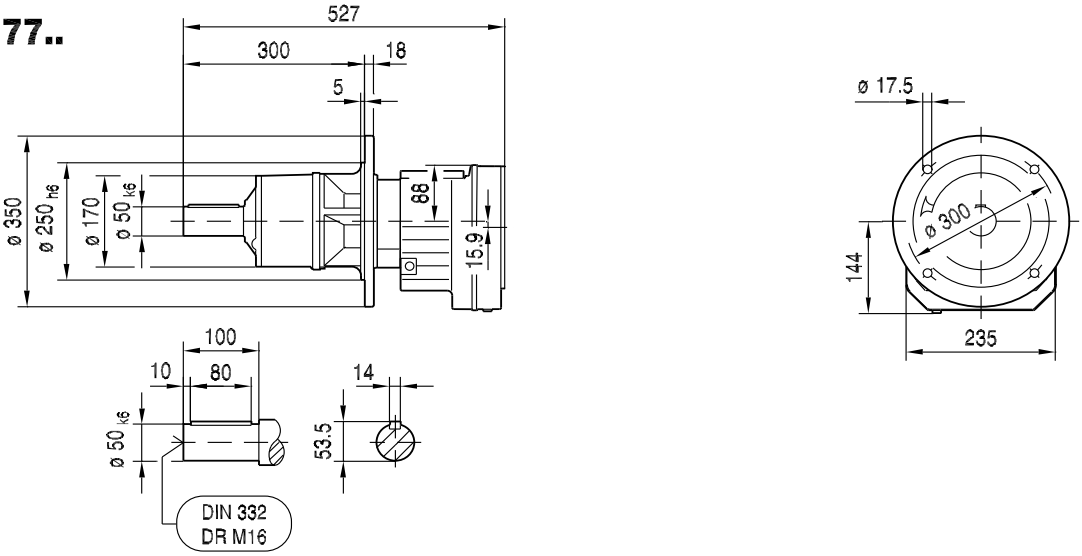

(→ 144)	CMP63M	CMP63L	CMP71S	CMP71M	CMP71L	CMP80S	CMP80M	CMP80L	CMP100S	CMP100M	CMP100L
AC	88	88	115	115	115	137	137	137	162	162	162
AD	92	92	102	102	102	134	134	134	146	146	146
ADS	92	92	104	104	104	137	137	137	147	147	147
L	517	567	458	483	533	498	532	600	530	570	650
LS	546	596	523	548	598	576	610	678	626	666	746
LB	217	267	158	183	233	198	232	300	230	270	350
LBS	246	296	223	248	298	276	310	378	326	366	446
XS	14	14	11	11	11	37	37	37	37	37	37

01 048 00 07

RZ77..

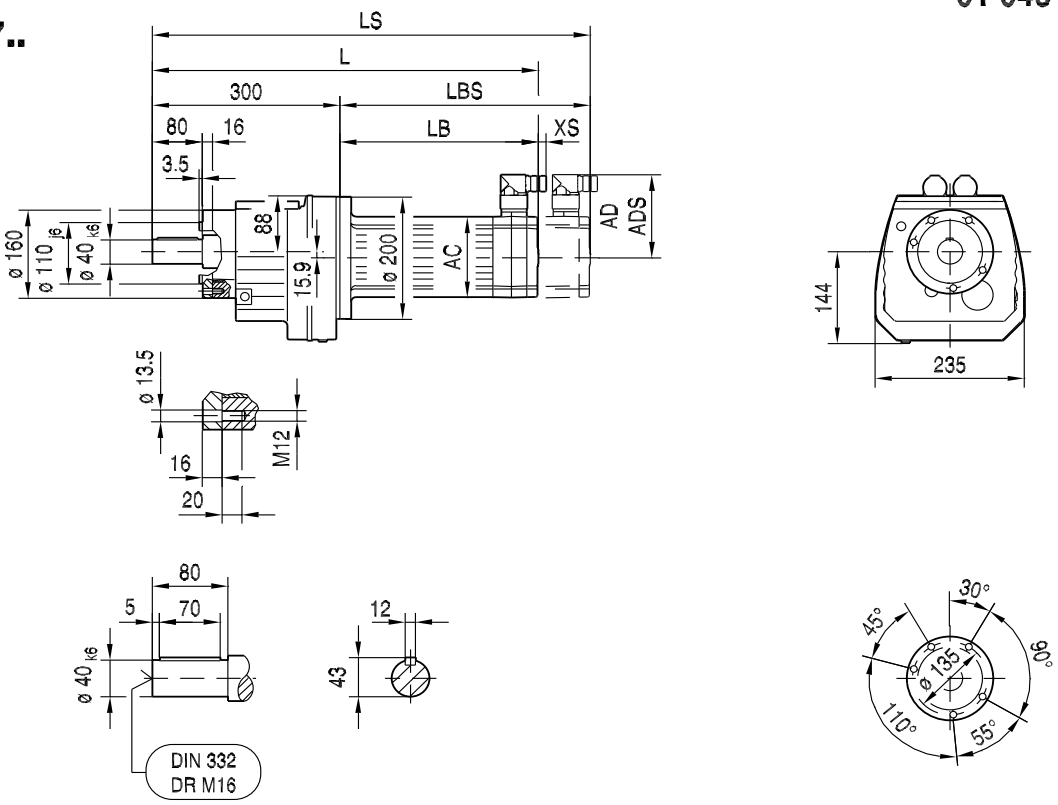

(→ 144)	CMP63M	CMP63L	CMP71S	CMP71M	CMP71L	CMP80S	CMP80M	CMP80L	CMP100S	CMP100M	CMP100L
AC	88	88	115	115	115	137	137	137	162	162	162
AD	92	92	102	102	102	134	134	134	146	146	146
ADS	92	92	104	104	104	137	137	137	147	147	147
L	517	567	458	483	533	498	532	600	530	570	650
LS	546	596	523	548	598	576	610	678	626	666	746
LB	217	267	158	183	233	198	232	300	230	270	350
LBS	246	296	223	248	298	276	310	378	326	366	446
XS	14	14	11	11	11	37	37	37	37	37	37

8.3.9 R 87

M_{aDyn} [Nm]	i	CMP 71S	71M	71L	80S	80M	80L	100S	100M	100L
R87 2	5.30		158	240	215	320	550	350	555	910
	6.39		191	290	260	385	660	420	665	1100
	7.13	133	210	320	290	430	740	470	745	1230
	8.22	153	245	370	335	495	850	540	860	>1270
	9.14	170	270	415	370	550	940	605	950	>1270
	9.90		295	450	400	600	1020	655	1030	>1550
	11.93		355	540	485	720	1230	790	1240	>1550
	13.33	245	395	605	540	800	1380	880	1390	>1550
	15.35	285	455	695	625	930	>1550	1010	>1550	>1550
	17.08	315	510	775	695	1030	>1550	1130	>1550	>1550
	19.10	355	570	860	775	1150	>1550	1260	>1550	>1550
	21.51	400	640	970	870	1300	>1550	1420	>1550	>1550
	23.40	435	695	1060	950	1420		>1550		
	27.84	515	830	1260	1130	>1550		>1550		
	31.40	580	930	1420	1280					
	34.40	640	1020	>1550	1400					
R87 3	27.88	510	820	1250	1120	>1550	>1550	>1550	>1550	>1550
	32.66	600	960	1470	1310	>1550	>1550	>1550	>1550	>1550
	36.84	675	1080	>1550	1480	>1550	>1550	>1550	>1550	>1550
	41.74	765	1230	>1550	>1550	>1550	>1550	>1550	>1550	>1550
	47.58	870	1400	>1550	>1550	>1550	>1550	>1550	>1550	>1550
	52.82	970	>1550	>1550	>1550	>1550		>1550		
	60.35	1110	>1550	>1550	>1550	>1550		>1550		
	63.68	1170	>1550	>1550	>1550	>1550		>1550		
	72.57	1330	>1550	>1550	>1550					
	81.92	1490	>1550	>1550	>1550	>1550	>1550	>1550	>1550	>1550
	93.38	>1550	>1550	>1550	>1550	>1550	>1550	>1550	>1550	>1550
	103.65	>1550	>1550	>1550	>1550	>1550		>1550		
	118.43	>1550	>1550	>1550	>1550	>1550		>1550		
	124.97	>1550	>1550	>1550	>1550	>1550		>1550		
	142.41	>1550	>1550	>1550	>1550					
	155.34	>1550	>1550	>1550	>1550					
	181.77	>1550	>1550							
	205.71	>1550								
	216.54	>1550								
	246.54									

→ 144

m [kg]	s	CMP 71S	71M	71L	80S	80M	80L	100S	100M	100L
R87	2	66	67	70	73	75	79	77	81	90
R87	3	68	69	71	74	76	80	78	82	91
RF: + 7.1 kg / RM: + 36.8 kg										

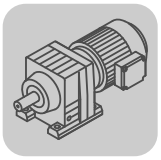

R..CMP
R..[mm]

CMP..	i	n_{epk} [1/min]	η [%]	c_{TG} R [Nm/']	c_{TG} RF [Nm/']	c_{TG} RM [Nm/']	φ /R [']
R87 2	5.30	4500	97	76	76	78	7
	6.39	4500	97	76	76	78	7
	7.13	4500	97	76	76	78	7
	8.22	4500	97	76	76	78	7
	9.14	4500	97	76	76	78	6
	9.90	4500	97	93	93	96	6
	11.93	4500	97	93	93	96	6
	13.33	4500	97	93	93	96	6
	15.35	4500	97	93	93	96	6
	17.08	4500	97	93	93	96	6
	19.10	4500	97	93	93	96	6
	21.51	4500	97	93	93	96	6
	23.40	4500	97	93	93	96	6
	27.84	4500	97	93	93	96	6
	31.40	4500	97	93	93	96	5
	34.40	4500	97	93	93	96	5
R87 3	27.88	4500	96	97	97	99	7
	32.66	4500	96	97	97	99	7
	36.84	4500	96	97	97	99	7
	41.74	4500	96	97	97	99	7
	47.58	4500	96	97	97	99	7
	52.82	4500	96	97	97	99	6
	60.35	4500	96	97	97	99	6
	63.68	4500	96	97	97	99	6
	72.57	4500	96	97	97	99	6
	81.92	4500	95	97	97	100	6
	93.38	4500	95	97	97	100	6
	103.65	4500	95	97	97	100	6
	118.43	4500	95	97	97	100	6
	124.97	4500	95	97	97	100	6
	142.41	4500	95	97	97	100	6
	155.34	4500	94	97	97	100	6
	181.77	4500	94	97	97	100	6
	205.71	4500	94	97	97	100	6
	216.54	4500	94	97	97	100	6
	246.54	4500	93	97	97	100	6

CMP.. n_e = 1400	i	M_{amax} [Nm]	M_{apk} [Nm]	$M_{aNotaus}$ [Nm]	n_{ak} [1/min]	J_G 10^{-4} [kgm^2]	F_{Ramax} R [N]	F_{Ramax} RF [N]	F_{Ramax} RM [N]	F_{Rapk} R [N]	F_{Rapk} RF [N]	F_{Rapk} RM [N]
R87 2	5.30	910	1270	1547	264	25	8980	8980	16600	18600	18600	20000
	6.39	1020	1270	1734	219	19	9450	9450	17700	18600	18600	20000
	7.13	1070	1270	1819	196	16	9780	9780	18300	18600	18600	20000
	8.22	1160	1270	1972	170	13	10200	10200	19200	18600	18600	20000
	9.14	1210	1270	2057	153	11	10500	10500	19800	18600	18600	20000
	9.90	1180	1550	2006	141	21	10400	10400	20000	16900	16900	20000
	11.93	1230	1550	2091	117	17	11200	11200	20000	16900	16900	20000
	13.33	1280	1550	2176	105	14	11600	11600	20000	16900	16900	20000
	15.35	1340	1550	2278	91	12	12100	12100	20000	16900	16900	20000
	17.08	1390	1550	2363	82	10	12600	12600	19900	16900	16900	20000
	19.10	1440	1550	2448	79	8.7	13000	13000	19900	16900	16900	20000
	21.51	1500	1550	2550	70	7.3	13600	13600	19800	16900	16900	20000
	23.40	1550	1550	2635	60	6.6	13900	13900	19700	16900	16900	20000
	27.84	1550	1550	2635	61	5.1	15000	15000	19700	16900	16900	20000
	31.40	1550	1550	2635	61	4.1	7820	7820	19700	16900	16900	20000
	34.40	1500	1550	2550	70	3.6	9480	9480	19800	16900	16900	20000

CMP..							F_{Ramax}			F_{Rapk}		
n_e = 1400	i	M_{amax} [Nm]	M_{apk} [Nm]	$M_{aNotaus}$ [Nm]	n_{ak} [1/min]	J_G 10^{-4} [kgm^2]	R [N]	RF [N]	RM [N]	R [N]	RF [N]	RM [N]
R87 3	27.88	1500	1550	2550	54	9.8	15100	15100	19800	16900	16900	20000
	32.66	1550	1550	2635	49	7.6	16000	16000	19700	16900	16900	20000
	36.84	1550	1550	2635	49	6.2	16800	16800	19700	16900	16900	20000
	41.74	1550	1550	2635	50	5.1	16900	16900	19700	16900	16900	20000
	47.58	1550	1550	2635	50	4.1	16900	16900	19700	16900	16900	20000
	52.82	1550	1550	2635	51	3.6	13500	13500	19700	16900	16900	20000
	60.35	1550	1550	2635	51	2.9	15200	15200	19700	16900	16900	20000
	63.68	1550	1550	2635	50	2.7	15800	15800	19700	16900	16900	20000
	72.57	1550	1550	2635	51	2.2	16900	16900	19700	16900	16900	20000
	81.92	1550	1550	2635	51	4.0	16900	16900	19700	16900	16900	20000
	93.38	1550	1550	2635	51	3.3	16900	16900	19700	16900	16900	20000
	103.65	1550	1550	2635	52	3.0	16900	16900	19700	16900	16900	20000
	118.43	1550	1550	2635	52	2.4	16900	16900	19700	16900	16900	20000
	124.97	1550	1550	2635	52	2.3	16900	16900	19700	16900	16900	20000
	142.41	1550	1550	2635	49	1.9	16900	16900	19700	16900	16900	20000
	155.34	1550	1550	2635	45	1.6	16900	16900	19700	16900	16900	20000
	181.77	1550	1550	2635	39	1.3	16900	16900	19700	16900	16900	20000
	205.71	1550	1550	2635	34	0.90	16900	16900	19700	16900	16900	20000
	216.54	1550	1550	2635	32	0.81	16900	16900	19700	16900	16900	20000
	246.54	1550	1550	2635	28	0.66	16900	16900	19700	16900	16900	20000

01 049 00 07

R87..

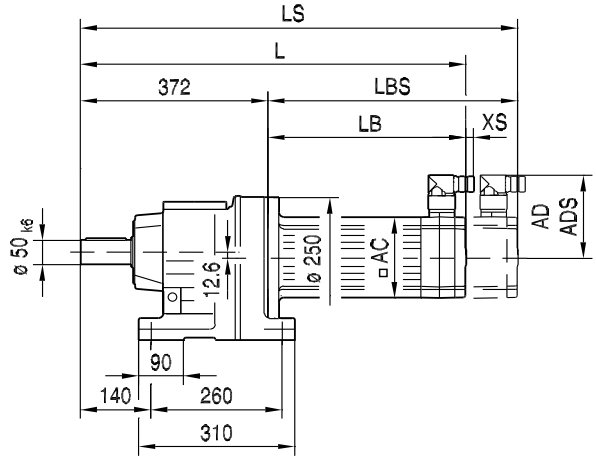

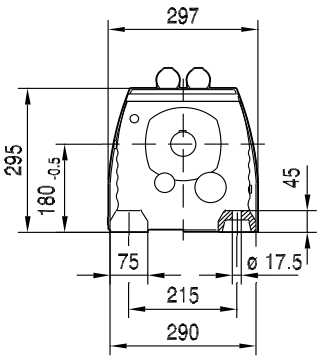

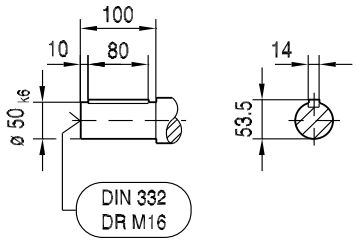

R87F..

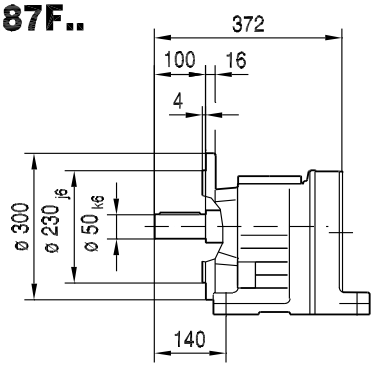

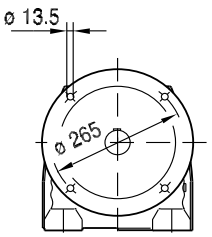

(→ 📖 144)	CMP71S	CMP71M	CMP71L	CMP80S	CMP80M	CMP80L	CMP100S	CMP100M	CMP100L
AC	115	115	115	137	137	137	162	162	162
AD	102	102	102	134	134	134	146	146	146
ADS	104	104	104	137	137	137	147	147	147
L	526	551	601	565	599	667	597	637	717
LS	591	616	666	643	677	745	693	733	813
LB	154	179	229	193	227	295	225	265	345
LBS	219	244	294	271	305	373	321	361	441
XS	11	11	11	37	37	37	37	37	37

01 050 00 07

RF87..

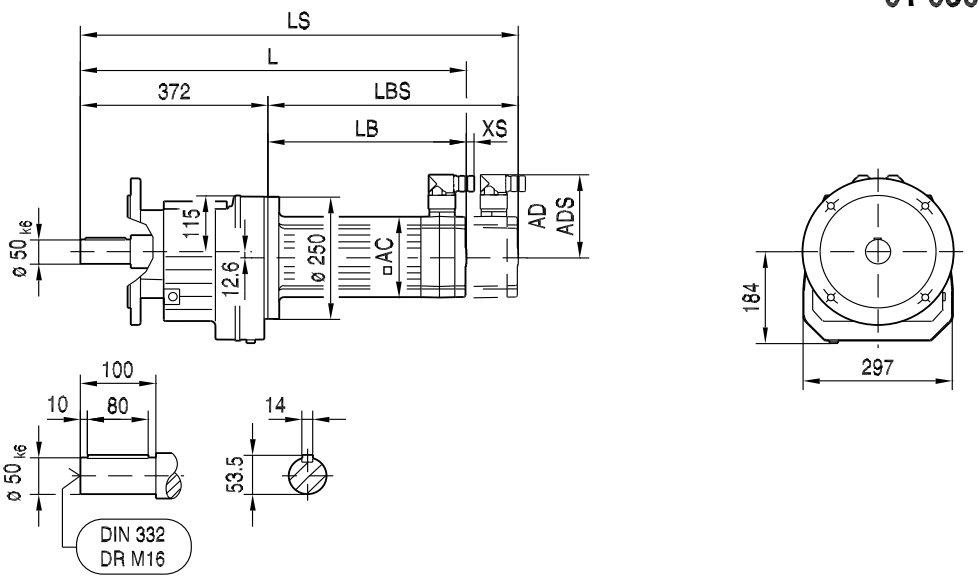

ø 300

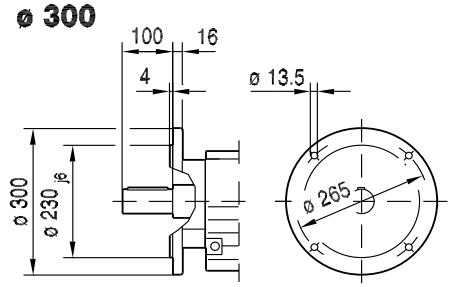

ø 350

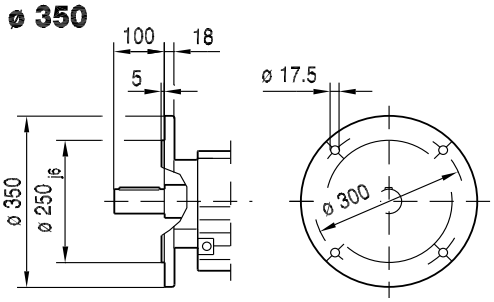

RM87..

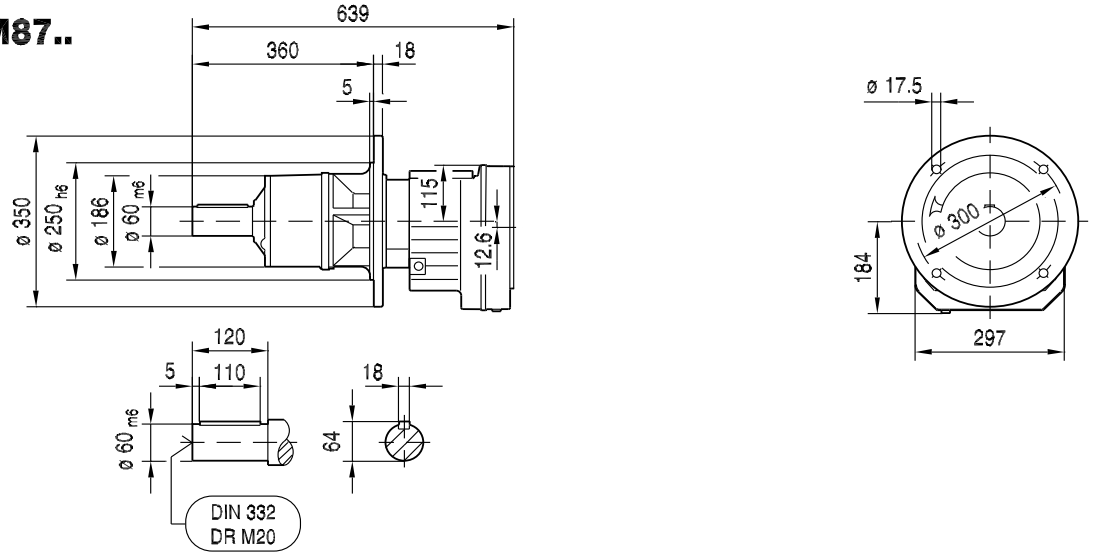

(→ 144)	CMP71S	CMP71M	CMP71L	CMP80S	CMP80M	CMP80L	CMP100S	CMP100M	CMP100L
AC	115	115	115	137	137	137	162	162	162
AD	102	102	102	134	134	134	146	146	146
ADS	104	104	104	137	137	137	147	147	147
L	526	551	601	565	599	667	597	637	717
LS	591	616	666	643	677	745	693	733	813
LB	154	179	229	193	227	295	225	265	345
LBS	219	244	294	271	305	373	321	361	441
XS	11	11	11	37	37	37	37	37	37

01 051 00 07

RZ87..

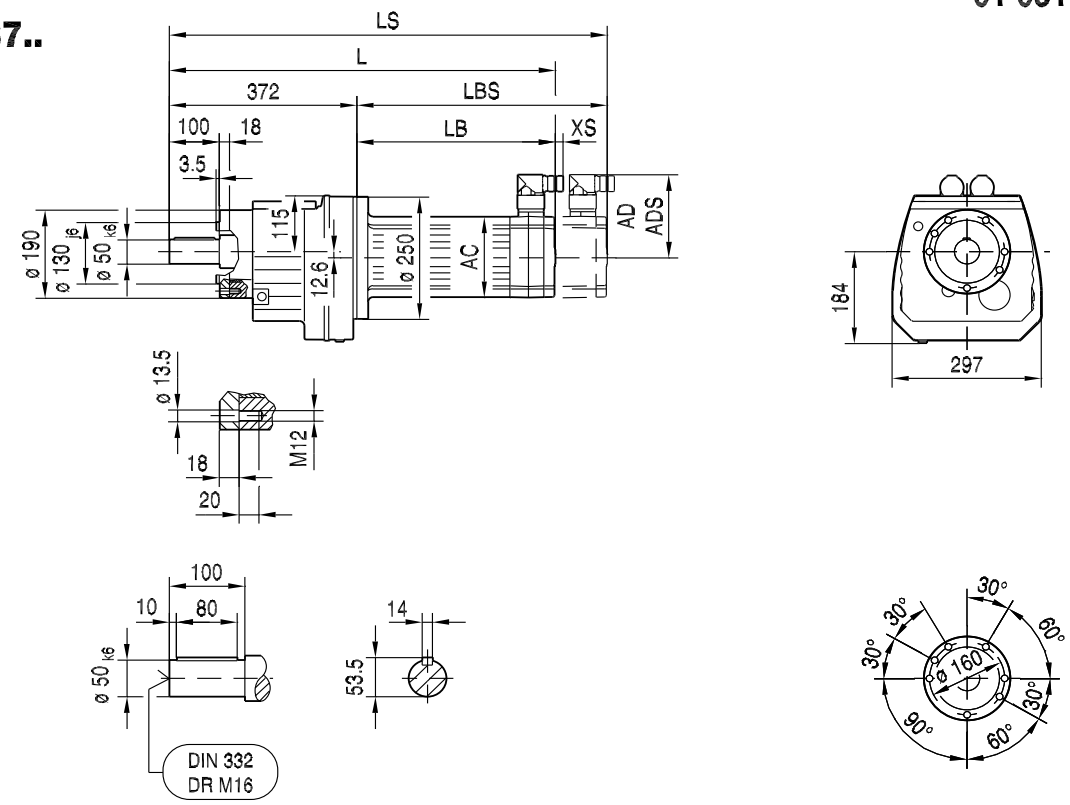

(→ 📖 144)	CMP71S	CMP71M	CMP71L	CMP80S	CMP80M	CMP80L	CMP100S	CMP100M	CMP100L
AC	115	115	115	137	137	137	162	162	162
AD	102	102	102	134	134	134	146	146	146
ADS	104	104	104	137	137	137	147	147	147
L	526	551	601	565	599	667	597	637	717
LS	591	616	666	643	677	745	693	733	813
LB	154	179	229	193	227	295	225	265	345
LBS	219	244	294	271	305	373	321	361	441
XS	11	11	11	37	37	37	37	37	37

8.3.10 R 97

M_{aDyn} [Nm]		CMP					
	i	80S	80M	80L	100S	100M	100L
R97 2	4.50		270	465	295	470	780
	5.20		315	535	340	540	900
	6.21		375	640	410	650	1070
	7.12	290	430	735	470	745	1230
	8.39	340	505	870	555	870	1450
	9.29	375	560	960	615	970	1610
	10.83		655	1120	715	1130	1870
	12.39	505	750	1280	820	1290	2140
	14.62	595	880	1510	960	1530	2530
	16.17	660	980	1670	1070	1690	2800
	18.24	740	1100	1890	1200	1910	>3090
	20.14	820	1220	2090	1330	2100	>3090
	22.37	910	1350	2320	1480	2340	>3090
	25.03	1020	1510	2590	1650	2620	>3090
	27.19	1110	1650		1800		
	32.05	1300	1940		2120		
R97 3	27.58	1110	1650	2830	1800	2850	>3090
	33.25	1340	1990	>3090	2180	>3090	>3090
	37.13	1500	2230	>3090	2430	>3090	>3090
	42.78	1720	2570	>3090	2800	>3090	>3090
	47.58	1920	2850	>3090	>3090	>3090	>3090
	53.21	2150	>3090	>3090	>3090	>3090	>3090
	59.92	2420	>3090	>3090	>3090	>3090	>3090
	65.21	2630	>3090		>3090		
	72.17	2880	>3090	>3090	>3090	>3090	>3090
	83.15	>3090	>3090	>3090	>3090	>3090	>3090
	92.48	>3090	>3090	>3090	>3090	>3090	>3090
	103.44	>3090	>3090	>3090	>3090	>3090	>3090
	116.48	>3090	>3090	>3090	>3090	>3090	>3090
	126.75	>3090	>3090		>3090		
	150.78	>3090	>3090		>3090		
	170.02	>3090					
	186.30	>3090					
	216.28						
	241.25						
	255.71						
	289.74						

→ 144

m [kg]		CMP					
	s	80S	80M	80L	100S	100M	100L
R97	2	110	115	120	120	125	135
R97	3	115	115	120	125	125	135
RF: + 17.2 kg / RM: + 68.5 kg							

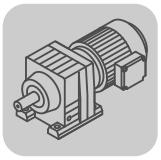

R..CMP
R..[mm]

CMP..	i	n_{epk} [1/min]	η [%]	c_{TG} R [Nm/']	c_{TG} RF [Nm/']	c_{TG} RM [Nm/']	φ /R [']
R97 2	4.50	3597	97	127	127	112	6
	5.20	3924	97	127	127	112	6
	6.21	4378	97	127	127	112	6
	7.12	4500	97	127	127	112	6
	8.39	4500	97	127	127	112	6
	9.29	4500	97	127	127	112	6
	10.83	4500	97	155	155	132	6
	12.39	4500	97	155	155	132	6
	14.62	4500	97	155	155	132	6
	16.17	4500	97	155	155	132	6
	18.24	4500	97	155	155	132	6
	20.14	4500	97	155	155	132	5
	22.37	4500	97	155	155	132	5
	25.03	4500	97	155	155	132	5
	27.19	4500	97	155	155	132	5
	32.05	4500	97	155	155	132	5
R97 3	27.58	4500	96	163	163	138	6
	33.25	4500	96	163	163	138	6
	37.13	4500	96	163	163	138	6
	42.78	4500	96	163	163	138	6
	47.58	4500	96	163	163	138	6
	53.21	4500	96	163	163	138	6
	59.92	4500	96	163	163	138	6
	65.21	4500	96	163	163	138	6
	72.17	4500	95	164	164	139	6
	83.15	4500	95	164	164	139	6
	92.48	4500	95	164	164	139	6
	103.44	4500	95	164	164	139	6
	116.48	4500	95	164	164	139	6
	126.75	4500	95	164	164	139	6
	150.78	4500	95	164	164	139	6
	170.02	4500	95	164	164	139	6
	186.30	4500	95	164	164	139	6
	216.28	4500	94	164	164	139	6
	241.25	4500	94	164	164	139	6
	255.71	4500	94	164	164	139	6
	289.74	4500	93	164	164	139	6

CMP..							F_{Ramax}			F_{Rapk}		
n_e = 1400	i	M_{amax} [Nm]	M_{apk} [Nm]	$M_{aNotaus}$ [Nm]	n_{ak} [1/min]	J_G 10^{-4} [kgm^2]	R [N]	RF [N]	RM [N]	R [N]	RF [N]	RM [N]
R97 2	4.50	1630	2445	2771	244	80	9500	9500	17900	24400	24400	26300
	5.20	1780	2560	3026	192	65	9850	9850	18700	23800	23800	26100
	6.21	1890	2560	3213	161	51	10500	10500	19900	23800	23800	26100
	7.12	2000	2560	3400	140	41	10900	10900	20800	23800	23800	26100
	8.39	2030	2560	3451	131	33	11700	11700	22000	23800	23800	26100
	9.29	2030	2560	3451	129	28	12200	12200	22800	23800	23800	26100
	10.83	2090	3090	3553	129	46	12100	12100	23700	16000	16000	24500
	12.39	2190	3090	3723	113	37	12700	12700	24800	16000	16000	24500
	14.62	2300	3090	3910	103	30	13400	13400	26200	16000	16000	24500
	16.17	2400	3090	4080	87	26	13800	13800	26200	16000	16000	24500
	18.24	2500	3090	4250	77	22	14400	14400	26100	16000	16000	24500
	20.14	2610	3090	4437	70	19	14800	14800	26000	16000	16000	24500
	22.37	2720	3090	4624	63	16	15300	15300	25800	16000	16000	24500
	25.03	2830	3090	4811	56	14	15900	15900	25700	16000	16000	24500
	27.19	2560	3090	4352	74	13	8380	8380	26000	16000	16000	24500
	32.05	2560	3090	4352	75	9.8	10600	10600	26000	16000	16000	24500

CMP..							F_{Ramax}			F_{Rapk}		
n_e = 1400	i	M_{amax} [Nm]	M_{apk} [Nm]	$M_{aNotaus}$ [Nm]	n_{ak} [1/min]	J_G 10^{-4} [kgm^2]	R [N]	RF [N]	RM [N]	R [N]	RF [N]	RM [N]
	27.58	2670	3090	4539	54	24	16900	16900	25900	16000	16000	24500
	33.25	2890	3090	4913	45	19	17900	17900	25600	16000	16000	24500
	37.13	3000	3090	5100	40	16	18600	18600	25400	16000	16000	24500
	42.78	3000	3090	5100	37	13	19800	19800	25400	16000	16000	24500
	47.58	3000	3090	5100	38	11	19800	19800	25400	16000	16000	24500
	53.21	3000	3090	5100	39	9.5	19800	19800	25400	16000	16000	24500
	59.92	3000	3090	5100	40	8.0	19800	19800	25400	16000	16000	24500
	65.21	3000	3090	5100	40	7.1	19800	19800	25400	16000	16000	24500
	72.17	3000	3090	5100	35	14	18000	18000	25400	16000	16000	24500
R97	83.15	3000	3090	5100	35	11	19800	19800	25400	16000	16000	24500
3	92.48	3000	3090	5100	35	9.8	19800	19800	25400	16000	16000	24500
	103.44	3000	3090	5100	35	8.4	19800	19800	25400	16000	16000	24500
	116.48	3000	3090	5100	35	7.0	19800	19800	25400	16000	16000	24500
	126.75	3000	3090	5100	36	6.3	19800	19800	25400	16000	16000	24500
	150.78	3000	3090	5100	35	4.9	19800	19800	25400	16000	16000	24500
	170.02	3000	3090	5100	35	4.0	19800	19800	25400	16000	16000	24500
	186.30	3000	3090	5100	35	3.5	19800	19800	25400	16000	16000	24500
	216.28	3000	3090	5100	32	2.8	19800	19800	25400	16000	16000	24500
	241.25	3000	3090	5100	29	1.8	19800	19800	25400	16000	16000	24500
	255.71	3000	3090	5100	27	1.6	19800	19800	25400	16000	16000	24500
	289.74	3000	3090	5100	24	1.3	19800	19800	25400	16000	16000	24500

01 052 00 07

R97..

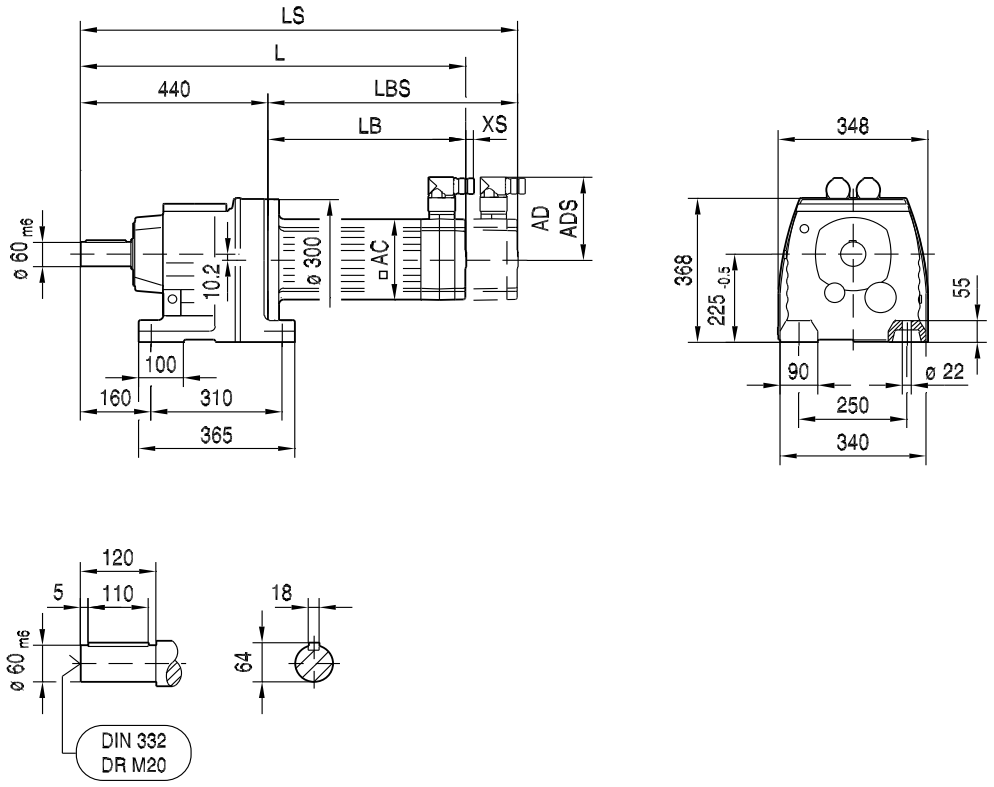

(→ 📖 144)	CMP80S	CMP80M	CMP80L	CMP100S	CMP100M	CMP100L		
AC	137	137	137	162	162	162		
AD	134	134	134	146	146	146		
ADS	137	137	137	147	147	147		
L	627	661	729	660	700	780		
LS	705	739	807	756	796	876		
LB	187	221	289	220	260	340		
LBS	265	299	367	316	356	436		
XS	37	37	37	37	37	37		

01 053 00 07

RF97..

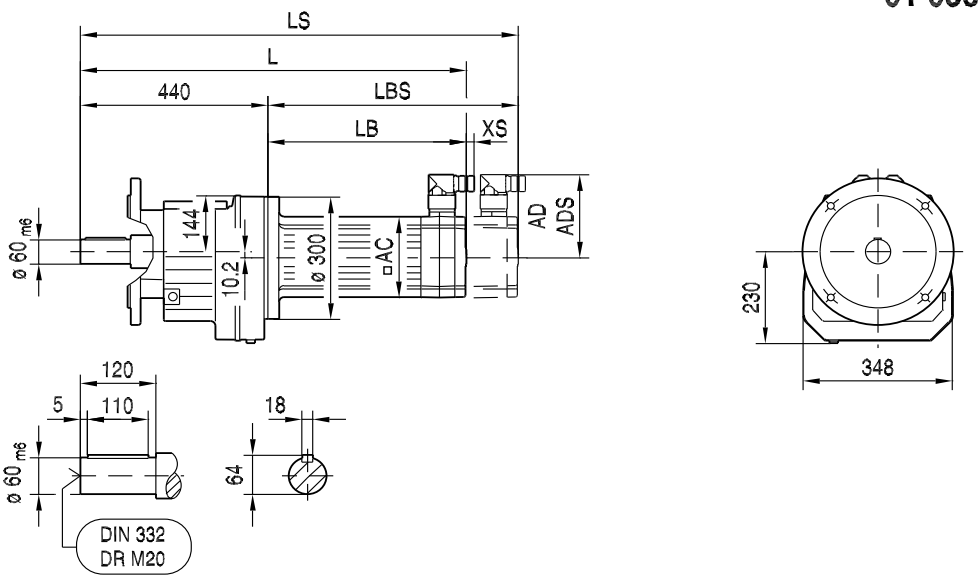

ø 350

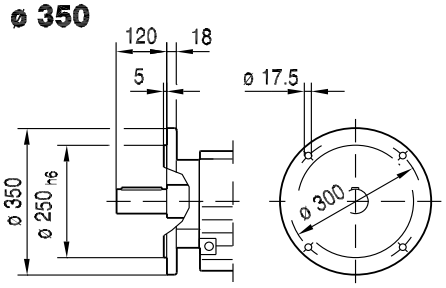

ø 450

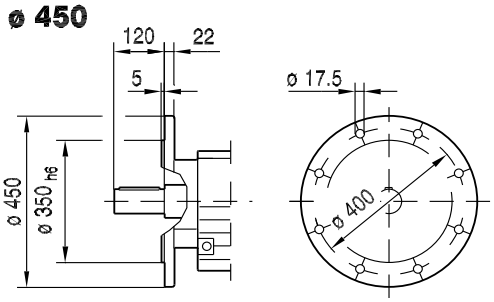

RM97..

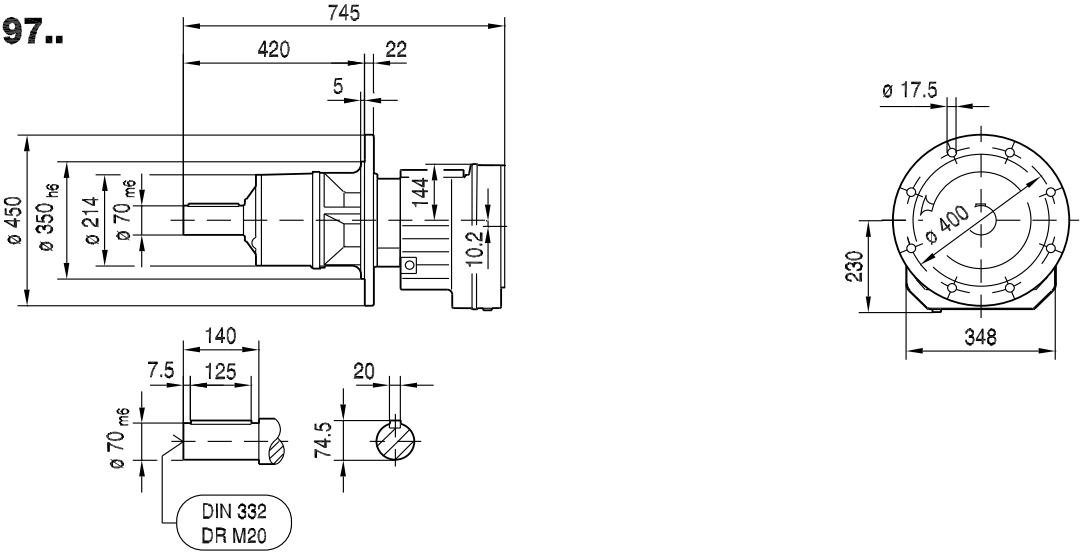

(→ 📖 144)	CMP80S	CMP80M	CMP80L	CMP100S	CMP100M	CMP100L		
AC	137	137	137	162	162	162		
AD	134	134	134	146	146	146		
ADS	137	137	137	147	147	147		
L	627	661	729	660	700	780		
LS	705	739	807	756	796	876		
LB	187	221	289	220	260	340		
LBS	265	299	367	316	356	436		
XS	37	37	37	37	37	37		

8.3.11 R 107

M_{aDyn} [Nm]		CMP		
	i	100S	100M	100L
R107 2	4.92		515	850
	5.82	385	605	1000
	6.66	440	695	1150
	7.86	520	820	1360
	8.56		890	1480
	10.13	670	1060	1750
	11.59	765	1210	2010
	13.66	900	1430	2360
	15.65	1030	1630	2710
	18.21	1200	1900	3150
	20.07	1320	2100	3480
	22.62	1490	2360	3920
	24.90	1640	2600	4310
	27.58	1820	2880	>4360
	30.77	2030	3220	>4360
R107 3	29.49	1910	3020	>4360
	35.26	2310	3650	>4360
	40.37	2640	4180	>4360
	47.63	3120	>4360	>4360
	52.68	3450	>4360	>4360
	59.41	3890	>4360	>4360
	65.60	4300	>4360	>4360
	72.88	>4360	>4360	>4360
	78.57	>4360	>4360	>4360
	92.70	>4360	>4360	>4360
	102.53	>4360	>4360	>4360
	115.63	>4360	>4360	>4360
	127.68	>4360	>4360	>4360
	141.83	>4360	>4360	>4360
	158.68	>4360	>4360	>4360
	172.34	>4360		
	203.16	>4360		
	229.95			
	251.15			

→ 📖 144

m [kg]		CMP		
	s	100S	100M	100L
R107	2	175	180	185
R107	3	180	185	195
RF: + 6.0 kg / RM: + 94.0 kg				

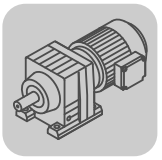

CMP..	i	n_{epk} [1/min]	η [%]	c_{TG} R [Nm/']	c_{TG} RF [Nm/']	c_{TG} RM [Nm/']	φ /R [']
R107 2	4.92	3197	97	208	208	175	9
	5.82	3597	97	208	208	175	9
	6.66	3924	97	208	208	175	9
	7.86	4378	97	208	208	175	9
	8.56	4500	97	250	250	203	7
	10.13	4500	97	250	250	203	7
	11.59	4500	97	250	250	203	7
	13.66	4500	97	250	250	203	7
	15.65	4500	97	250	250	203	7
	18.21	4500	97	250	250	203	7
	20.07	4500	97	250	250	203	7
	22.62	4500	97	250	250	203	7
	24.90	4500	97	250	250	203	7
	27.58	4500	97	250	250	203	7
	30.77	4500	97	250	250	203	7
R107 3	29.49	4500	95	259	259	210	7
	35.26	4500	96	259	259	210	7
	40.37	4500	96	259	259	210	7
	47.63	4500	96	259	259	210	7
	52.68	4500	96	259	259	210	7
	59.41	4500	96	259	259	210	7
	65.60	4500	96	259	259	210	7
	72.88	4500	96	259	259	210	7
	78.57	4500	95	260	260	210	7
	92.70	4500	95	260	260	210	7
	102.53	4500	95	260	260	210	7
	115.63	4500	95	260	260	210	7
	127.68	4500	95	260	260	210	7
	141.83	4500	95	260	260	210	7
	158.68	4500	95	260	260	210	7
	172.34	4500	95	260	260	210	7
	203.16	4500	94	260	260	210	7
	229.95	4500	94	260	260	210	7
	251.15	4500	94	260	260	210	7

CMP..							F_{Ramax}			F_{Rapk}		
n_e = 1400	i	M_{amax} [Nm]	M_{apk} [Nm]	$M_{aNotaus}$ [Nm]	n_{ak} [1/min]	J_G 10^{-4} [kgm^2]	R [N]	RF [N]	RM [N]	R [N]	RF [N]	RM [N]
R107 2	4.92	2900	3820	4930	467	144	11300	11300	21100	31800	31800	33500
	5.82	2970	3820	5049	515	108	12100	12100	22400	31800	31800	33500
	6.66	2970	3820	5049	586	88	12800	12800	23500	31800	31800	33500
	7.86	2970	3820	5049	700	70	13800	13800	24900	31800	31800	33500
	8.56	4300	4360	7310	245	129	11300	11300	24400	29100	29100	32100
	10.13	4300	4360	7310	237	97	12400	12400	26000	29100	29100	32100
	11.59	4300	4360	7310	242	80	13300	13300	27300	29100	29100	32100
	13.66	4300	4360	7310	242	64	14400	14400	29000	29100	29100	32100
	15.65	4300	4360	7310	236	52	15400	15400	30500	29100	29100	32100
	18.21	4300	4360	7310	236	43	16600	16600	32300	29100	29100	32100
	20.07	4300	4360	7310	234	37	17300	17300	32800	29100	29100	32100
	22.62	4300	4360	7310	234	31	18300	18300	32800	29100	29100	32100
	24.90	4300	4360	7310	237	27	19200	19200	32800	29100	29100	32100
	27.58	4300	4360	7310	232	21	20100	20100	32800	29100	29100	32100
	30.77	4300	4360	7310	227	18	21100	21100	32800	29100	29100	32100

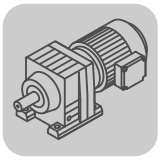

R..CMP
R..[mm]

CMP..							F_{Ramax}			F_{Rapk}		
n_e = 1400	i	M_{amax} [Nm]	M_{apk} [Nm]	$M_{aNotaus}$ [Nm]	n_{ak} [1/min]	J_G 10^{-4} [kgm^2]	R [N]	RF [N]	RM [N]	R [N]	RF [N]	RM [N]
R107 3	29.49	4300	4360	7310	85	60	20700	20700	32800	29100	29100	32100
	35.26	4300	4360	7310	88	47	22400	22400	32800	29100	29100	32100
	40.37	4300	4360	7310	87	38	23800	23800	32800	29100	29100	32100
	47.63	4300	4360	7310	88	31	25500	25500	32800	29100	29100	32100
	52.68	4300	4360	7310	89	27	26600	26600	32800	29100	29100	32100
	59.41	4300	4360	7310	89	22	28000	28000	32800	29100	29100	32100
	65.60	4300	4360	7310	90	19	29200	29200	32800	29100	29100	32100
	72.88	4300	4360	7310	89	17	29500	29500	32800	29100	29100	32100
	78.57	4300	4360	7310	46	34	29500	29500	32800	29100	29100	32100
	92.70	4300	4360	7310	47	28	29500	29500	32800	29100	29100	32100
	102.53	4300	4360	7310	48	25	29500	29500	32800	29100	29100	32100
	115.63	4300	4360	7310	48	20	29500	29500	32800	29100	29100	32100
	127.68	4300	4360	7310	49	18	29500	29500	32800	29100	29100	32100
	141.83	4300	4360	7310	49	15	29500	29500	32800	29100	29100	32100
	158.68	4300	4360	7310	44	13	29500	29500	32800	29100	29100	32100
	172.34	4300	4360	7310	41	12	29500	29500	32800	29100	29100	32100
	203.16	4300	4360	7310	34	9.2	29500	29500	32800	29100	29100	32100
	229.95	4300	4360	7310	30	5.9	29500	29500	32800	29100	29100	32100
	251.15	4300	4360	7310	28	5.1	29500	29500	32800	29100	29100	32100

01 054 00 07

R107..

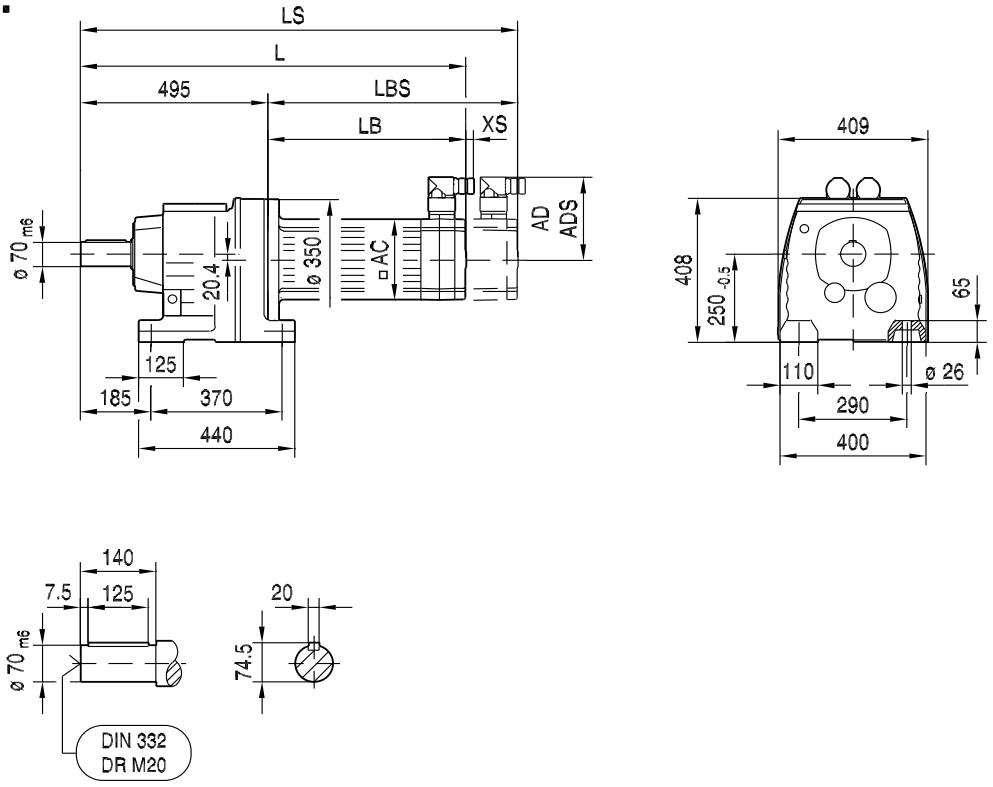

(→ 144)	CMP80L	CMP100S	CMP100M	CMP100L				
AC	0	162	162	162				
AD	0	146	146	146				
ADS	0	147	147	147				
L	495	709	749	829				
LS	495	805	845	925				
LB	0	214	254	334				
LBS	0	310	350	430				
XS	0	37	37	37				

01 055 00 07

RF107..

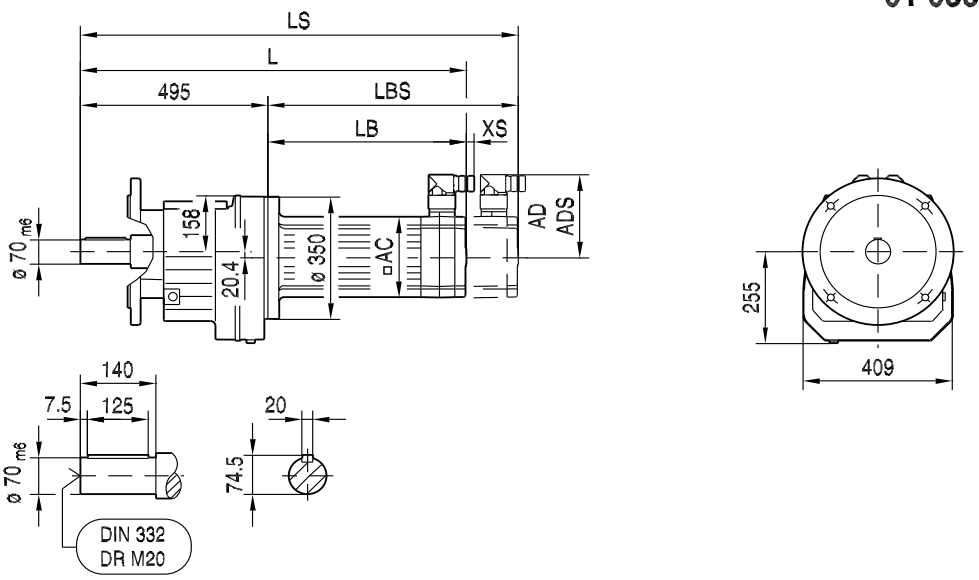

ø 350

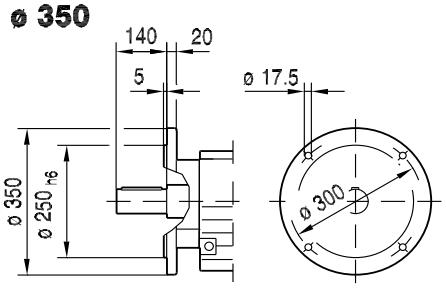

ø 450

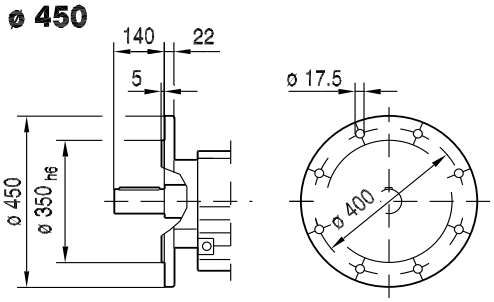

RM107..

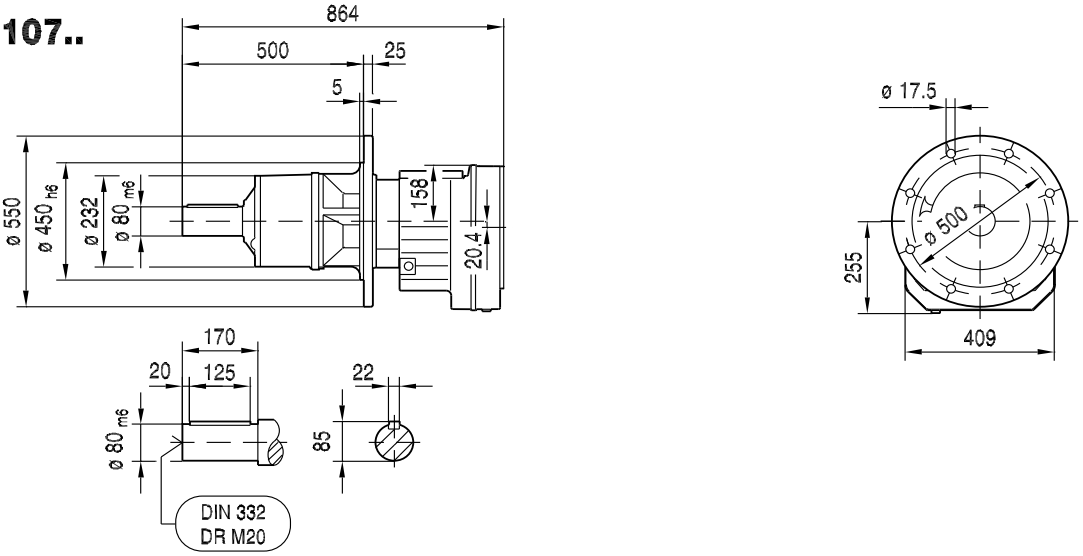

(→ 📖 144)	CMP80L	CMP100S	CMP100M	CMP100L				
AC	0	162	162	162				
AD	0	146	146	146				
ADS	0	147	147	147				
L	495	709	749	829				
LS	495	805	845	925				
LB	0	214	254	334				
LBS	0	310	350	430				
XS	0	37	37	37				

9 F..CMP

9.1 F, FA, FV, FH, FF, FAF, FVF, FHF, FA..B, FV..B, FH..B, FAZ, FVZ, FAF, FVF..CMP

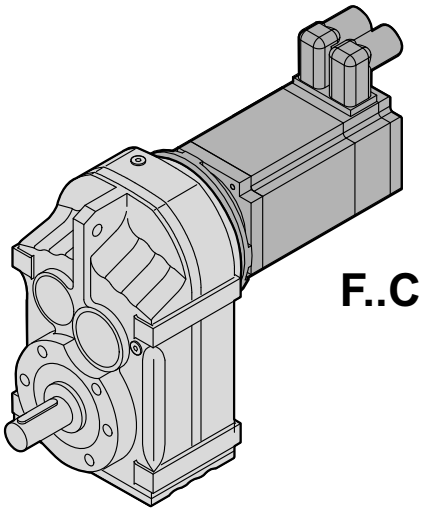

F..CMP..

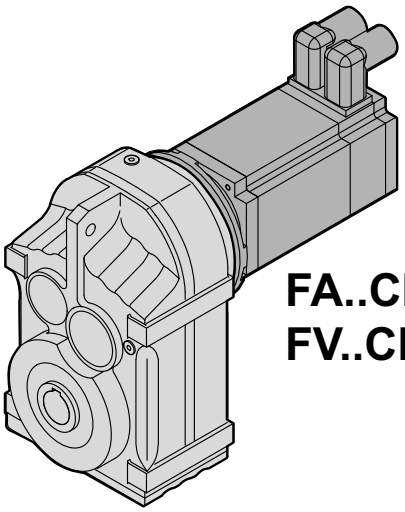

FA..CMP..
FV..CMP..

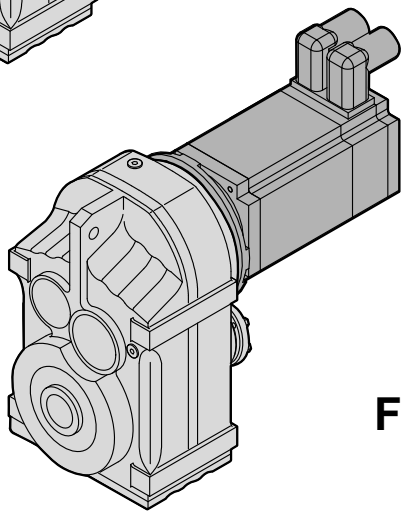

FH..CMP..

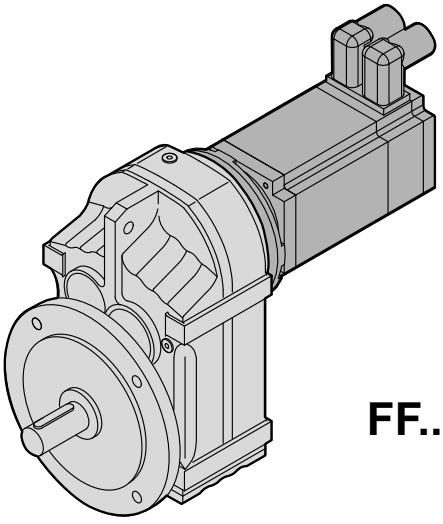

FF..CMP..

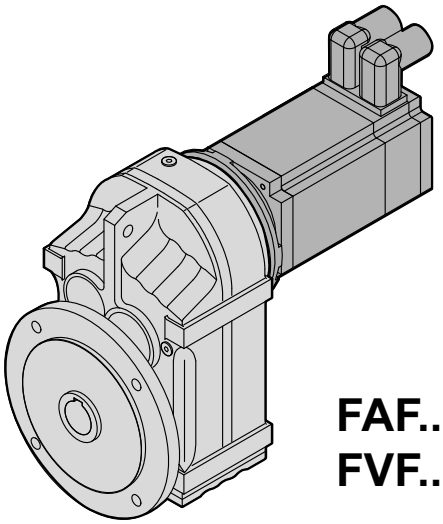

FAF..CMP..
FVF..CMP..

65961axx

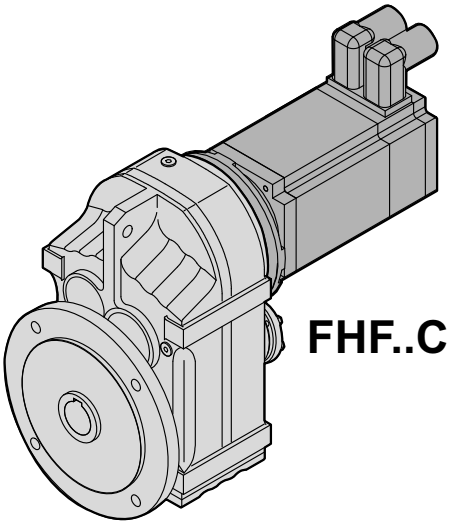

FHF..CMP..

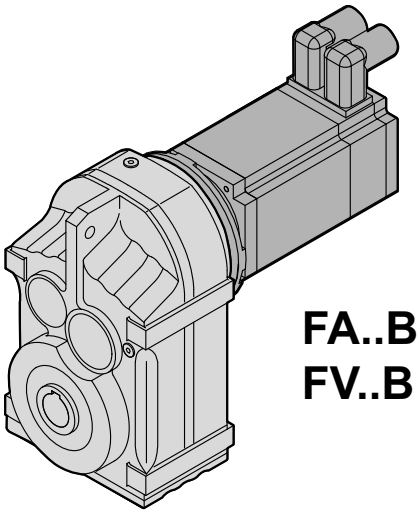

FA..B CMP..
FV..B CMP..

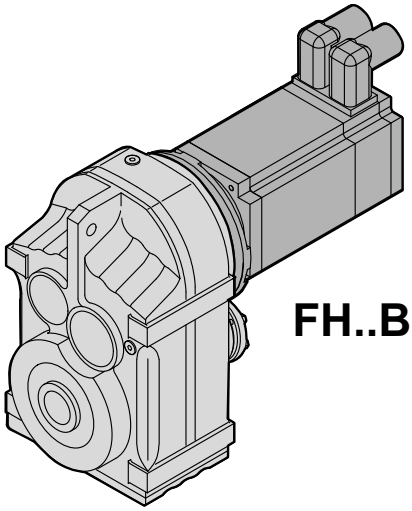

FH..B CMP..

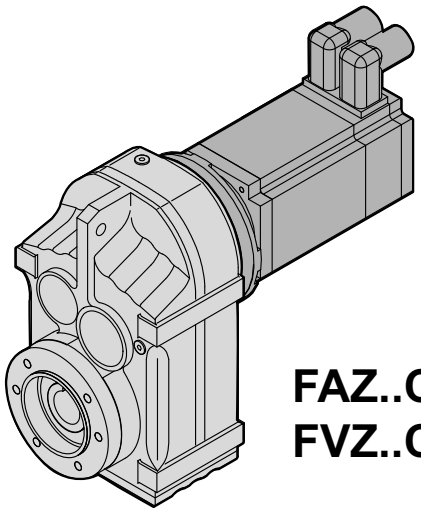

FAZ..CMP..
FVZ..CMP..

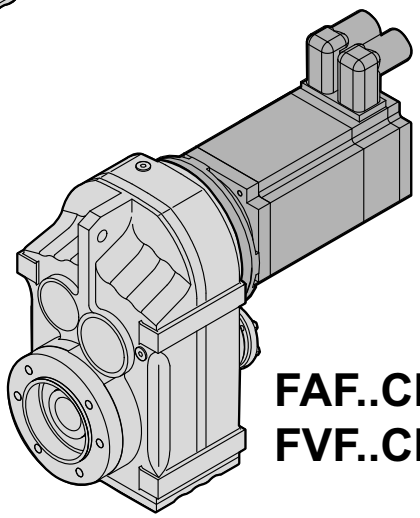

FAF..CMP..
FVF..CMP..

65962axx

9.2 F..[mm]

9.2.1 F 27

M_{aDyn} [Nm]		CMP								
	i	40M	50S	50M	50L	63S	63M	63L	71S	71M
FA27 2	4.16	15	21	42	62	45	86	123	77	124
	4.93	18	25	49	74	53	102	>144	92	>144
	5.27	19	27	53	79	57	109	>150	98	>150
	6.17	23	31	62	92	66	128	>163	115	>163
	6.91	25	35	69	103	74	143	>163	129	>163
	8.13	30	41	81	121	88	>163	>163	151	>163
	9.40	35	47	94	140	101	>163		>163	
	9.88	36	50	99	148	106	>157	>157	>157	>157
	10.55	39	53	105	>157	114	>157	>157	>157	>157
	12.35	46	62	123	>157	133	>157	>157	>157	>157
	13.84	51	70	138	>157	149	>157	>157	>157	>157
	16.28	60	82	>157	>157	>157	>157	>157	>157	>157
	18.84	69	95	>157	>157	>157	>157		>157	
	20.15	74	102	>157	>157	>157	>157		>157	
	23.25	86	117	>157		>157				
	27.18	99	136							
	29.56	108	148							
FA27 3	33.83	122	>157	>157	>157	>157	>157	>157	>157	>157
	38.33	138	>157	>157	>157	>157	>157		>157	
	40.89	148	>157	>157	>157	>157	>157	>157	>157	>157
	46.78	>157	>157	>157	>157	>157	>157		>157	
	50.19	>157	>157	>157	>157	>157	>157		>157	
	56.62	>157	>157	>157	>157	>157	>157	>157	>157	>157
	63.86	>157	>157	>157	>157	>157	>157	>157	>157	>157
	72.37	>157	>157	>157	>157	>157	>157		>157	
	77.21	>157	>157	>157	>157	>157	>157	>157	>157	>157
	88.32	>157	>157	>157	>157	>157	>157		>157	
	94.76	>157	>157	>157	>157	>157	>157		>157	
	109.90	>157	>157	>157		>157				
	129.09	>157	>157							
	140.74	>157	>157							

→ 144

m [kg]		CMP								
	s	40M	50S	50M	50L	63S	63M	63L	71S	71M
FA27	2	7.1	8.8	9.7	11	11	12	14	14	15
FA27	3	7.4	9.1	10.0	11	11	13	14	14	15
FAF: + 0.7 kg / F: + 0.5 kg / FF: + 1.3 kg										



F..CMP
F..[mm]

CMP..	i	n_{epk} [1/min]	η [%]	c_{TG} FA [Nm/°]	FAF [Nm/°]	F [Nm/°]	FF [Nm/°]
	4.16	4120	97	46	46	21	18
	4.93	4500	97	46	46	21	18
	5.27	4500	97	46	46	21	18
	6.17	4500	97	46	46	21	18
	6.91	4500	97	46	46	21	18
	8.13	4500	97	46	46	21	18
	9.40	4500	97	46	46	21	18
FA27	9.88	4500	97	83	83	26	22
2	10.55	4500	97	83	83	26	22
	12.35	4500	97	83	83	26	22
	13.84	4500	97	83	83	26	22
	16.28	4500	97	83	83	26	22
	18.84	4500	97	83	83	26	22
	20.15	4500	97	83	83	26	22
	23.25	4500	97	83	83	26	22
	27.18	4500	96	83	83	26	22
	29.56	4500	96	83	83	26	22
	33.83	4500	95	95	95	27	23
	38.33	4500	95	95	95	27	23
	40.89	4500	95	95	95	27	23
	46.78	4500	94	95	95	27	23
	50.19	4500	94	95	95	27	23
	56.62	4500	94	99	99	27	23
FA27	63.86	4500	94	99	99	27	23
3	72.37	4500	93	99	99	27	23
	77.21	4500	93	99	99	27	23
	88.32	4500	93	99	99	27	23
	94.76	4500	92	99	99	27	23
	109.90	4500	92	99	99	27	23
	129.09	4500	91	99	99	27	23
	140.74	4500	90	99	99	27	23

CMP..							F_{Ramax}				F_{Rapk}			
n_e = 1400	i	M_{amax} [Nm]	M_{apk} [Nm]	$M_{aNotaus}$ [Nm]	n_{ak} [1/min]	J_G 10^{-4} [kgm^2]	FA [N]	FAF [N]	F [N]	FF [N]	FA [N]	FAF [N]	F [N]	FF [N]
	4.16	87	130	148	361	1.4	1810	1810	1380	1180	4500	4500	4500	4500
	4.93	96	144	163	304	1.0	1860	1860	1420	1210	4500	4500	4500	4500
	5.27	100	150	170	266	0.90	1880	1880	1440	1220	4500	4500	4500	4500
	6.17	109	163	185	227	0.68	1940	1940	1480	1260	4500	4500	4500	4500
	6.91	114	163	194	217	0.56	2000	2000	1530	1300	4500	4500	4500	4500
	8.13	123	163	209	172	0.42	2080	2080	1580	1350	4500	4500	4500	4500
	9.40	130	163	221	160	0.33	2170	2170	1660	1410	4500	4500	4500	4500
FA27	9.88	130	157	221	202	0.74	2400	2400	1830	1560	4500	4500	4500	4500
2	10.55	130	157	221	209	0.67	2490	2490	1900	1620	4500	4500	4500	4500
	12.35	130	157	221	211	0.51	2700	2700	2060	1760	4500	4500	4500	4500
	13.84	130	157	221	210	0.43	2860	2860	2180	1860	4500	4500	4500	4500
	16.28	130	157	221	209	0.32	3110	3110	2370	2020	4500	4500	4500	4500
	18.84	130	157	221	212	0.26	3340	3340	2550	2170	4500	4500	4500	4500
	20.15	130	157	221	213	0.23	3450	3450	2630	2240	4500	4500	4500	4500
	23.25	130	157	221	215	0.19	3690	3690	2820	2400	4500	4500	4500	4500
	27.18	130	157	221	217	0.15	3970	3970	3030	2580	4500	4500	4500	4500
	29.56	130	157	221	220	0.13	4120	4120	3140	2680	4500	4500	4500	4500



CMP..							F_{Ramax}				F_{Rapk}			
n_e = 1400	i	M_{amax} [Nm]	M_{apk} [Nm]	$M_{aNotaus}$ [Nm]	n_{ak} [1/min]	J_G 10^{-4} [kgm^2]	FA [N]	FAF [N]	F [N]	FF [N]	FA [N]	FAF [N]	F [N]	FF [N]
FA27 3	33.83	130	157	221	166	0.31	4380	4380	3340	2850	4500	4500	4500	4500
	38.33	130	157	221	167	0.26	4500	4500	3530	3010	4500	4500	4500	4500
	40.89	130	157	221	166	0.23	4500	4500	3640	3100	4500	4500	4500	4500
	46.78	130	157	221	150	0.18	4500	4500	3860	3290	4500	4500	4500	4500
	50.19	130	157	221	139	0.17	4500	4500	3980	3390	4500	4500	4500	4500
	56.62	130	157	221	124	0.31	4500	4500	4180	3570	4500	4500	4500	4500
	63.86	130	157	221	110	0.26	4500	4500	4400	3750	4500	4500	4500	4500
	72.37	130	157	221	97	0.22	4500	4500	4500	3960	4500	4500	4500	4500
	77.21	130	157	221	91	0.20	4500	4500	4500	4060	4500	4500	4500	4500
	88.32	130	157	221	79	0.16	4500	4500	4500	4290	4500	4500	4500	4500
	94.76	130	157	221	74	0.15	4500	4500	4500	4420	4500	4500	4500	4500
	109.90	130	157	221	64	0.12	4500	4500	4500	4500	4500	4500	4500	4500
	129.09	130	157	221	54	0.090	4500	4500	4500	4500	4500	4500	4500	4500
	140.74	130	157	221	50	0.080	4500	4500	4500	4500	4500	4500	4500	4500

42 008 00 07

F27..

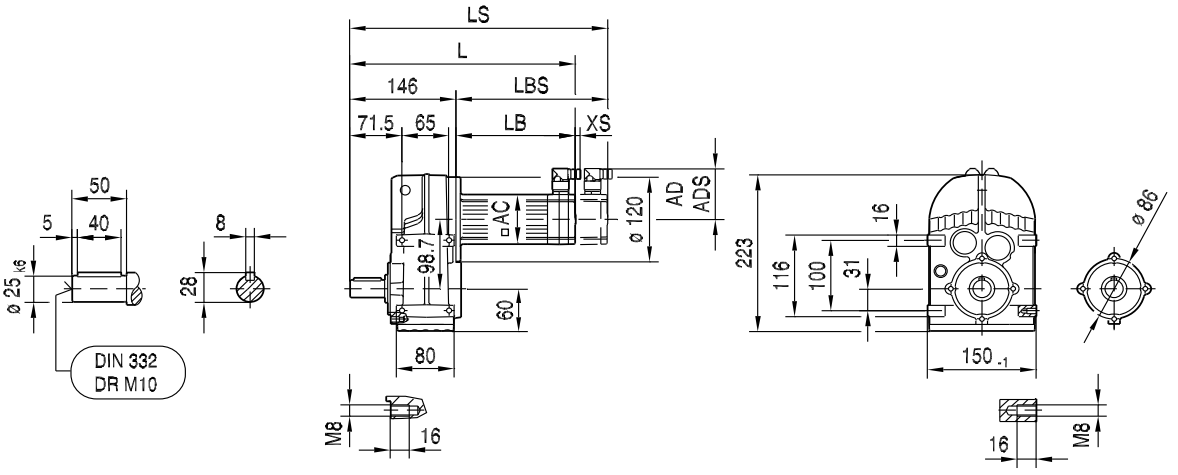

FA27B..

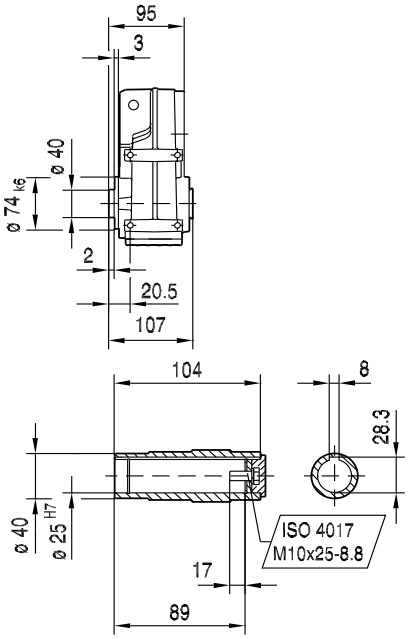

FH27B..

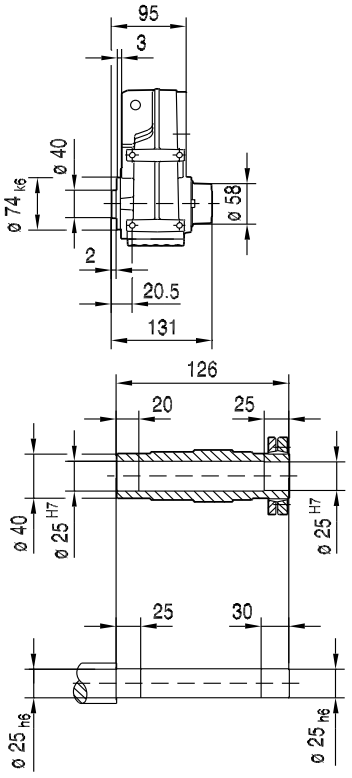

FV27B..

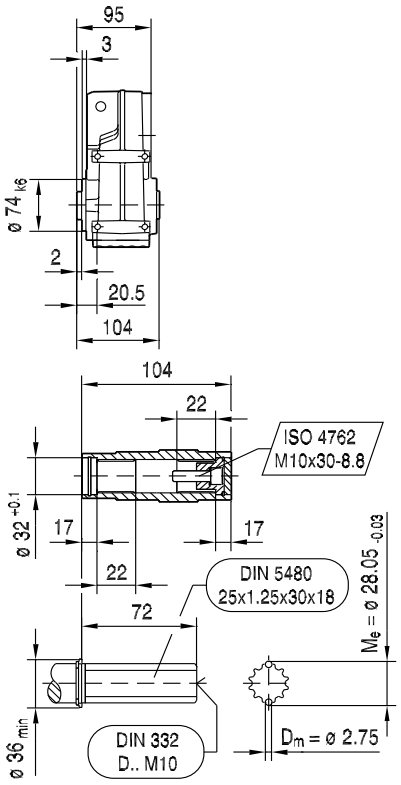

(→ 144)	CMP40M	CMP50S	CMP50M	CMP50L	CMP63S	CMP63M	CMP63L	CMP71S	CMP71M
AC	57	73	73	73	88	88	88	115	115
AD	78	86	86	86	92	92	92	102	102
ADS	78	86	86	86	92	92	92	104	104
L	289	291	330	369	326	376	429	318	346
LS	319	320	359	398	354	404	458	383	411
LB	143	145	184	223	180	230	283	172	200
LBS	173	174	213	252	208	258	312	237	265
XS	19	18	18	18	14	14	14	11	11

42 009 00 07

FF27..

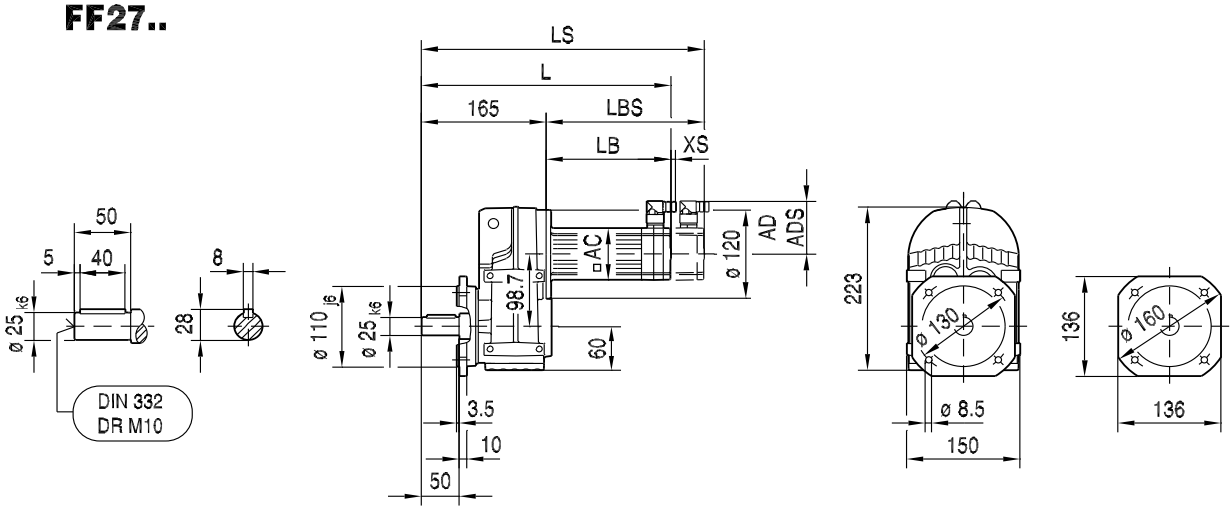

FAF27..

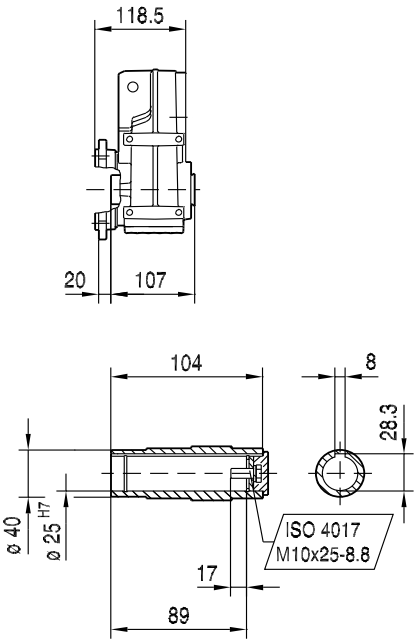

FHF27..

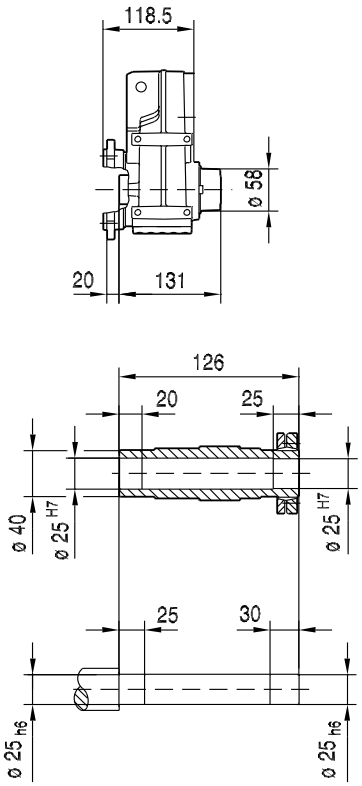

FVF27..

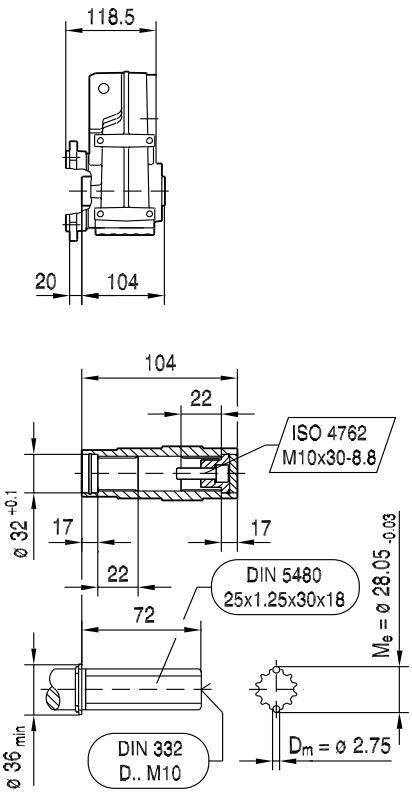

(→ 144)	CMP40M	CMP50S	CMP50M	CMP50L	CMP63S	CMP63M	CMP63L	CMP71S	CMP71M
AC	57	73	73	73	88	88	88	115	115
AD	78	86	86	86	92	92	92	102	102
ADS	78	86	86	86	92	92	92	104	104
L	308	310	349	388	345	395	448	337	365
LS	338	339	378	417	373	423	477	402	430
LB	143	145	184	223	180	230	283	172	200
LBS	173	174	213	252	208	258	312	237	265
XS	19	18	18	18	14	14	14	11	11

FA27..

42 010 00 07

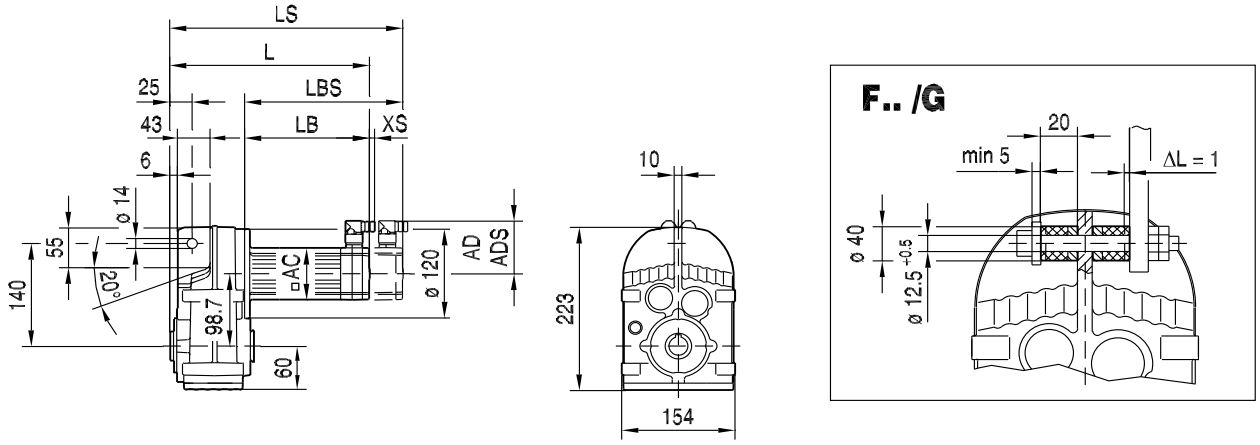

FA27..

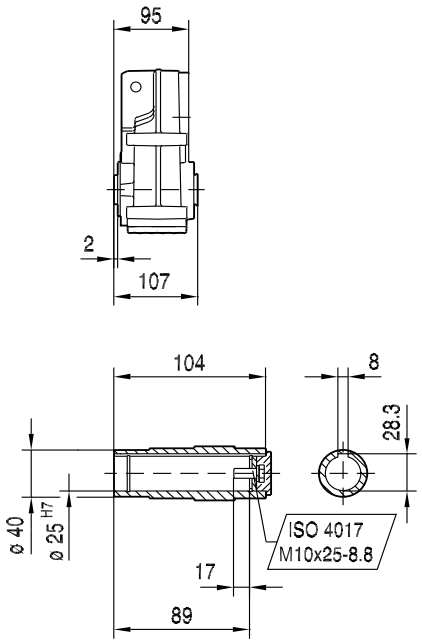

FH27..

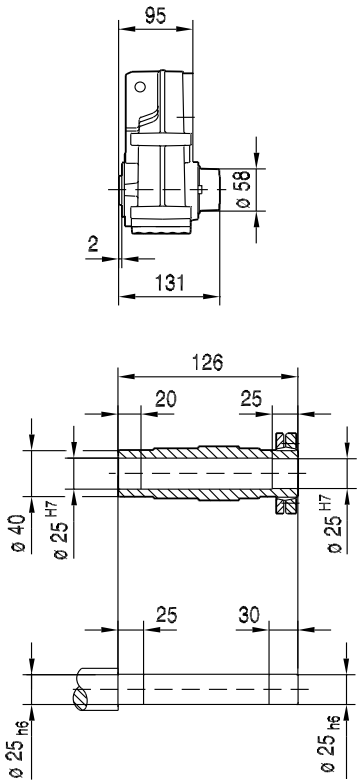

FV27..

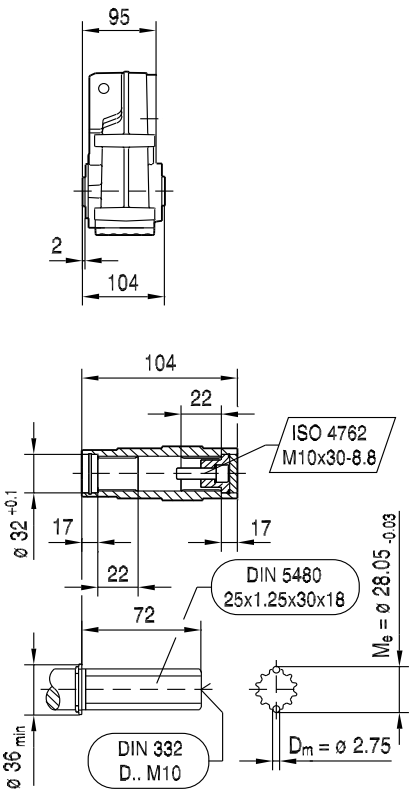

(→ 144)	CMP40M	CMP50S	CMP50M	CMP50L	CMP63S	CMP63M	CMP63L	CMP71S	CMP71M
AC	57	73	73	73	88	88	88	115	115
AD	78	86	86	86	92	92	92	102	102
ADS	78	86	86	86	92	92	92	104	104
L	238	240	279	318	275	325	378	267	295
LS	268	269	308	347	303	353	407	332	360
LB	143	145	184	223	180	230	283	172	200
LBS	173	174	213	252	208	258	312	237	265
XS	19	18	18	18	14	14	14	11	11

42 011 00 07

FAZ27..

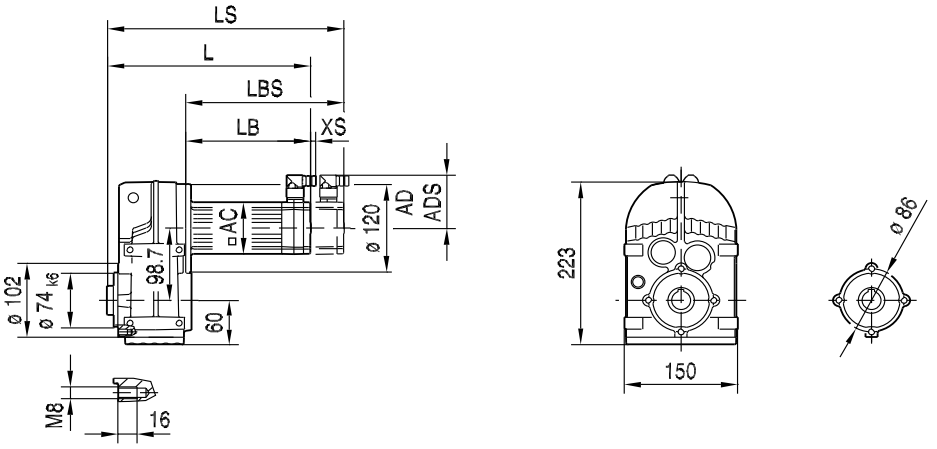

FAZ27..

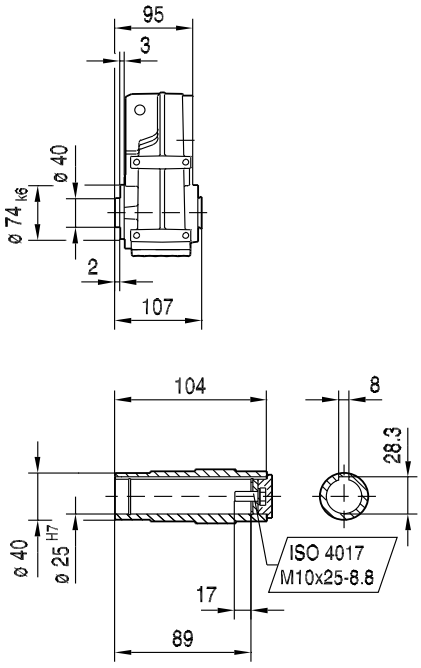

FHZ27..

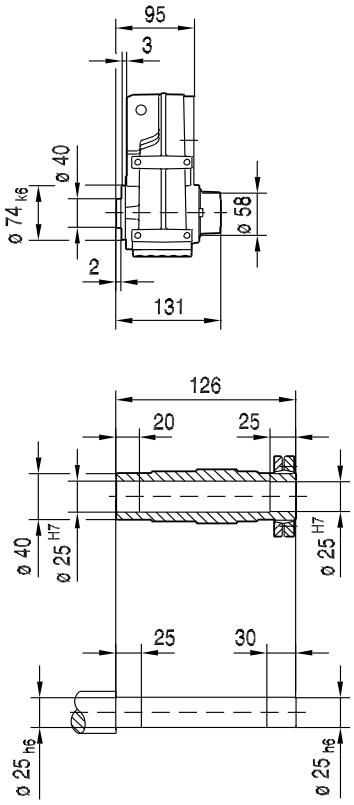

FVZ27..

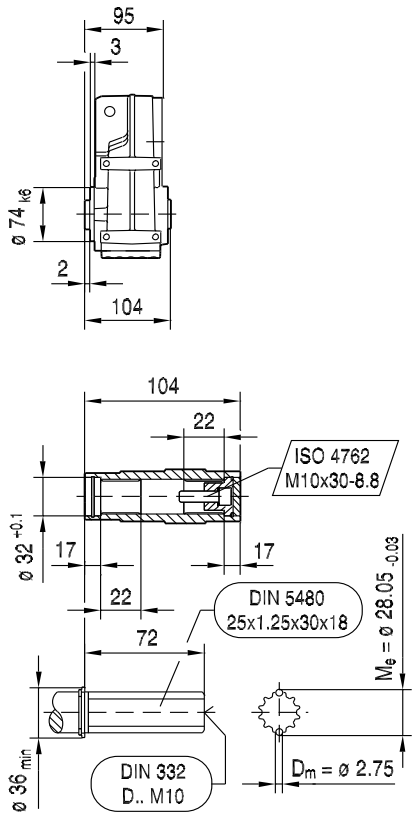

(→ 144)	CMP40M	CMP50S	CMP50M	CMP50L	CMP63S	CMP63M	CMP63L	CMP71S	CMP71M
AC	57	73	73	73	88	88	88	115	115
AD	78	86	86	86	92	92	92	102	102
ADS	78	86	86	86	92	92	92	104	104
L	238	240	279	318	275	325	378	267	295
LS	268	269	308	347	303	353	407	332	360
LB	143	145	184	223	180	230	283	172	200
LBS	173	174	213	252	208	258	312	237	265
XS	19	18	18	18	14	14	14	11	11

9.2.2 F 37

M_{aDyn} [Nm]		CMP								
	i	40M	50S	50M	50L	63S	63M	63L	71S	71M
FA37 2	3.77	14	19	38	56	41	78	111	70	113
	4.22	16	21	42	63	45	88	124	79	126
	4.90	18	25	49	73	53	102	144	91	146
	5.21	19	26	52	78	56	108	154	97	156
	6.05	22	31	60	90	65	126	178	113	181
	6.74	25	34	67	101	73	140	>188	126	>188
	7.44	27	38	74	111	80	154		139	
	8.01	30	40	80	120	86	166	235	149	235
	8.97	33	45	90	134	97	186	>240	167	>240
	10.42	38	53	104	156	112	215	>240	194	>240
	11.08	41	56	111	166	119	225	>240	205	>240
	12.87	47	65	129	192	139	>240	>240	235	>240
	14.33	53	72	143	210	154	>240	>240	>240	>240
	15.81	58	80	158	235	170	>240		>240	
	17.03	63	86	170	>240	183	>240	>240	>240	>240
	19.27	71	97	193	>240	205	>240		>240	
	20.57	76	104	205	>240	220	>240		>240	
	23.63	87	119	235		>240				
FA37 3	23.88	87	119	235	>240	>240	>240	>240	>240	>240
	28.09	102	140	>240	>240	>240	>240	>240	>240	>240
	31.69	116	158	>240	>240	>240	>240	>240	>240	>240
	35.91	130	177	>240	>240	>240	>240		>240	
	38.31	138	189	>240	>240	>240	>240	>240	>240	>240
	43.83	158	215	>240	>240	>240	>240		>240	
	47.02	170	230	>240	>240	>240	>240		>240	
	51.70	187	>240	>240	>240	>240	>240	>240	>240	>240
	54.54	197	>240	>240		>240				
	58.32	210	>240	>240	>240	>240	>240	>240	>240	>240
	66.09	235	>240	>240	>240	>240	>240		>240	
	70.50	>240	>240	>240	>240	>240	>240	>240	>240	>240
	80.65	>240	>240	>240	>240	>240	>240		>240	
	86.53	>240	>240	>240	>240	>240	>240		>240	
	100.36	>240	>240	>240		>240				
	117.88	>240	>240							
	128.51	>240	>240							

→ 📖 144

m [kg]		CMP								
	s	40M	50S	50M	50L	63S	63M	63L	71S	71M
FA37	2	13	15	16	17	17	19	20	20	21
FA37	3	13	15	16	17	17	19	20	20	22
FAF: + 1.5 kg / F: + 0.5 kg / FF: + 2.3 kg										



CMP..	i	n_{epk} [1/min]	η [%]	c_{TG} FA [Nm/']	FAF [Nm/']	F [Nm/']	FF [Nm/']	φ /R [']
	3.77	4500	97	41	41	20	15	12
	4.22	4500	97	41	41	20	15	11
	4.90	4500	97	41	41	20	15	11
	5.21	4500	97	41	41	20	15	10
	6.05	4500	97	41	41	20	15	10
	6.74	4500	97	41	41	20	15	10
	7.44	4500	97	41	41	20	15	10
	8.01	4500	97	84	84	26	19	7
FA37	8.97	4500	97	84	84	26	19	7
2	10.42	4500	97	84	84	26	19	7
	11.08	4500	97	84	84	26	19	7
	12.87	4500	97	84	84	26	19	7
	14.33	4500	97	84	84	26	19	7
	15.81	4500	97	84	84	26	19	6
	17.03	4500	97	84	84	26	19	6
	19.27	4500	97	84	84	26	19	6
	20.57	4500	97	84	84	26	19	6
	23.63	4500	97	84	84	26	19	6
	23.88	4500	96	94	94	27	19	8
	28.09	4500	96	94	94	27	19	8
	31.69	4500	96	94	94	27	19	8
	35.91	4500	95	94	94	27	19	8
	38.31	4500	95	94	94	27	19	8
	43.83	4500	95	94	94	27	19	8
	47.02	4500	95	94	94	27	19	8
FA37	51.70	4500	95	97	97	27	19	7
3	54.54	4500	95	94	94	27	19	8
	58.32	4500	95	97	97	27	19	7
	66.09	4500	95	97	97	27	19	7
	70.50	4500	94	97	97	27	19	7
	80.65	4500	94	97	97	27	19	7
	86.53	4500	94	97	97	27	19	7
	100.36	4500	94	97	97	27	19	7
	117.88	4500	93	97	97	27	19	7
	128.51	4500	93	97	97	27	19	7

CMP..							F_{Ramax}				F_{Rapk}			
n_e = 1400	i	M_{amax} [Nm]	M_{apk} [Nm]	$M_{aNotaus}$ [Nm]	n_{ak} [1/min]	J_G 10^{-4} [kgm^2]	FA [N]	FAF [N]	F [N]	FF [N]	FA [N]	FAF [N]	F [N]	FF [N]
	3.77	105	157	179	451	2.8	2470	2470	1970	2220	7000	7000	4810	5860
	4.22	110	165	187	427	2.3	2550	2550	2030	2300	7000	7000	4730	5820
	4.90	120	180	204	367	1.8	2630	2630	2100	2380	7000	7000	4560	5740
	5.21	125	187	213	326	1.6	2660	2660	2120	2410	7000	7000	4470	5700
	6.05	135	188	230	281	1.2	2750	2750	2190	2510	7000	7000	4460	5700
	6.74	140	188	238	267	1.0	2850	2850	2270	2600	7000	7000	4460	5700
	7.44	145	188	247	242	0.83	2940	2940	2350	2680	7000	7000	4460	5700
	8.01	170	240	289	200	1.5	2960	2960	2360	2710	7000	7000	3610	4100
FA37	8.97	175	240	298	190	1.3	3080	3080	2460	2820	7000	7000	3610	4100
2	10.42	185	240	315	163	1.0	3230	3230	2580	2960	7000	7000	3610	4100
	11.08	190	240	323	144	0.94	3290	3290	2620	3020	7000	7000	3610	4100
	12.87	200	240	340	124	0.74	3450	3450	2750	3170	7000	7000	3610	4100
	14.33	200	240	340	126	0.63	3650	3650	2910	3330	7000	7000	3610	4100
	15.81	200	240	340	127	0.52	3840	3840	3070	3490	7000	7000	3610	4100
	17.03	200	240	340	129	0.48	3990	3990	3180	3610	7000	7000	3610	4100
	19.27	200	240	340	130	0.40	4250	4250	3390	3820	7000	7000	3610	4100
	20.57	200	240	340	131	0.36	4390	4390	3500	3940	7000	7000	3610	4100
	23.63	200	240	340	135	0.29	4690	4690	3740	4190	7000	7000	3610	4100



F..CMP
F..[mm]

CMP..							F_{Ramax}				F_{Rapk}			
n_e = 1400	i	M_{amax} [Nm]	M_{apk} [Nm]	$M_{aNotaus}$ [Nm]	n_{ak} [1/min]	J_G 10^{-4} [kgm^2]	FA [N]	FAF [N]	F [N]	FF [N]	FA [N]	FAF [N]	F [N]	FF [N]
FA37 3	23.88	200	240	340	96	0.60	4720	4720	3760	4210	7000	7000	3610	4100
	28.09	200	240	340	96	0.45	5090	5090	4060	4520	7000	7000	3610	4100
	31.69	200	240	340	95	0.35	5380	5380	4290	4760	7000	7000	3610	4100
	35.91	200	240	340	97	0.29	5700	5700	4290	5020	7000	7000	3610	4100
	38.31	200	240	340	97	0.26	5870	5870	4290	5160	7000	7000	3610	4100
	43.83	200	240	340	96	0.21	6240	6240	4290	5460	7000	7000	3610	4100
	47.02	200	240	340	96	0.19	6430	6430	4290	5620	7000	7000	3610	4100
	51.70	200	240	340	95	0.34	6710	6710	4290	5670	7000	7000	3610	4100
	54.54	200	240	340	97	0.15	6860	6860	4290	5670	7000	7000	3610	4100
	58.32	200	240	340	96	0.27	7000	7000	4290	5670	7000	7000	3610	4100
	66.09	200	240	340	95	0.23	7000	7000	4290	5670	7000	7000	3610	4100
	70.50	200	240	340	95	0.21	7000	7000	4290	5670	7000	7000	3610	4100
	80.65	200	240	340	87	0.17	7000	7000	4290	5670	7000	7000	3610	4100
	86.53	200	240	340	81	0.15	7000	7000	4290	5670	7000	7000	3610	4100
	100.36	200	240	340	70	0.12	7000	7000	4290	5670	7000	7000	3610	4100
	117.88	200	240	340	59	0.10	7000	7000	4290	5670	7000	7000	3610	4100
	128.51	200	240	340	54	0.080	7000	7000	4290	5670	7000	7000	3610	4100

F37..

42 012 00 07

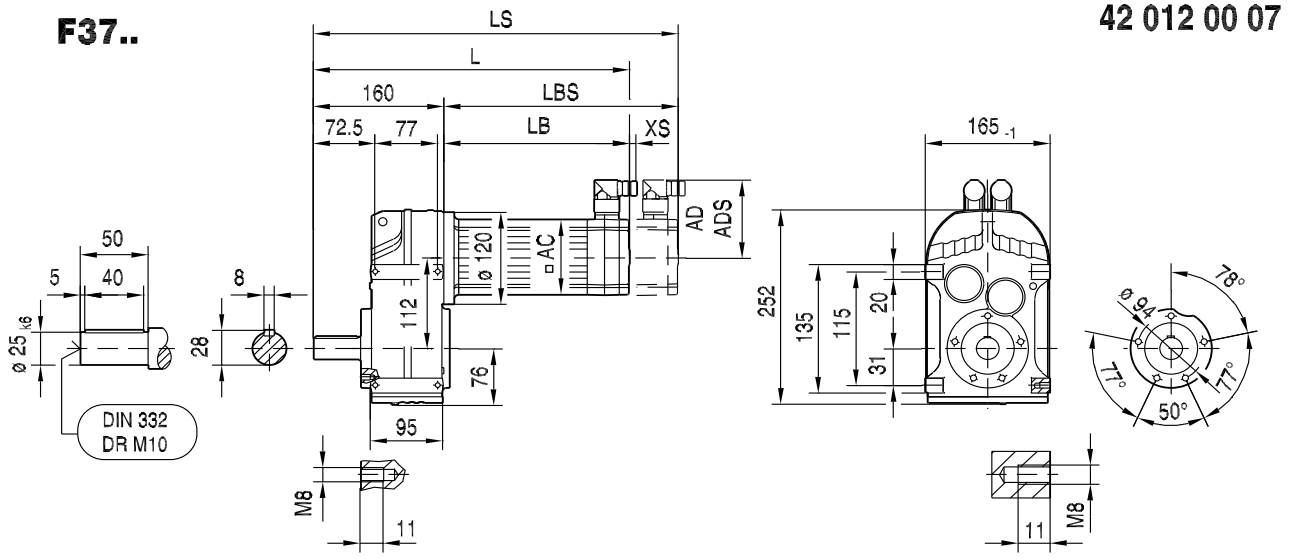

FA37B..

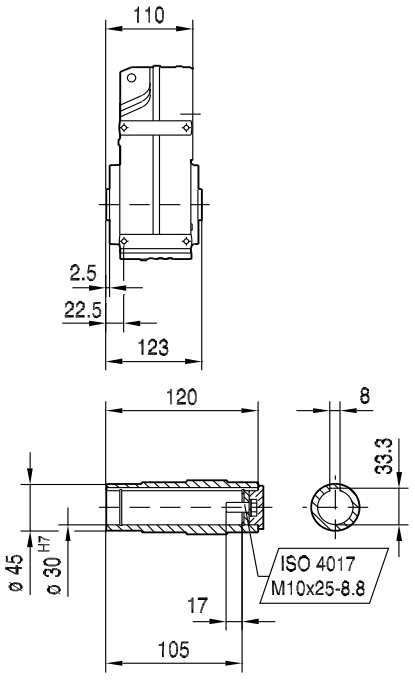

FH37B..

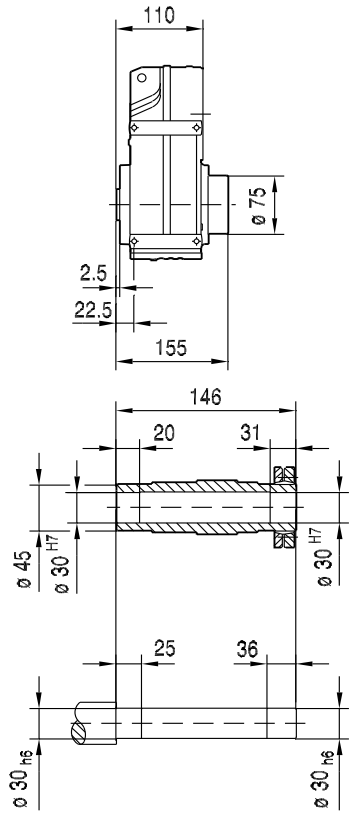

FV37B..

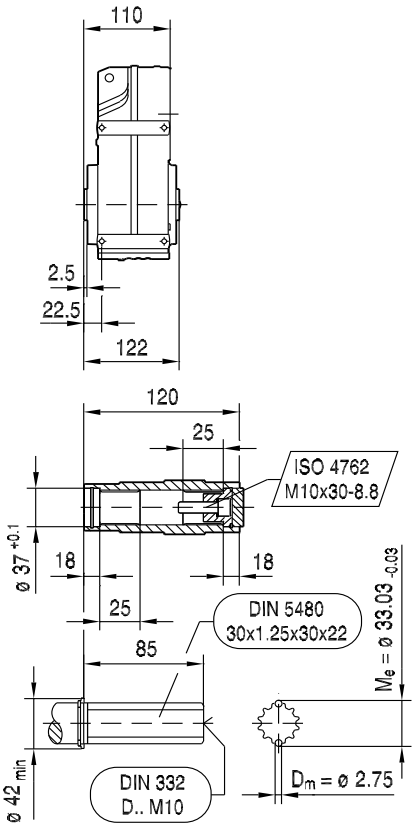

(→ 144)	CMP40M	CMP50S	CMP50M	CMP50L	CMP63S	CMP63M	CMP63L	CMP71S	CMP71M
AC	57	73	73	73	88	88	88	115	115
AD	78	86	86	86	92	92	92	102	102
ADS	78	86	86	86	92	92	92	104	104
L	303	305	344	383	340	390	443	332	360
LS	333	334	373	412	368	418	472	397	425
LB	143	145	184	223	180	230	283	172	200
LBS	173	174	213	252	208	258	312	237	265
XS	19	18	18	18	14	14	14	11	11

FF37..

42 013 00 07

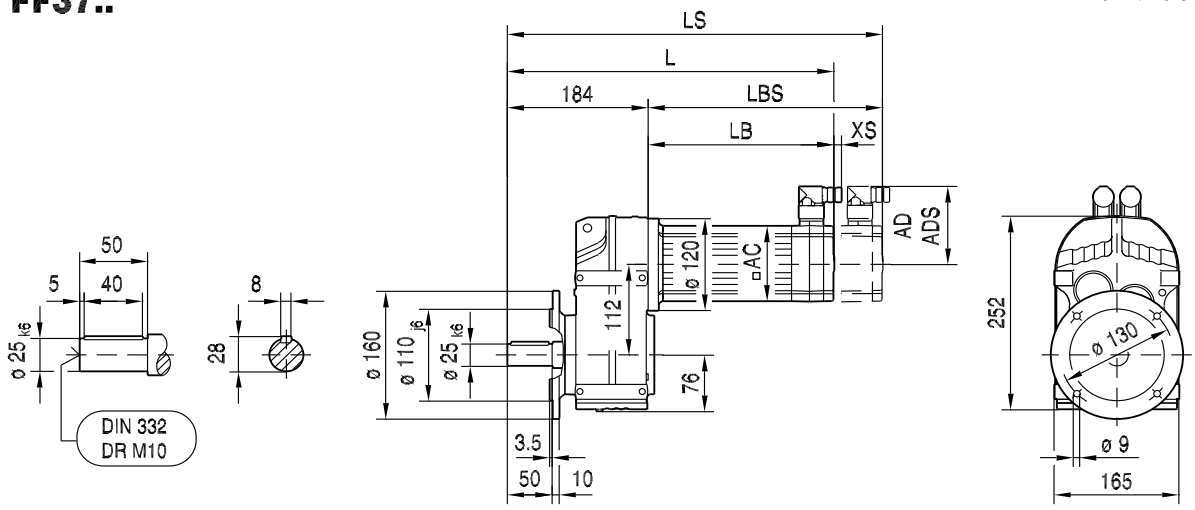

FAF37..

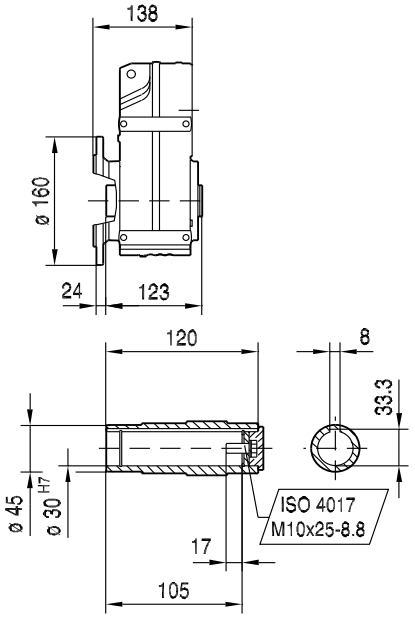

FHF37..

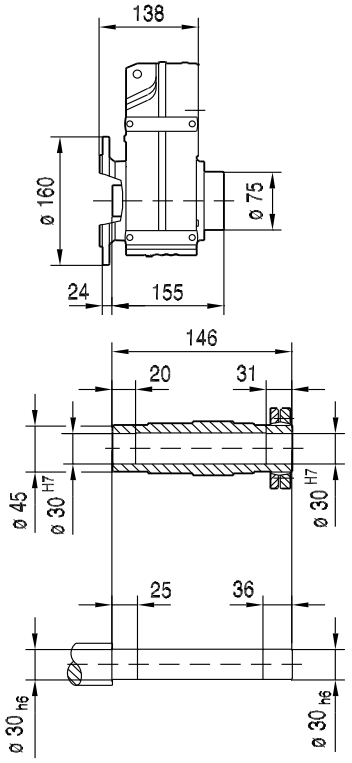

FVF37..

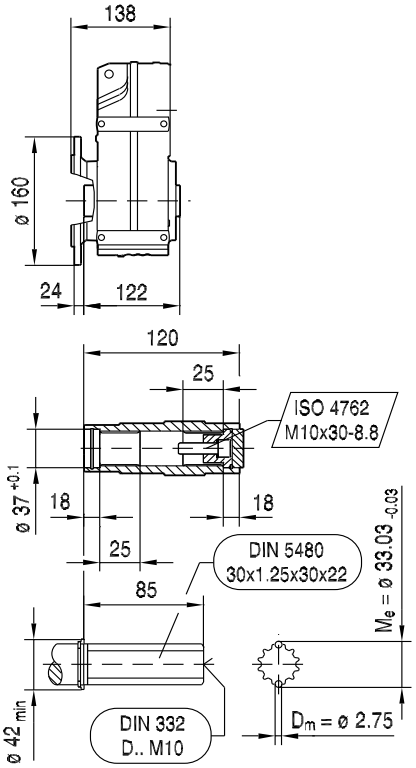

(→ 📖 144)	CMP40M	CMP50S	CMP50M	CMP50L	CMP63S	CMP63M	CMP63L	CMP71S	CMP71M
AC	57	73	73	73	88	88	88	115	115
AD	78	86	86	86	92	92	92	102	102
ADS	78	86	86	86	92	92	92	104	104
L	327	329	368	407	364	414	467	356	384
LS	357	358	397	436	392	442	496	421	449
LB	143	145	184	223	180	230	283	172	200
LBS	173	174	213	252	208	258	312	237	265
XS	19	18	18	18	14	14	14	11	11

42 014 00 07

FA37..

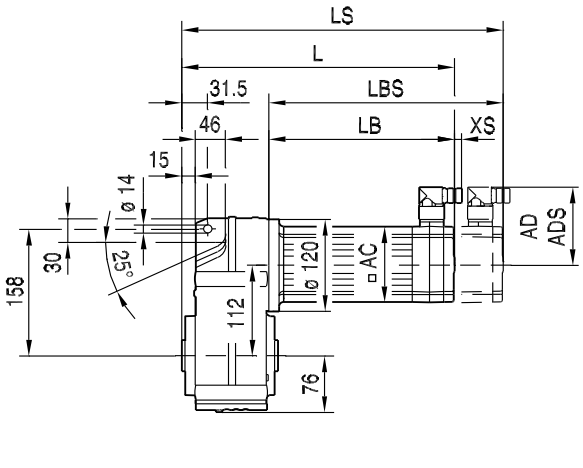

F.. /G

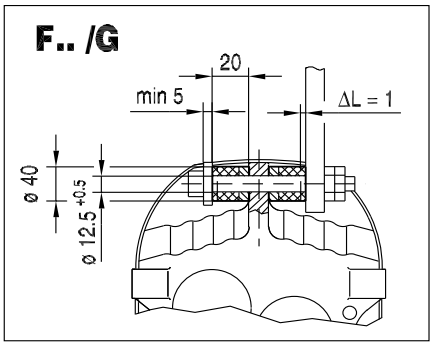

FA37..

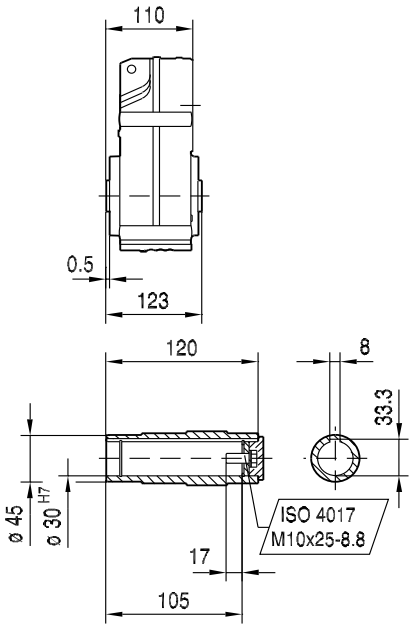

FH37..

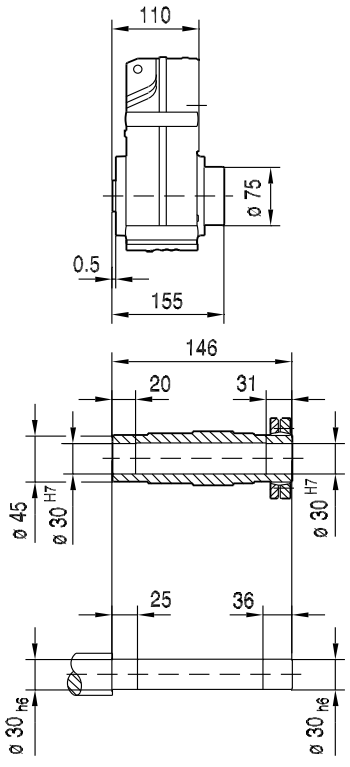

FV37..

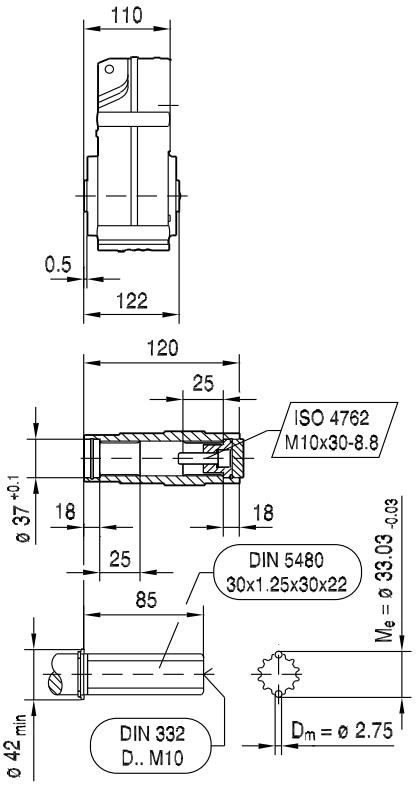

(→ 144)	CMP40M	CMP50S	CMP50M	CMP50L	CMP63S	CMP63M	CMP63L	CMP71S	CMP71M
AC	57	73	73	73	88	88	88	115	115
AD	78	86	86	86	92	92	92	102	102
ADS	78	86	86	86	92	92	92	104	104
L	253	255	294	333	290	340	393	282	310
LS	283	284	323	362	318	368	422	347	375
LB	143	145	184	223	180	230	283	172	200
LBS	173	174	213	252	208	258	312	237	265
XS	19	18	18	18	14	14	14	11	11

FAZ37..

42 015 00 07

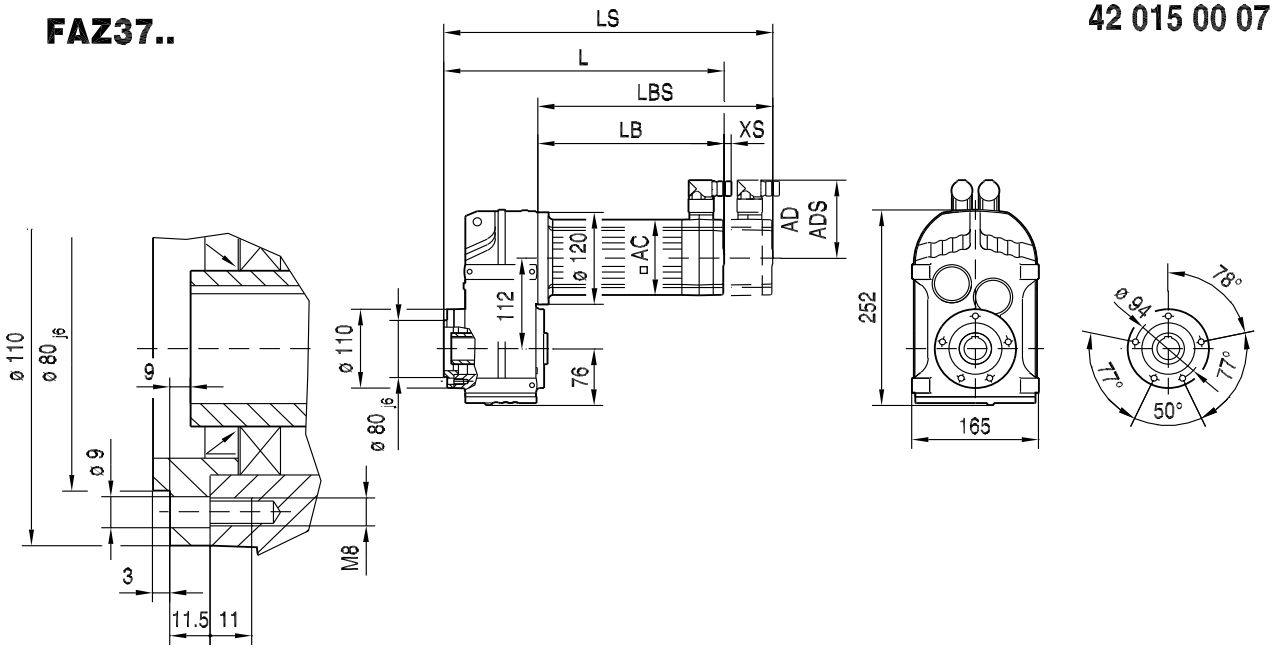

FAZ37..

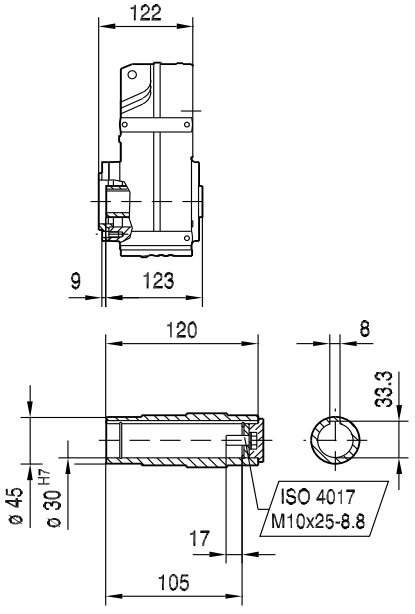

FHZ37..

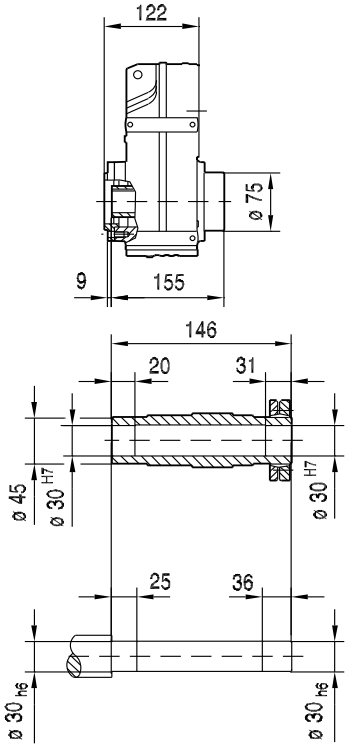

FVZ37..

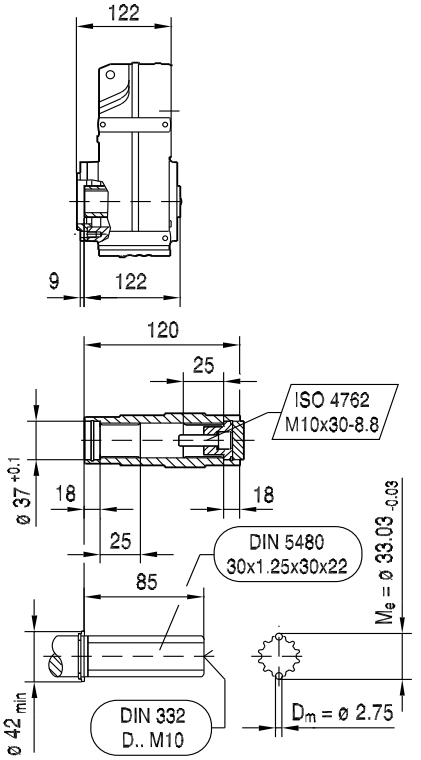

(→ 144)	CMP40M	CMP50S	CMP50M	CMP50L	CMP63S	CMP63M	CMP63L	CMP71S	CMP71M
AC	57	73	73	73	88	88	88	115	115
AD	78	86	86	86	92	92	92	102	102
ADS	78	86	86	86	92	92	92	104	104
L	265	267	306	345	302	352	405	294	322
LS	295	296	335	374	330	380	434	359	387
LB	143	145	184	223	180	230	283	172	200
LBS	173	174	213	252	208	258	312	237	265
XS	19	18	18	18	14	14	14	11	11

FT37..

42 016 00 07

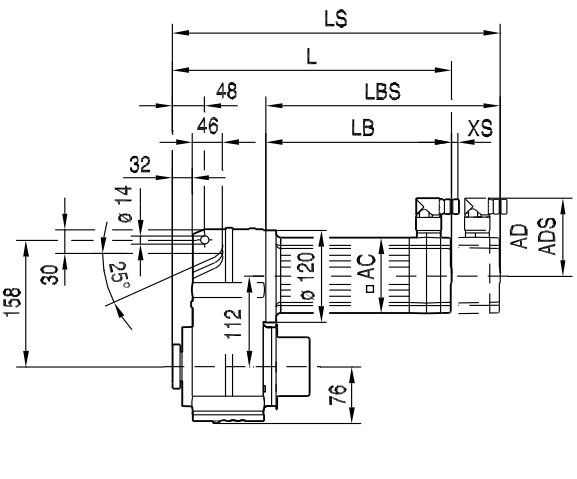

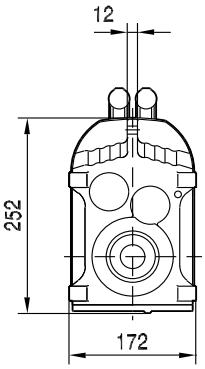

F.. /G

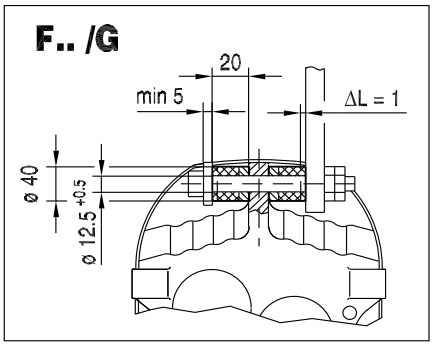

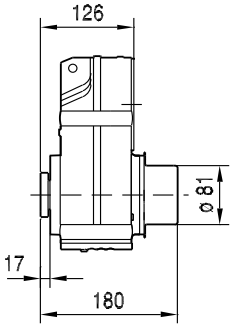

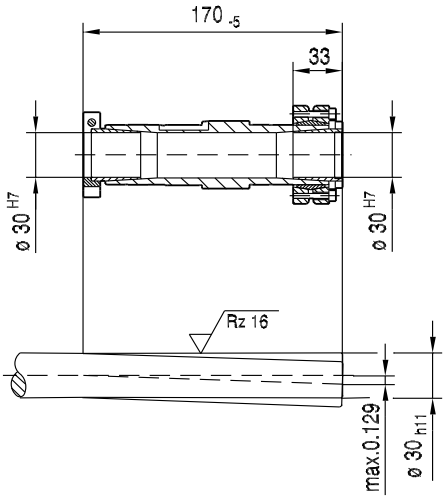

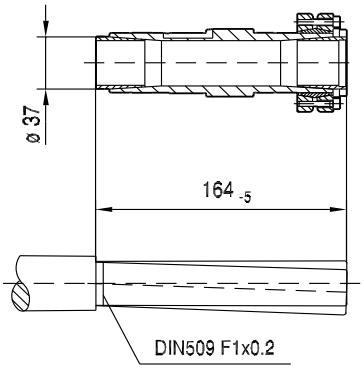

(→ 144)	CMP40M	CMP50S	CMP50M	CMP50L	CMP63S	CMP63M	CMP63L	CMP71S	CMP71M
AC	57	73	73	73	88	88	88	115	115
AD	78	86	86	86	92	92	92	102	102
ADS	78	86	86	86	92	92	92	104	104
L	269	271	310	349	306	356	409	298	326
LS	299	300	339	378	334	384	438	363	391
LB	143	145	184	223	180	230	283	172	200
LBS	173	174	213	252	208	258	312	237	265
XS	19	18	18	18	14	14	14	11	11



9.2.3 F 47

M_{aDyn} [Nm]		CMP										
	i	40M	50S	50M	50L	63S	63M	63L	71S	71M	71L	80S
FA47 2	4.99	18	25	50	75	54	104	147	93	149	225	200
	5.76	21	29	58	86	62	120	170	107	172	260	235
	6.34	23	32	63	95	68	132	187	118	189	285	255
	7.44	27	38	74	111	80	154	215	139	220	335	300
	7.88	29	40	79	118	85	164	230	147	235	355	320
	8.96	33	45	90	134	96	186	260	167	265	405	365
	10.97	40	55	110	164	118	225	320	200	325	>435	>435
	12.66	47	64	126	189	136	260	370	235	375	>435	>435
	13.93	51	70	139	205	150	285	410	255	415	>435	>435
	16.36	60	83	163	240	176	335	>435	300	>435	>435	>435
	17.33	64	87	173	255	187	355	>435	320	>435	>435	>435
	19.70	73	99	197	290	210	405	>435	365	>435	>435	>435
	21.82	80	110	215	325	230	>435	>435	405	>435	>435	>435
	25.72	95	130	255	380	275	>435	>435	>435	>435		
	29.32	108	148	290	>435	315	>435		>435			
	30.86	114	156	305	>435	330	>435		>435			
FA47 3	28.88	105	144	285	425	305	>435	>435	>435	>435	>435	>435
	34.29	125	171	335	>435	365	>435	>435	>435	>435	>435	>435
	36.61	134	183	360	>435	390	>435	>435	>435	>435	>435	>435
	42.86	156	210	420	>435	>435	>435	>435	>435	>435	>435	>435
	48.00	173	235	>435	>435	>435	>435	>435	>435	>435	>435	>435
	56.49	200	275	>435	>435	>435	>435	>435	>435	>435		
	65.36	235	320	>435	>435	>435	>435		>435			
	68.09	245	335	>435	>435	>435	>435	>435	>435	>435		
	79.72	285	390	>435	>435	>435	>435	>435	>435	>435		
	89.29	320	>435	>435	>435	>435	>435	>435	>435	>435		
	105.09	375	>435	>435	>435	>435	>435	>435	>435	>435		
	121.57	430	>435	>435	>435	>435	>435		>435			
	130.07	>435	>435	>435	>435	>435	>435		>435			
	150.06	>435	>435	>435		>435						
	175.38	>435	>435									
	190.76	>435	>435									

→ 144

m [kg]		CMP										
	s	40M	50S	50M	50L	63S	63M	63L	71S	71M	71L	80S
FA47	2	18	19	20	21	21	23	24	24	26	28	32
FA47	3	18	20	21	22	22	24	25	25	26	29	33
FAF: + 2.7 kg / F: + 0.8 kg / FF: + 3.9 kg												



CMP..	i	n_{epk} [1/min]	η [%]	c_{TG} FA [Nm/']	FAF [Nm/']	F [Nm/']	FF [Nm/']	φ /R [']
FA47 2	4.99	4500	97	99	99	34	30	9
	5.76	4500	97	99	99	34	30	9
	6.34	4500	97	99	99	34	30	8
	7.44	4500	97	99	99	34	30	8
	7.88	4500	97	99	99	34	30	8
	8.96	4500	97	99	99	34	30	8
	10.97	4500	97	125	125	37	32	6
	12.66	4500	97	125	125	37	32	6
	13.93	4500	97	125	125	37	32	6
	16.36	4500	97	125	125	37	32	6
	17.33	4500	97	125	125	37	32	6
	19.70	4500	97	125	125	37	32	6
	21.82	4500	97	125	125	37	32	6
	25.72	4500	97	125	125	37	32	6
	29.32	4500	97	125	125	37	32	6
	30.86	4500	97	125	125	37	32	6
FA47 3	28.88	4500	96	136	136	38	33	7
	34.29	4500	96	136	136	38	33	7
	36.61	4500	96	136	136	38	33	7
	42.86	4500	96	136	136	38	33	7
	48.00	4500	95	136	136	38	33	7
	56.49	4500	95	136	136	38	33	7
	65.36	4500	95	136	136	38	33	7
	68.09	4500	95	138	138	38	33	6
	79.72	4500	95	138	138	38	33	6
	89.29	4500	95	138	138	38	33	6
	105.09	4500	94	138	138	38	33	6
	121.57	4500	94	138	138	38	33	6
	130.07	4500	94	138	138	38	33	6
	150.06	4500	93	138	138	38	33	6
	175.38	4500	93	138	138	38	33	6
	190.76	4500	92	138	138	38	33	6

CMP..							F_{Ramax}				F_{Rapk}			
n_e = 1400	i	M_{amax} [Nm]	M_{apk} [Nm]	$M_{aNotaus}$ [Nm]	n_{ak} [1/min]	J_G 10^{-4} [kgm^2]	FA [N]	FAF [N]	F [N]	FF [N]	FA [N]	FAF [N]	F [N]	FF [N]
FA47 2	4.99	320	435	544	341	4.4	1160	1160	2310	2410	10000	10000	900	900
	5.76	340	435	578	295	3.4	1180	1180	2390	2500	10000	10000	900	900
	6.34	350	435	595	284	2.9	1230	1230	2470	2580	10000	10000	900	900
	7.44	380	435	646	242	2.3	1190	1190	2530	2660	10000	10000	900	900
	7.88	380	435	646	254	2.1	1280	1280	2630	2750	10000	10000	900	900
	8.96	330	435	561	424	1.6	1970	1970	3250	3310	10000	10000	900	900
	10.97	400	435	680	346	2.6	2060	2060	3440	3510	10000	10000	900	900
	12.66	400	435	680	371	2.1	2320	2320	3740	3790	10000	10000	900	900
	13.93	400	435	680	388	1.8	2510	2510	3950	3990	10000	10000	900	900
	16.36	400	435	680	403	1.5	2840	2840	4320	4340	10000	10000	900	900
	17.33	400	435	680	398	1.4	2960	2960	4450	4470	10000	10000	900	900
	19.70	400	435	680	355	1.1	3230	3230	4770	4770	10000	10000	900	900
	21.82	400	435	680	321	0.96	3460	3460	5030	5020	10000	10000	900	900
	25.72	400	435	680	272	0.75	3850	3850	5460	5430	10000	10000	900	900
	29.32	400	435	680	239	0.52	4170	4170	5830	5780	10000	10000	900	900
	30.86	400	435	680	227	0.46	4300	4300	5920	5920	10000	10000	900	900



F..CMP
F..[mm]

CMP..							F_{Ramax}				F_{Rapk}			
n_e = 1400	i	M_{amax} [Nm]	M_{apk} [Nm]	$M_{aNotaus}$ [Nm]	n_{ak} [1/min]	J_G 10^{-4} [kgm^2]	FA [N]	FAF [N]	F [N]	FF [N]	FA [N]	FAF [N]	F [N]	FF [N]
FA47 3	28.88	400	435	680	111	1.1	4130	4130	5790	5740	10000	10000	900	900
	34.29	400	435	680	111	0.85	4580	4580	5920	5920	10000	10000	900	900
	36.61	400	435	680	112	0.76	4750	4750	5920	5920	10000	10000	900	900
	42.86	400	435	680	112	0.58	5190	5190	5920	5920	10000	10000	900	900
	48.00	400	435	680	113	0.48	5520	5520	5920	5920	10000	10000	900	900
	56.49	400	435	680	113	0.36	6020	6020	5920	5920	10000	10000	900	900
	65.36	400	435	680	107	0.29	6490	6490	5920	5920	10000	10000	900	900
	68.09	400	435	680	103	0.61	6620	6620	5920	5920	10000	10000	900	900
	79.72	400	435	680	88	0.48	7160	7160	5920	5920	10000	10000	900	900
	89.29	400	435	680	78	0.40	7570	7570	5920	5920	10000	10000	900	900
	105.09	400	435	680	67	0.30	8180	8180	5920	5920	10000	10000	900	900
	121.57	400	435	680	58	0.25	8760	8760	5920	5920	10000	10000	900	900
	130.07	400	435	680	54	0.23	9040	9040	5920	5920	10000	10000	900	900
	150.06	400	435	680	47	0.18	9640	9640	5920	5920	10000	10000	900	900
	175.38	400	435	680	40	0.14	10000	10000	5920	5920	10000	10000	900	900
	190.76	400	435	680	37	0.13	10000	10000	5920	5920	10000	10000	900	900

F47..

42 017 00 07

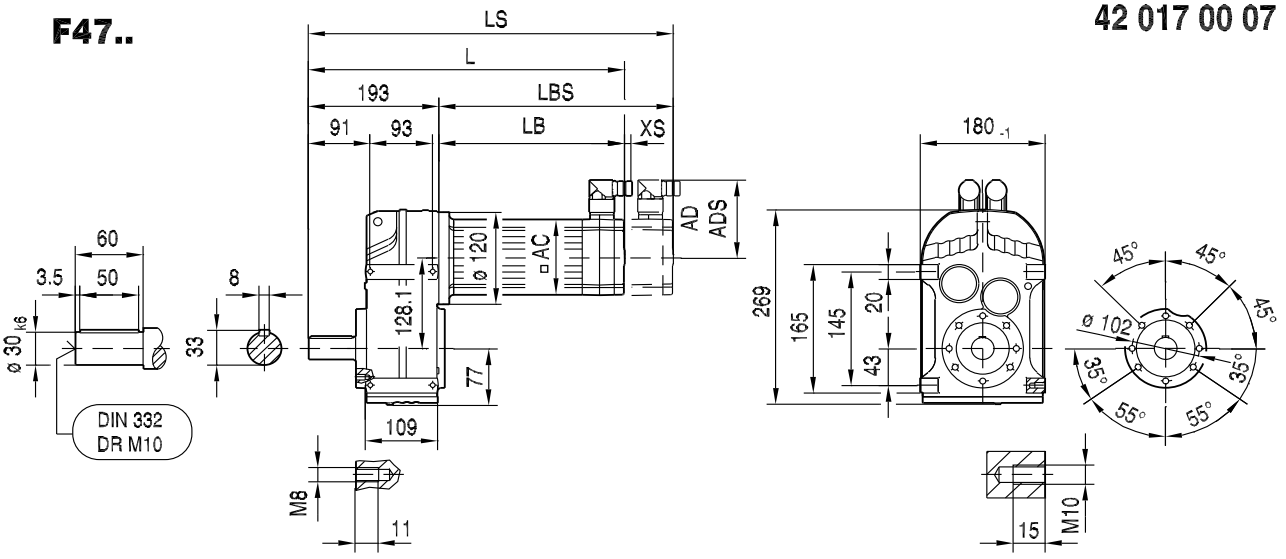

FA47B..

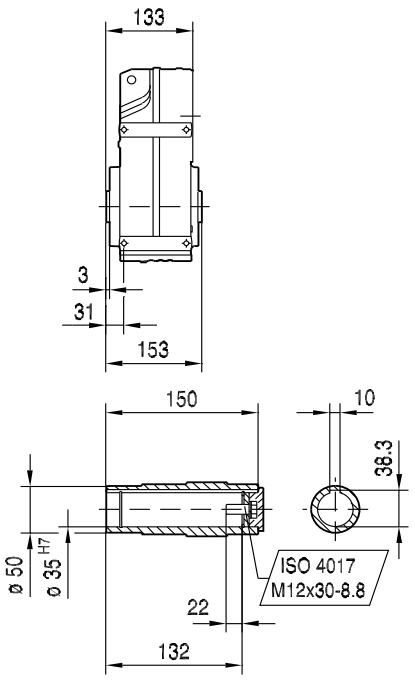

FH47B..

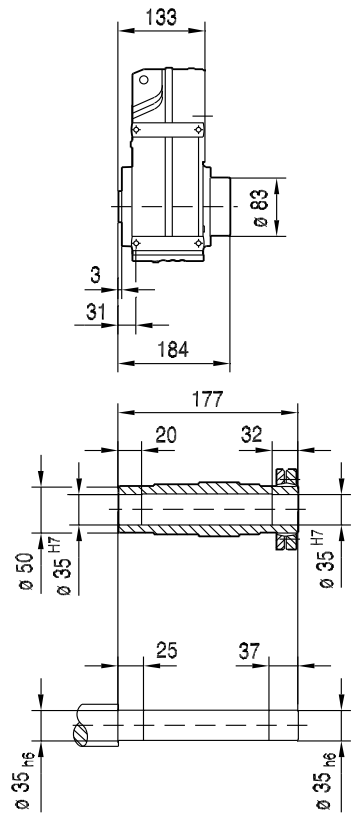

FV47B..

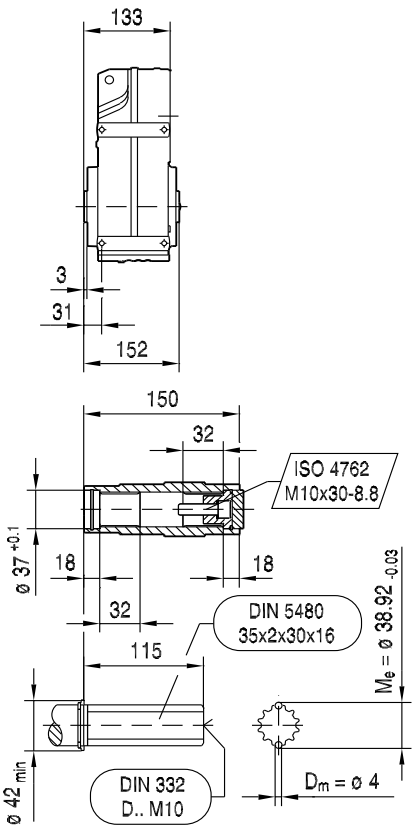

(→ 144)	CMP40M	CMP50S	CMP50M	CMP50L	CMP63S	CMP63M	CMP63L	CMP71S	CMP71M	CMP71L	CMP80S
AC	57	73	73	73	88	88	88	115	115	115	137
AD	78	86	86	86	92	92	92	102	102	102	134
ADS	78	86	86	86	92	92	92	104	104	104	137
L	336	338	377	416	373	423	476	365	393	440	405
LS	366	367	406	445	401	451	505	430	458	505	483
LB	143	145	184	223	180	230	283	172	200	247	212
LBS	173	174	213	252	208	258	312	237	265	312	290
XS	19	18	18	18	14	14	14	11	11	11	37

42 018 00 07

FF47..

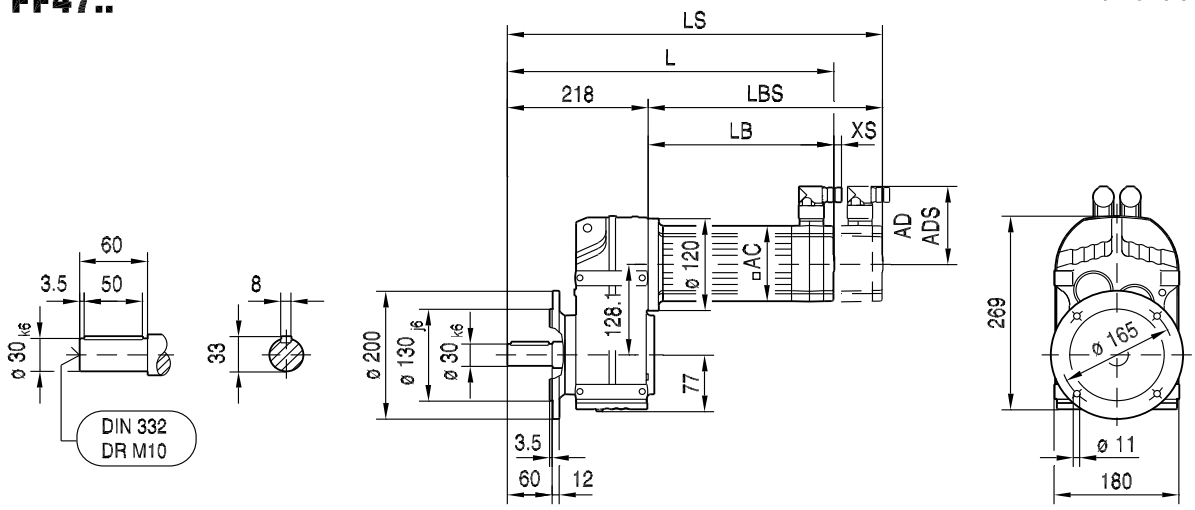

FAF47..

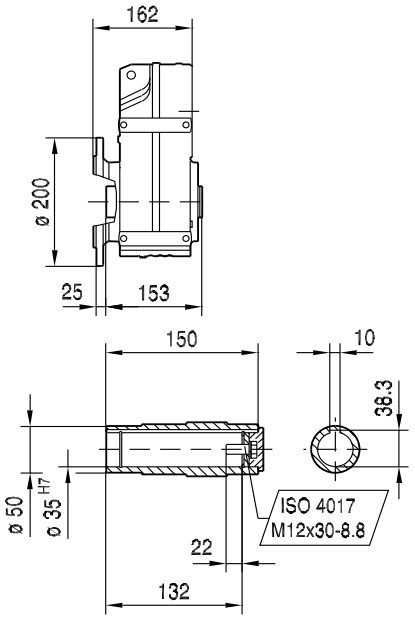

FHF47..

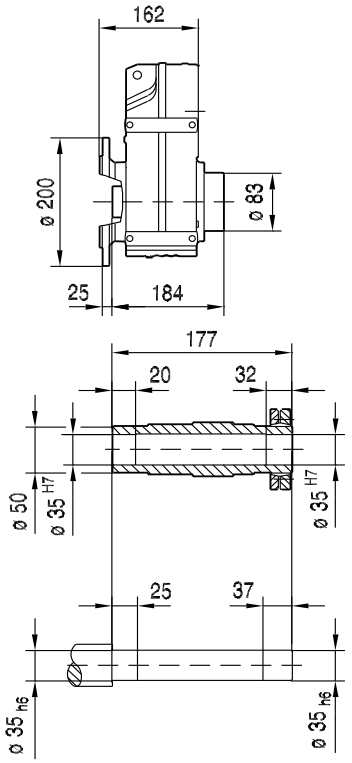

FVF47..

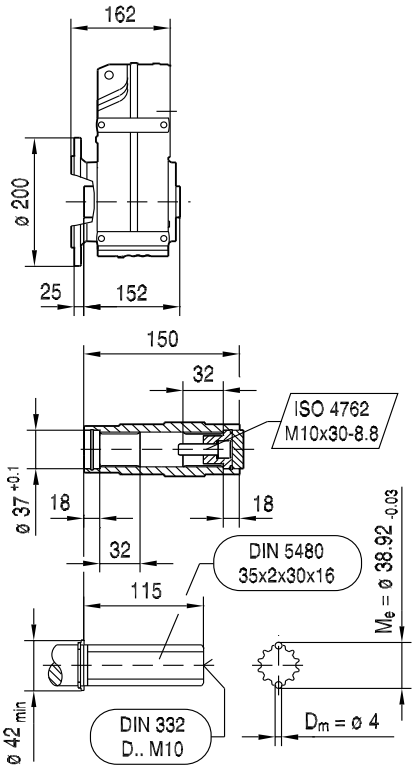

(→ 144)	CMP40M	CMP50S	CMP50M	CMP50L	CMP63S	CMP63M	CMP63L	CMP71S	CMP71M	CMP71L	CMP80S
AC	57	73	73	73	88	88	88	115	115	115	137
AD	78	86	86	86	92	92	92	102	102	102	134
ADS	78	86	86	86	92	92	92	104	104	104	137
L	361	363	402	441	398	448	501	390	418	465	430
LS	391	392	431	470	426	476	530	455	483	530	508
LB	143	145	184	223	180	230	283	172	200	247	212
LBS	173	174	213	252	208	258	312	237	265	312	290
XS	19	18	18	18	14	14	14	11	11	11	37

42 019 00 07

FA47..

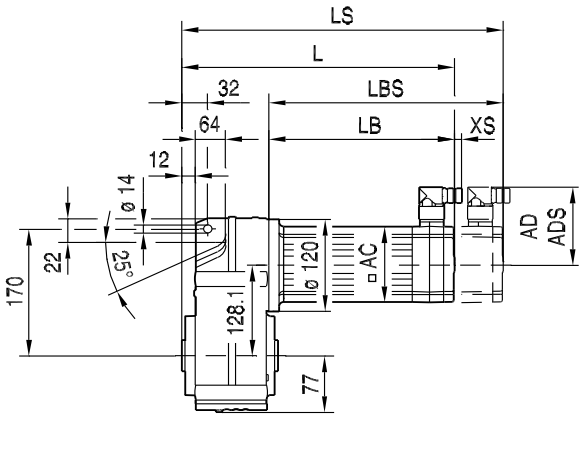

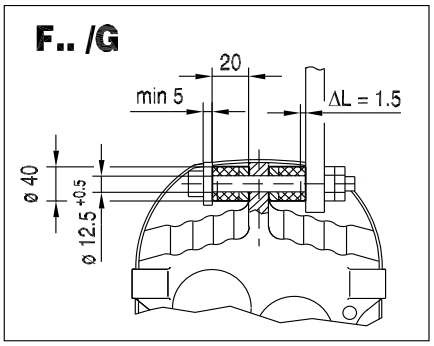

FA47..

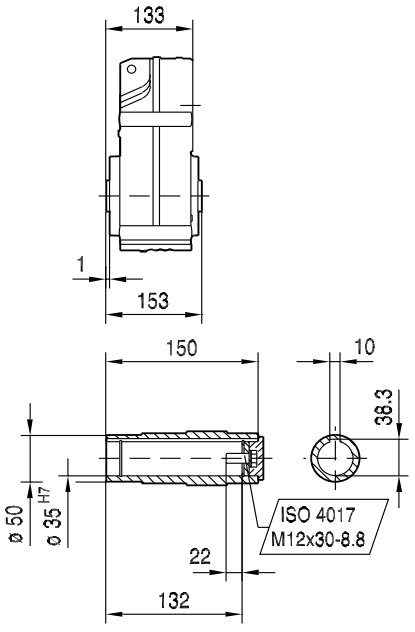

FH47..

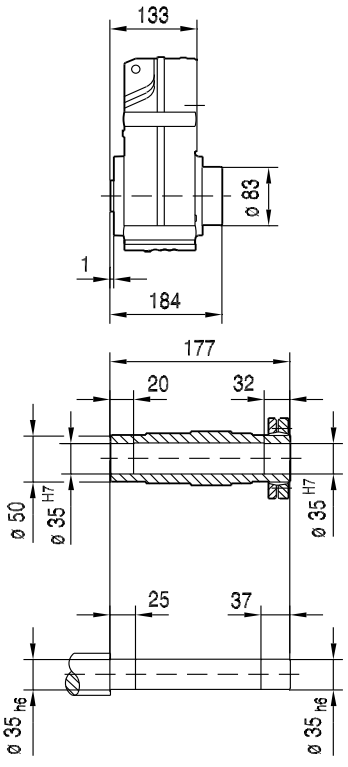

FV47..

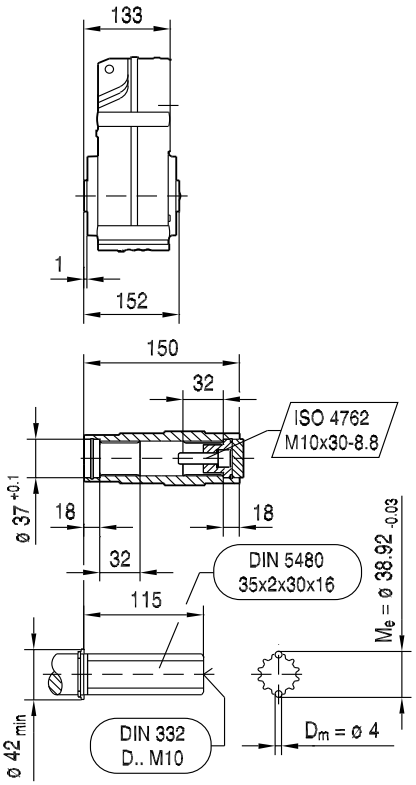

(→ 144)	CMP40M	CMP50S	CMP50M	CMP50L	CMP63S	CMP63M	CMP63L	CMP71S	CMP71M	CMP71L	CMP80S
AC	57	73	73	73	88	88	88	115	115	115	137
AD	78	86	86	86	92	92	92	102	102	102	134
ADS	78	86	86	86	92	92	92	104	104	104	137
L	276	278	317	356	313	363	416	305	333	380	345
LS	306	307	346	385	341	391	445	370	398	445	423
LB	143	145	184	223	180	230	283	172	200	247	212
LBS	173	174	213	252	208	258	312	237	265	312	290
XS	19	18	18	18	14	14	14	11	11	11	37

FAZ47..

42 020 00 07

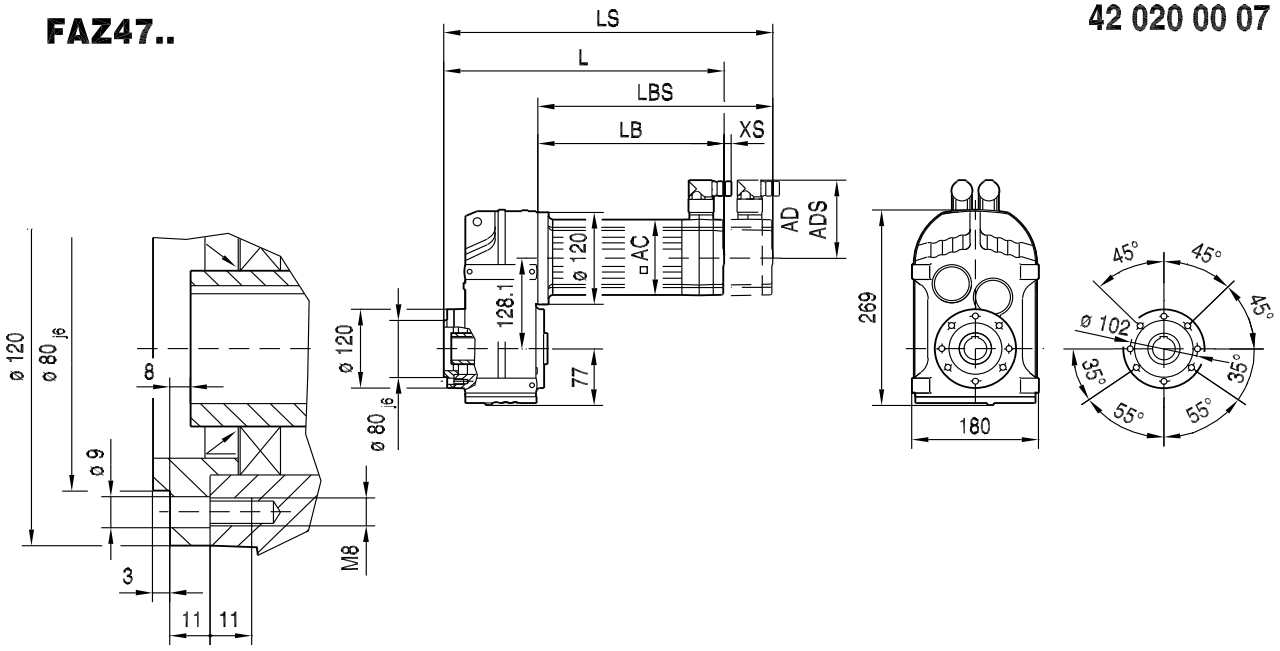

FAZ47..

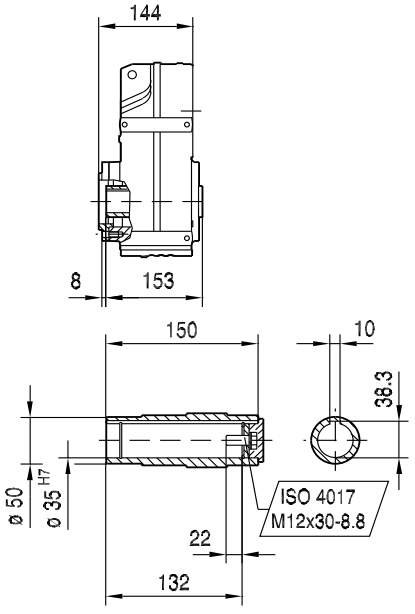

FHZ47..

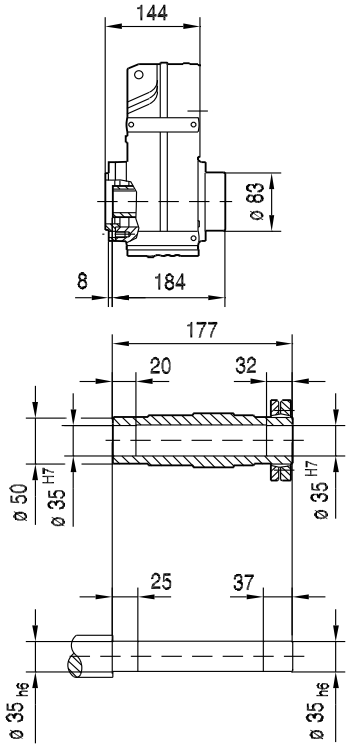

FVZ47..

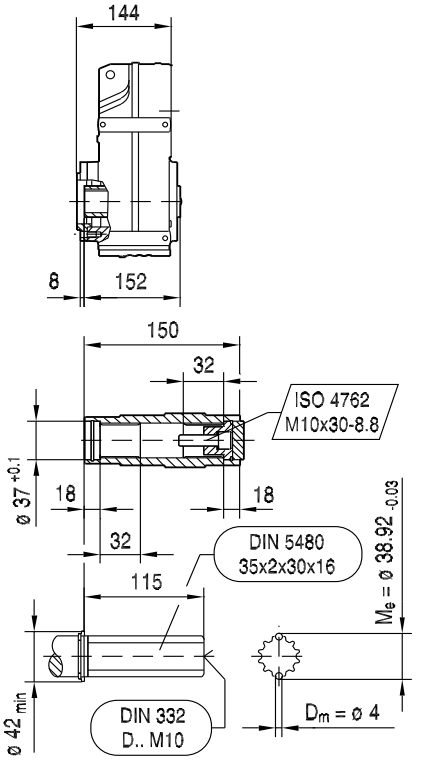

(→ 144)	CMP40M	CMP50S	CMP50M	CMP50L	CMP63S	CMP63M	CMP63L	CMP71S	CMP71M	CMP71L	CMP80S
AC	57	73	73	73	88	88	88	115	115	115	137
AD	78	86	86	86	92	92	92	102	102	102	134
ADS	78	86	86	86	92	92	92	104	104	104	137
L	287	289	328	367	324	374	427	316	344	391	356
LS	317	318	357	396	352	402	456	381	409	456	434
LB	143	145	184	223	180	230	283	172	200	247	212
LBS	173	174	213	252	208	258	312	237	265	312	290
XS	19	18	18	18	14	14	14	11	11	11	37

FT47..

42 021 00 07

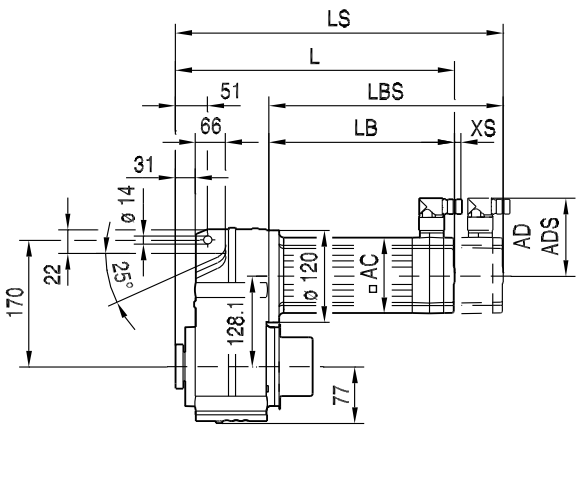

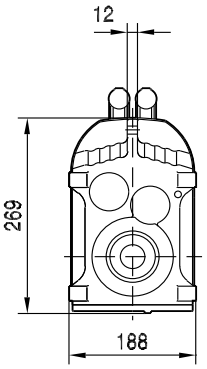

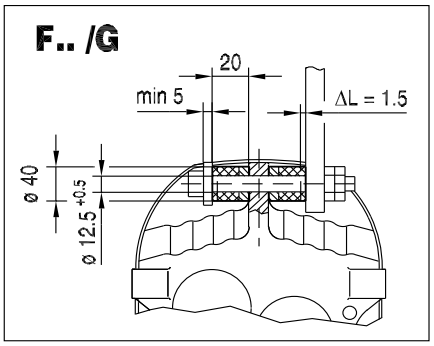

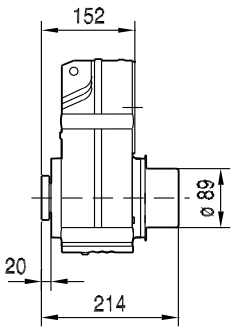

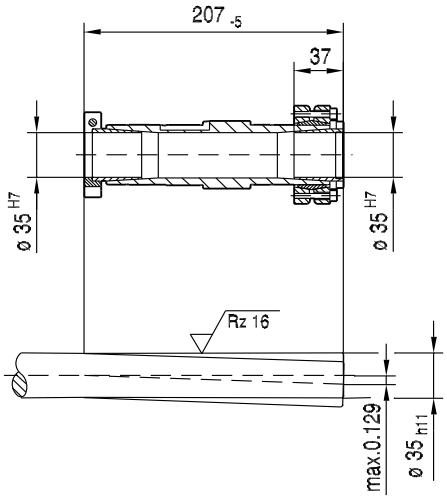

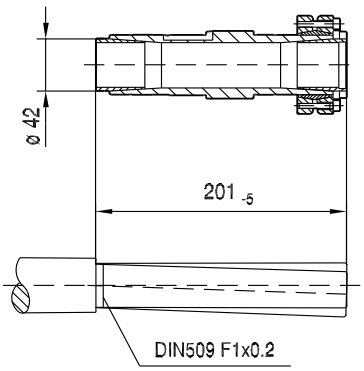

(→ 144)	CMP40M	CMP50S	CMP50M	CMP50L	CMP63S	CMP63M	CMP63L	CMP71S	CMP71M	CMP71L	CMP80S
AC	57	73	73	73	88	88	88	115	115	115	137
AD	78	86	86	86	92	92	92	102	102	102	134
ADS	78	86	86	86	92	92	92	104	104	104	137
L	295	297	336	375	332	382	435	324	352	399	364
LS	325	326	365	404	360	410	464	389	417	464	442
LB	143	145	184	223	180	230	283	172	200	247	212
LBS	173	174	213	252	208	258	312	237	265	312	290
XS	19	18	18	18	14	14	14	11	11	11	37



9.2.4 F 57

M_{aDyn} [Nm]		CMP											
	i	50S	50M	50L	63S	63M	63L	71S	71M	71L	80S	80M	100S
FA57 2	5.18	26	52	77	56	108	153	96	155	235	210	310	340
	5.98	30	60	89	64	124	176	111	179	270	240	360	395
	6.58	33	66	98	71	137	194	123	197	295	265	395	435
	7.73	39	77	115	83	160	225	144	230	350	315	465	>480
	8.19	41	82	122	88	170	240	153	240	370	330	>485	>485
	9.31	47	93	139	100	193	270	173	275	420	380		
	10.64	54	106	159	115	220	310	198	315	480	430	>645	>645
	12.29	62	123	184	132	255	360	225	365	555	500	>645	>645
	13.52	68	135	200	146	280	395	250	400	615	550	>645	>645
	15.88	80	159	235	171	325	465	295	470	>645	>645	>645	>645
	16.81	85	168	250	181	345	495	310	500	>645	>645	>645	>645
	19.11	96	191	285	205	395	560	355	570	>645	>645		
	21.17	107	210	315	225	435	620	390	630	>645	>645		
	24.96	126	245	370	265	515	>645	460	>645				
	28.45	144	280	420	305	590		525					
	29.94	151	295	445	320	620		555					
	34.24	173	340		365								
	40.13	200											
FA57 3	30.15	151	295	445	320	615	>645	555	>645	>645	>645	>645	>645
	35.79	179	350	525	380	>645	>645	>645	>645	>645	>645	>645	>645
	38.21	191	375	560	405	>645	>645	>645	>645	>645	>645	>645	>645
	44.73	220	440	>645	475	>645	>645	>645	>645	>645	>645		
	50.10	250	495	>645	530	>645	>645	>645	>645	>645	>645		
	58.97	290	575	>645	620	>645	>645	>645	>645				
	68.22	335	>645	>645	>645	>645		>645					
	72.98	360	>645	>645	>645	>645		>645					
	83.46	410	>645	>645	>645	>645	>645	>645	>645	>645	>645		
	93.47	460	>645	>645	>645	>645	>645	>645	>645	>645	>645		
	110.01	535	>645	>645	>645	>645	>645	>645	>645				
	127.27	620	>645	>645	>645	>645		>645					
	136.16	>645	>645	>645	>645	>645		>645					
	157.09	>645	>645		>645								
	183.60	>645											
	199.70	>645											

→ 144

m [kg]		CMP											
	s	50S	50M	50L	63S	63M	63L	71S	71M	71L	80S	80M	100S
FA57	2	26	27	28	29	30	32	32	33	35	38	40	46
FA57	3	27	28	29	29	31	32	32	34	36	39	41	47
FAF: + 5.5 kg / F: + 0.2 kg / FF: + 6.6 kg													



CMP..	i	n_{epk} [1/min]	η [%]	c_{TG} FA [Nm/']	FAF [Nm/']	F [Nm/']	FF [Nm/']	φ /R [']
FA57 2	5.18	4468	97	120	120	43	38	9
	5.98	4500	97	120	120	43	38	9
	6.58	4500	97	120	120	43	38	8
	7.73	4500	97	120	120	43	38	8
	8.19	4500	97	120	120	43	38	8
	9.31	4500	97	120	120	43	38	8
	10.64	4500	97	150	150	47	40	6
	12.29	4500	97	150	150	47	40	6
	13.52	4500	97	150	150	47	40	6
	15.88	4500	97	150	150	47	40	6
	16.81	4500	97	150	150	47	40	6
	19.11	4500	97	150	150	47	40	6
	21.17	4500	97	150	150	47	40	6
	24.96	4500	97	150	150	47	40	6
	28.45	4500	97	150	150	47	40	6
	29.94	4500	97	150	150	47	40	6
	34.24	4500	97	150	150	47	40	6
	40.13	4500	96	150	150	47	40	6
FA57 3	30.15	4500	96	169	169	49	41	7
	35.79	4500	96	169	169	49	41	7
	38.21	4500	96	169	169	49	41	7
	44.73	4500	96	169	169	49	41	7
	50.10	4500	96	169	169	49	41	7
	58.97	4500	95	169	169	49	41	7
	68.22	4500	95	169	169	49	41	6
	72.98	4500	95	169	169	49	41	6
	83.46	4500	95	171	171	49	42	6
	93.47	4500	95	171	171	49	42	6
	110.01	4500	94	171	171	49	42	6
	127.27	4500	94	171	171	49	42	6
	136.16	4500	94	171	171	49	42	6
	157.09	4500	94	171	171	49	42	6
	183.60	4500	93	171	171	49	42	6
	199.70	4500	93	171	171	49	42	6

CMP.. n_e = 1400	i	M_{amax} [Nm]	M_{apk} [Nm]	$M_{aNotaus}$ [Nm]	n_{ak} [1/min]	J_G 10^{-4} [kgm^2]	F_{Ramax} FA [N]	FAF [N]	F [N]	FF [N]	F_{Rapk} FA [N]	FAF [N]	F [N]	FF [N]
FA57 2	5.18	415	475	706	405	5.8	2020	2020	3460	3670	11500	11500	9910	8490
	5.98	420	475	714	452	4.5	2240	2240	3730	3940	11500	11500	9910	8490
	6.58	420	480	714	502	3.8	2430	2430	3940	4140	11500	11500	9880	8460
	7.73	420	480	714	595	2.9	2760	2760	4310	4500	11500	11500	9880	8460
	8.19	420	485	714	623	2.6	2880	2880	4450	4640	11500	11500	9840	8440
	9.31	420	460	714	666	2.0	3170	3170	4760	4950	11500	11500	10000	8580
	10.64	600	645	1020	207	3.2	2470	2470	4320	4590	11500	11500	6930	6930
	12.29	600	645	1020	212	2.6	2810	2810	4710	4970	11500	11500	6930	6930
	13.52	600	645	1020	207	2.2	3050	3050	4980	5230	11500	11500	6930	6930
	15.88	600	645	1020	214	1.8	3470	3470	5450	5690	11500	11500	6930	6930
	16.81	600	645	1020	214	1.6	3630	3630	5620	5860	11500	11500	6930	6930
	19.11	600	645	1020	215	1.3	3980	3980	6020	6260	11500	11500	6930	6930
	21.17	600	645	1020	217	1.1	4280	4280	6350	6580	11500	11500	6930	6930
	24.96	575	645	978	252	0.84	4970	4970	7060	7260	11500	11500	6930	6930
	28.45	535	645	910	246	0.59	5690	5690	7760	7930	11500	11500	6930	6930
	29.94	545	645	927	234	0.53	5790	5790	7890	8060	11500	11500	6930	6930
	34.24	500	645	850	204	0.43	6580	6580	8670	8500	11500	11500	6930	6930
	40.13	290	435	493	174	0.34	8750	8750	10500	9550	11500	11500	10400	8850



F..CMP
F..[mm]

CMP..							F_{Ramax}				F_{Rapk}			
n_e = 1400	i	M_{amax} [Nm]	M_{apk} [Nm]	$M_{aNotaus}$ [Nm]	n_{ak} [1/min]	J_G 10^{-4} [kgm^2]	FA [N]	FAF [N]	F [N]	FF [N]	FA [N]	FAF [N]	F [N]	FF [N]
FA57 3	30.15	590	645	1003	50	1.3	5460	5460	7650	7850	11500	11500	6930	6930
	35.79	600	645	1020	47	0.94	5980	5980	8250	7900	11500	11500	6930	6930
	38.21	600	645	1020	50	0.84	6210	6210	8510	7900	11500	11500	6930	6930
	44.73	600	645	1020	49	0.64	6790	6790	9160	7900	11500	11500	6930	6930
	50.10	600	645	1020	50	0.52	7230	7230	9200	7900	11500	11500	6930	6930
	58.97	600	645	1020	51	0.38	7890	7890	9200	7900	11500	11500	6930	6930
	68.22	600	645	1020	51	0.31	8510	8510	9200	7900	11500	11500	6930	6930
	72.98	600	645	1020	51	0.28	8810	8810	9200	7900	11500	11500	6930	6930
	83.46	600	645	1020	42	0.51	9420	9420	9200	7900	11500	11500	6930	6930
	93.47	600	645	1020	42	0.42	9960	9960	9200	7900	11500	11500	6930	6930
	110.01	600	645	1020	42	0.31	10800	10800	9200	7900	11500	11500	6930	6930
	127.27	600	645	1020	42	0.26	11500	11500	9200	7900	11500	11500	6930	6930
	136.16	600	645	1020	43	0.23	11500	11500	9200	7900	11500	11500	6930	6930
	157.09	600	645	1020	43	0.19	11500	11500	9200	7900	11500	11500	6930	6930
	183.60	600	645	1020	38	0.15	11500	11500	9200	7900	11500	11500	6930	6930
	199.70	600	645	1020	35	0.13	11500	11500	9200	7900	11500	11500	6930	6930

F57..

42 022 00 07

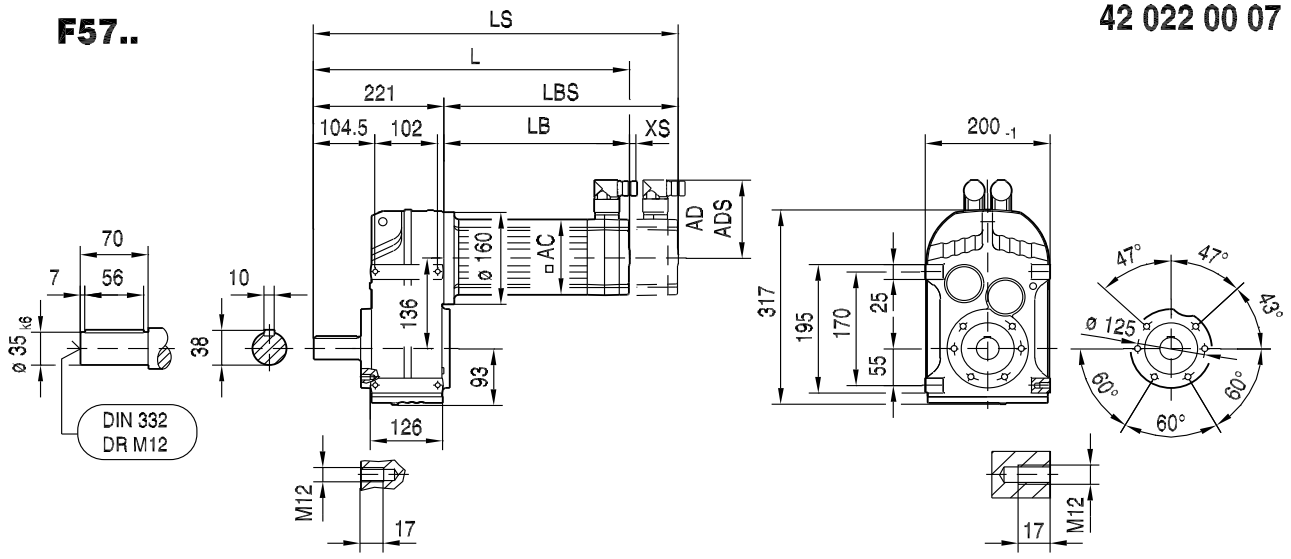

FA57B..

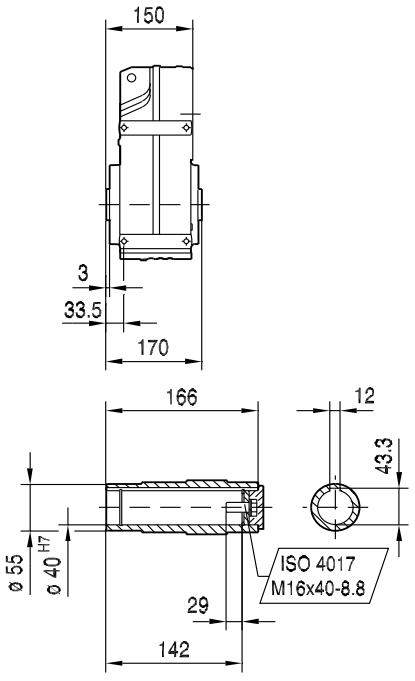

FH57B..

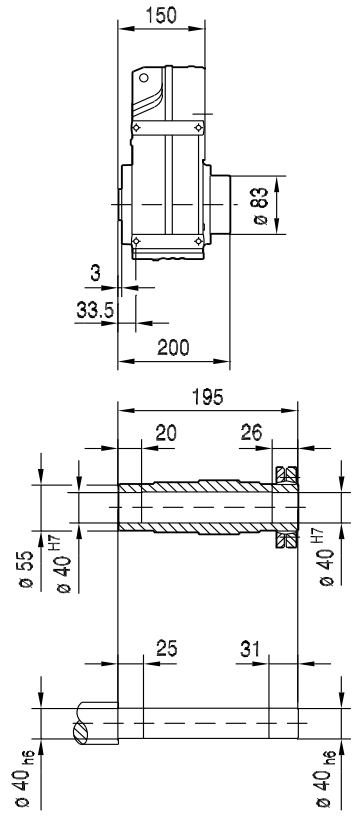

FV57B..

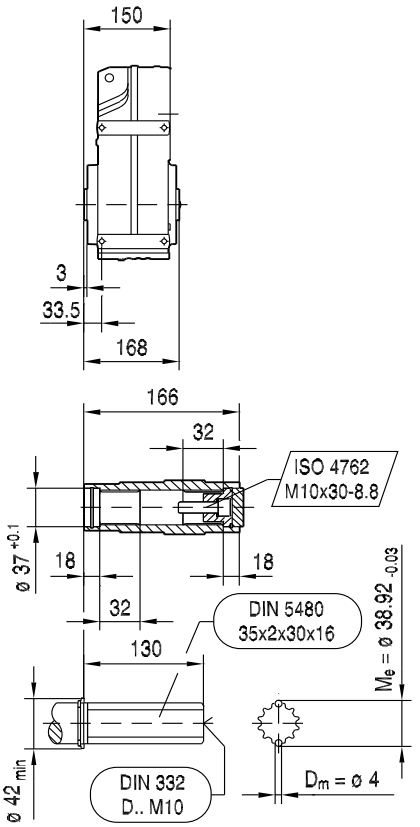

(→ 144)	CMP50M	CMP50L	CMP63S	CMP63M	CMP63L	CMP71S	CMP71M	CMP71L	CMP80S	CMP80M	CMP100S
AC	73	73	88	88	88	115	115	115	137	137	162
AD	86	86	92	92	92	102	102	102	134	134	146
ADS	86	86	92	92	92	104	104	104	137	137	147
L	399	438	394	444	494	387	412	462	427	465	463
LS	428	467	423	473	523	452	477	527	505	543	559
LB	178	217	173	223	273	166	191	241	206	244	242
LBS	207	246	202	252	302	231	256	306	284	322	338
XS	18	18	14	14	14	11	11	11	37	37	37

42 023 00 07

FF57..

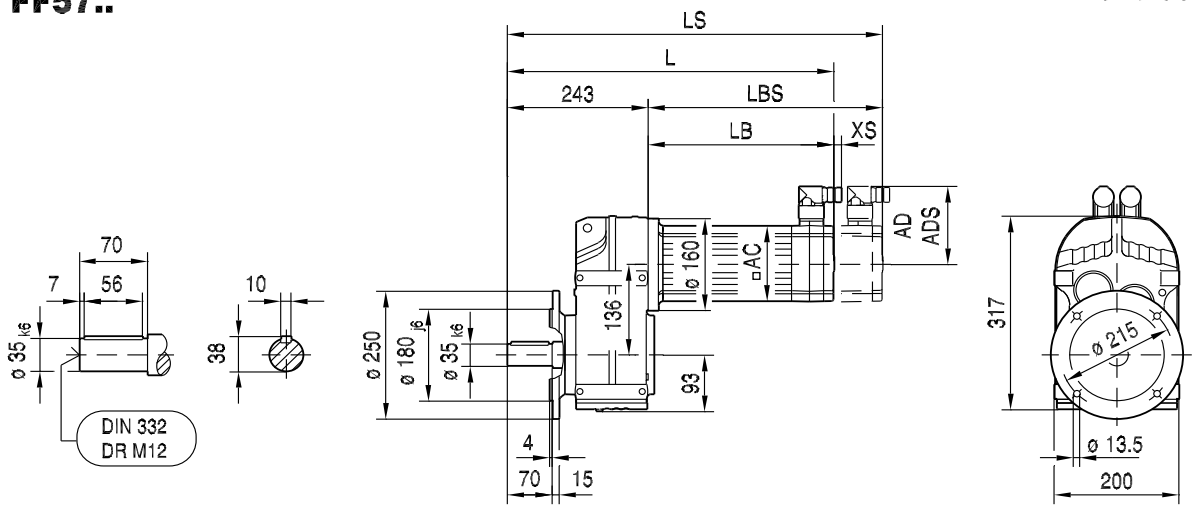

FAF57..

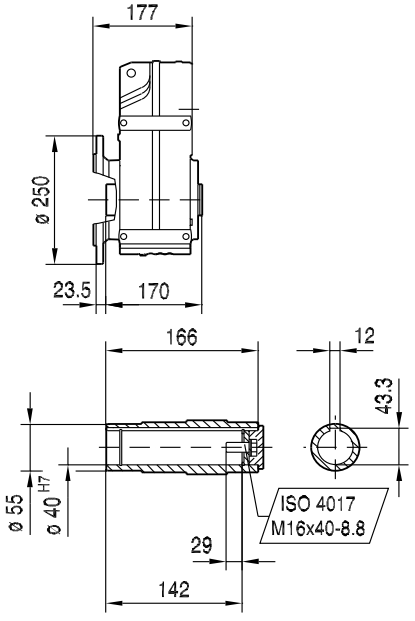

FHF57..

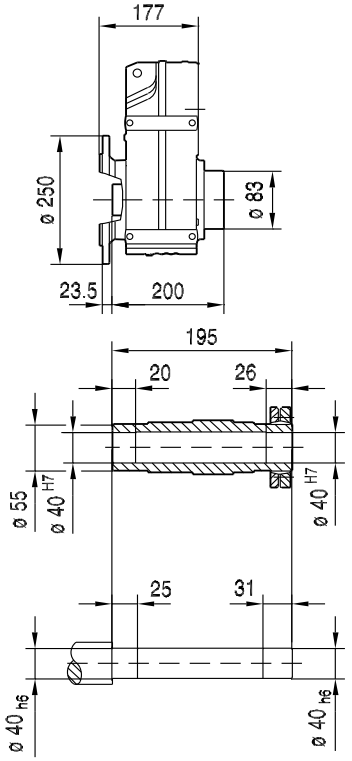

FVF57..

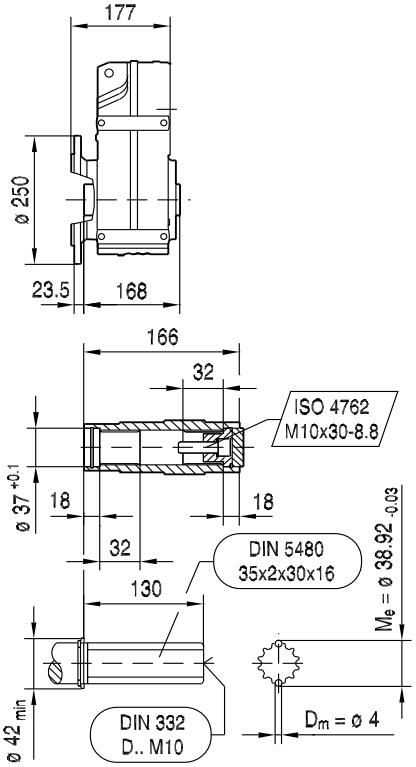

(→ 144)	CMP50M	CMP50L	CMP63S	CMP63M	CMP63L	CMP71S	CMP71M	CMP71L	CMP80S	CMP80M	CMP100S
AC	73	73	88	88	88	115	115	115	137	137	162
AD	86	86	92	92	92	102	102	102	134	134	146
ADS	86	86	92	92	92	104	104	104	137	137	147
L	421	460	416	466	516	409	434	484	449	487	485
LS	450	489	445	495	545	474	499	549	527	565	581
LB	178	217	173	223	273	166	191	241	206	244	242
LBS	207	246	202	252	302	231	256	306	284	322	338
XS	18	18	14	14	14	11	11	11	37	37	37

42 024 00 07

FA57..

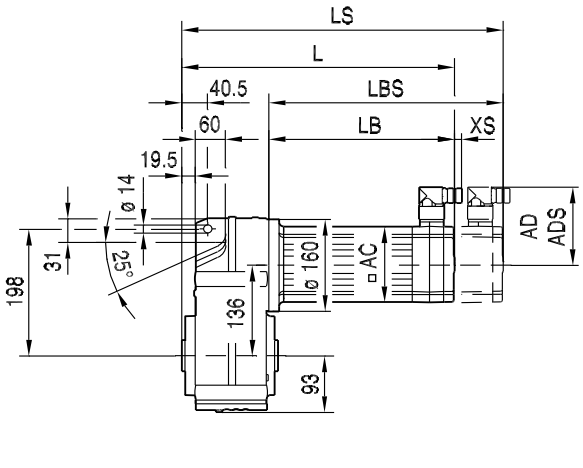

F.. /G

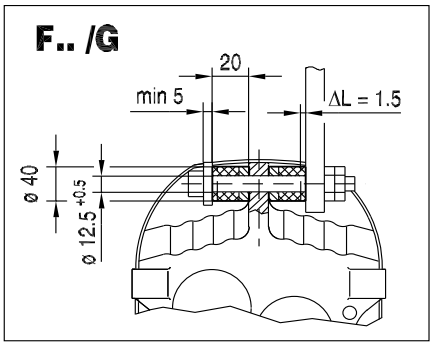

FA57..

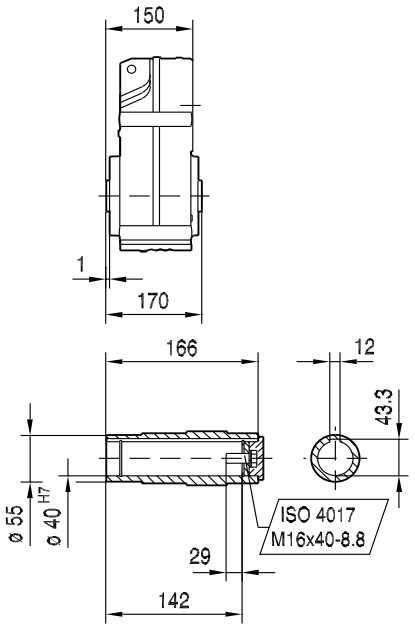

FH57..

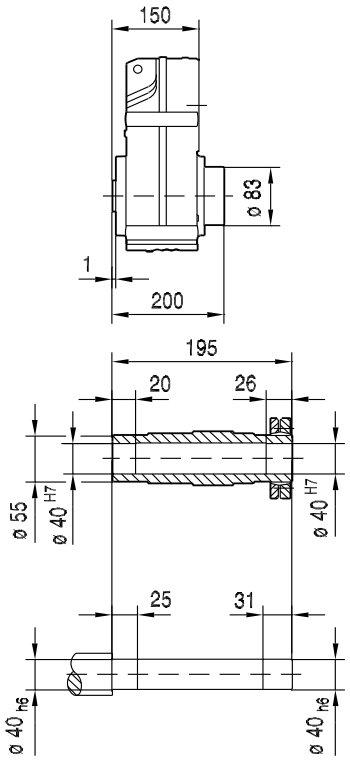

FV57..

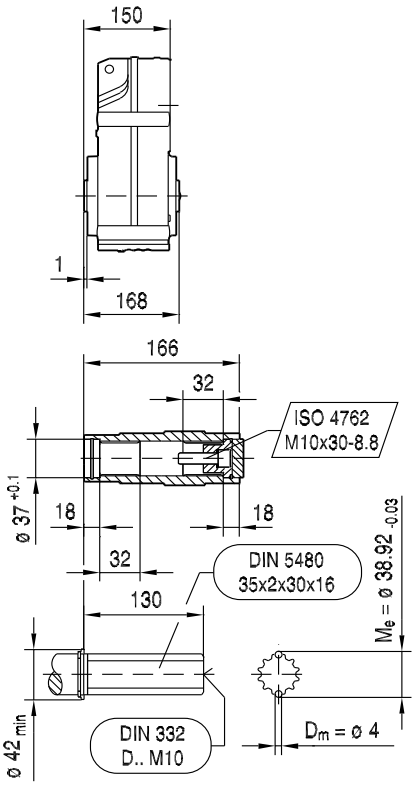

(→ 144)	CMP50M	CMP50L	CMP63S	CMP63M	CMP63L	CMP71S	CMP71M	CMP71L	CMP80S	CMP80M	CMP100S
AC	73	73	88	88	88	115	115	115	137	137	162
AD	86	86	92	92	92	102	102	102	134	134	146
ADS	86	86	92	92	92	104	104	104	137	137	147
L	328	367	323	373	423	316	341	391	356	394	392
LS	357	396	352	402	452	381	406	456	434	472	488
LB	178	217	173	223	273	166	191	241	206	244	242
LBS	207	246	202	252	302	231	256	306	284	322	338
XS	18	18	14	14	14	11	11	11	37	37	37

FAZ57..

42 025 00 07

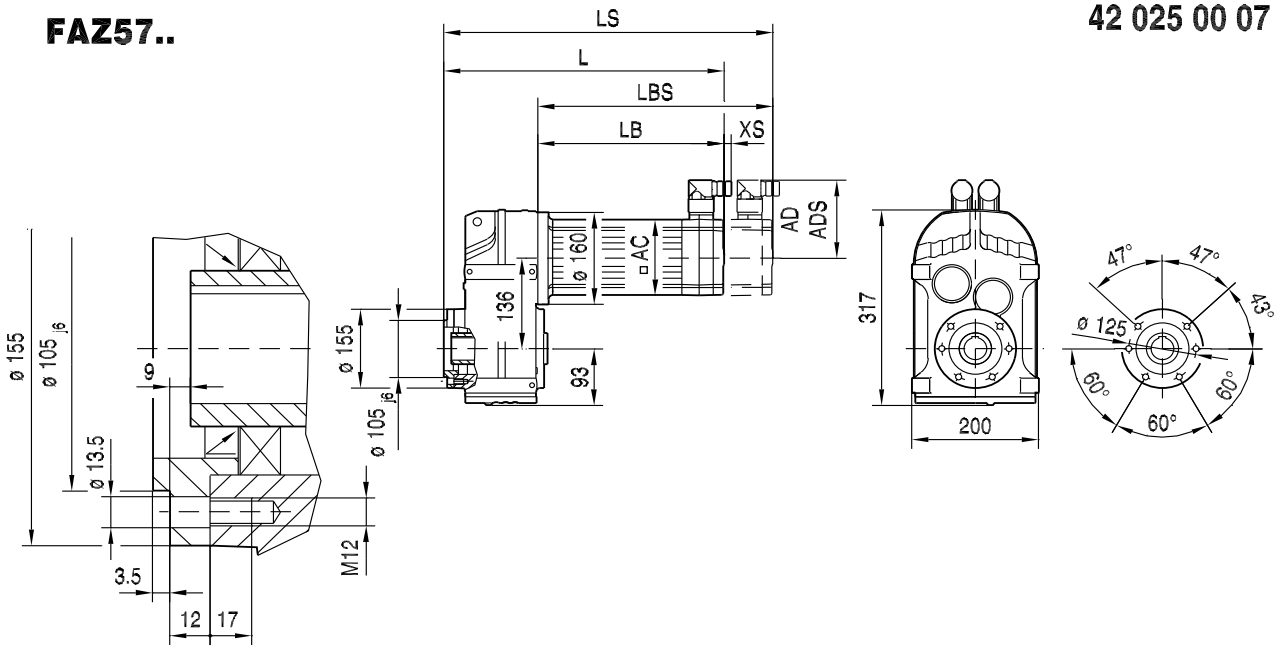

FAZ57..

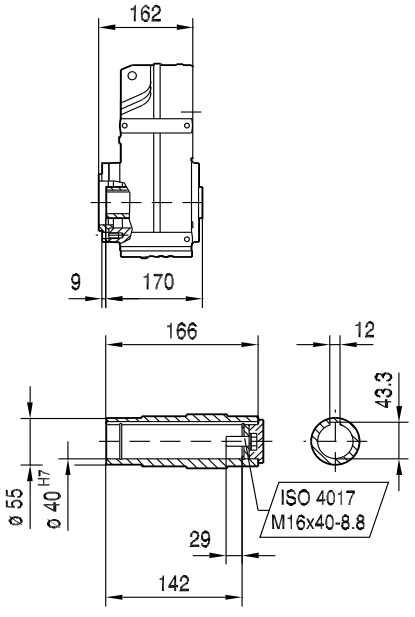

FHZ57..

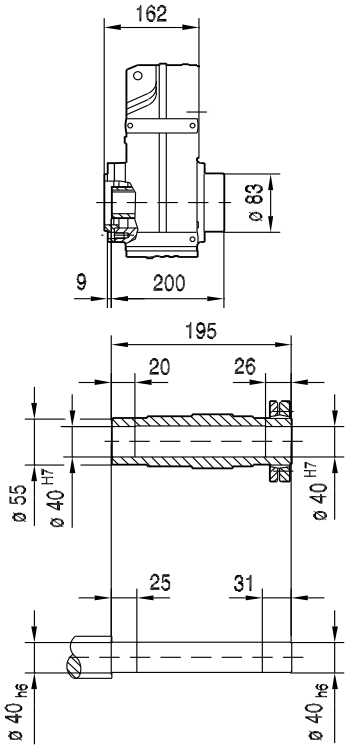

FVZ57..

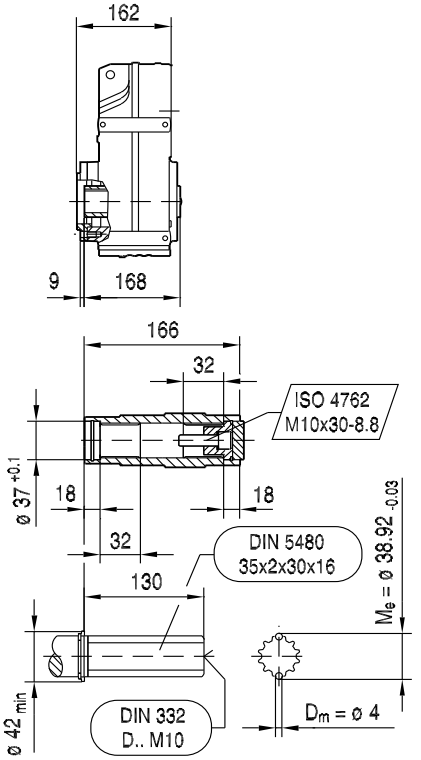

(→ 📖 144)	CMP50M	CMP50L	CMP63S	CMP63M	CMP63L	CMP71S	CMP71M	CMP71L	CMP80S	CMP80M	CMP100S
AC	73	73	88	88	88	115	115	115	137	137	162
AD	86	86	92	92	92	102	102	102	134	134	146
ADS	86	86	92	92	92	104	104	104	137	137	147
L	340	379	335	385	435	328	353	403	368	406	404
LS	369	408	364	414	464	393	418	468	446	484	500
LB	178	217	173	223	273	166	191	241	206	244	242
LBS	207	246	202	252	302	231	256	306	284	322	338
XS	18	18	14	14	14	11	11	11	37	37	37

FT57..

42 026 00 07

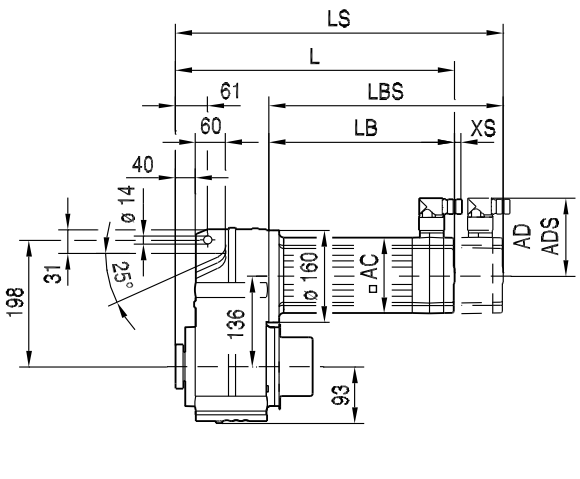

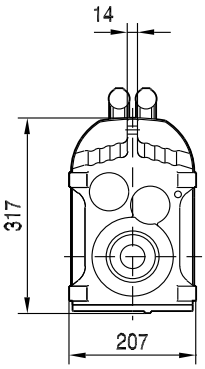

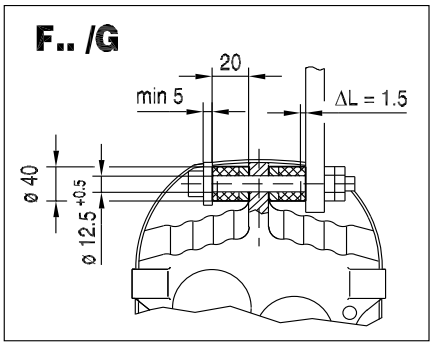

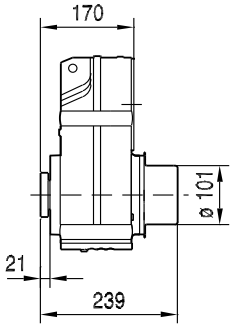

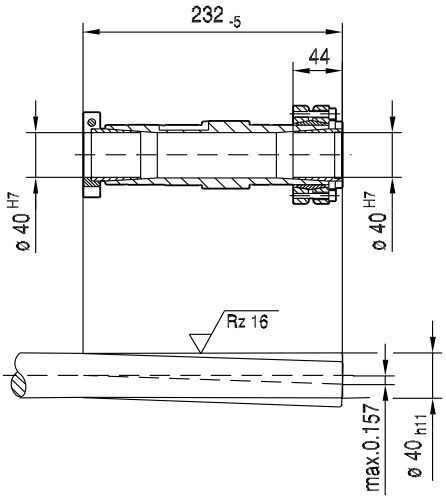

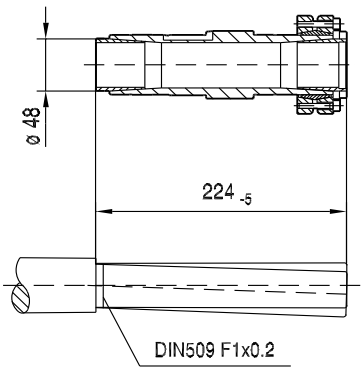

(→ 144)	CMP50M	CMP50L	CMP63S	CMP63M	CMP63L	CMP71S	CMP71M	CMP71L	CMP80S	CMP80M	CMP100S
AC	73	73	88	88	88	115	115	115	137	137	162
AD	86	86	92	92	92	102	102	102	134	134	146
ADS	86	86	92	92	92	104	104	104	137	137	147
L	348	387	343	393	443	336	361	411	376	414	412
LS	377	416	372	422	472	401	426	476	454	492	508
LB	178	217	173	223	273	166	191	241	206	244	242
LBS	207	246	202	252	302	231	256	306	284	322	338
XS	18	18	14	14	14	11	11	11	37	37	37



F..CMP
F..[mm]

9.2.5 F 67

M_{aDyn} [Nm]		CMP														
	i	50S	50M	50L	63S	63M	63L	71S	71M	71L	80S	80M	80L	100S	100M	100L
FA67 2	3.97		40	59	43	82	117	74	119	181	162	240	410	260	415	685
	4.66		47	70	50	97	137	87	139	210	190	280	480	305	485	>700
	5.25		52	78	57	109	155	98	157	235	210	315	540	345	545	>705
	5.95	30	60	90	65	125	177	112	180	270	245	365	620	395	625	>705
	6.78	34	68	101	73	141	200	126	200	305	275	410	700	445	>710	>710
	7.53	38	75	112	81	156	220	140	220	340	305	455		495		
	8.60	43	86	128	93	179	250	160	255	390	350	520		565		
	9.08	46	91	136	98	188	265	169	270	410	370	550		600		
	9.66		97	144	104	200	280	180	285	435	390	585	>920	635	>920	>920
	11.31		113	169	122	230	330	210	335	510	460	685	>920	745	>920	>920
	12.76		127	191	137	260	375	235	380	580	520	770	>920	840	>920	>920
	14.46	73	144	215	156	300	425	265	430	655	590	870	>920	>920	>920	>920
	16.48	83	165	245	177	340	485	305	490	745	670	>920	>920	>920	>920	>920
	18.29	92	183	270	197	375	535	340	545	830	745	>920		>920		
	20.90	105	205	310	225	430	615	385	620	>920	850	>920		>920		
	22.05	111	220	325	235	455	650	410	655	>920	900	>920		>920		
	25.13	127	250	375	270	520	740	465	750	>920	>920					
	27.41	138	270	405	295	565	800	510	810	>920	>920					
	32.08	162	320	475	345	665	>920	595	>920							
	36.30	183	360	540	390	750		675								
FA67 3	34.01	170	335	500	360	695	>920	625	>920	>920	>920	>920		>920		
	39.26	196	385	580	415	800	>920	720	>920	>920	>920	>920		>920		
	43.20	215	425	635	460	880	>920	795	>920	>920	>920	>920		>920		
	50.74	250	500	750	540	>920	>920	>920	>920	>920	>920	>920		>920		
	53.73	265	530	790	570	>920	>920	>920	>920	>920	>920	>920		>920		
	61.07	300	595	890	640	>920	>920	>920	>920	>920	>920					
	67.65	330	660	>920	710	>920	>920	>920	>920	>920	>920					
	79.76	390	780	>920	840	>920	>920	>920	>920							
	90.59	445	880	>920	>920	>920	>920	>920	>920	>920	>920	>920		>920		
	95.94	470	>920	>920	>920	>920	>920	>920	>920	>920	>920	>920		>920		
	109.04	535	>920	>920	>920	>920	>920	>920	>920	>920	>920					
	120.79	590	>920	>920	>920	>920	>920	>920	>920	>920	>920					
	142.40	695	>920	>920	>920	>920	>920	>920	>920							
	162.31	790	>920	>920	>920	>920		>920								
	170.85	820	>920	>920	>920	>920		>920								
	195.39	>920	>920		>920											
	228.99	>920														

→ 144

m [kg]		CMP														
	s	50S	50M	50L	63S	63M	63L	71S	71M	71L	80S	80M	80L	100S	100M	100L
FA67	2	30	31	32	32	33	35	35	36	39	41	43	48	50	54	63
FA67	3	31	32	33	33	35	36	36	38	40	43	45	49	51	55	64
FAF: + 6.3 kg / F: + 2.8 kg / FF: + 8.9 kg																



CMP..	i	n_{epk} [1/min]	η [%]	c_{TG} FA [Nm/']	FAF [Nm/']	F [Nm/']	FF [Nm/']	φ /R [']
FA67 2	3.97	4500	97	129	129	68	62	10
	4.66	4500	97	129	129	68	62	9
	5.25	4500	97	129	129	68	62	9
	5.95	4500	98	129	129	68	62	9
	6.78	4500	97	129	129	68	62	9
	7.53	4500	97	129	129	68	62	8
	8.60	4500	97	129	129	68	62	8
	9.08	4500	97	129	129	68	62	8
	9.66	4500	97	173	173	79	71	6
	11.31	4500	97	173	173	79	71	6
	12.76	4500	97	173	173	79	71	6
	14.46	4500	97	173	173	79	71	6
	16.48	4500	97	173	173	79	71	6
	18.29	4500	97	173	173	79	71	6
	20.90	4500	97	173	173	79	71	5
	22.05	4500	97	173	173	79	71	5
	25.13	4500	97	173	173	79	71	5
	27.41	4500	97	173	173	79	71	5
	32.08	4500	97	173	173	79	71	5
	36.30	4500	97	173	173	79	71	5
FA67 3	34.01	4500	96	187	187	82	74	6
	39.26	4500	96	187	187	82	74	6
	43.20	4500	96	187	187	82	74	6
	50.74	4500	96	187	187	82	74	6
	53.73	4500	96	187	187	82	74	6
	61.07	4500	95	187	187	82	74	6
	67.65	4500	95	187	187	82	74	6
	79.76	4500	95	187	187	82	74	6
	90.59	4500	95	189	189	82	74	6
	95.94	4500	95	189	189	82	74	6
	109.04	4500	95	189	189	82	74	6
	120.79	4500	94	189	189	82	74	6
	142.40	4500	94	189	189	82	74	6
	162.31	4500	94	189	189	82	74	6
	170.85	4500	93	189	189	82	74	6
	195.39	4500	93	189	189	82	74	6
	228.99	4500	93	189	189	82	74	6



F..CMP
F..[mm]

CMP..							F_{Ramax}				F_{Rapk}			
n_e = 1400	i	M_{amax} [Nm]	M_{apk} [Nm]	$M_{aNotaus}$ [Nm]	n_{ak} [1/min]	J_G 10^{-4} [kgm^2]	FA [N]	FAF [N]	F [N]	FF [N]	FA [N]	FAF [N]	F [N]	FF [N]
	3.97	500	695	850	403	16	1220	1220	8390	8620	13000	13000	11300	11300
	4.66	560	700	952	322	12	1020	1020	8590	8860	13000	13000	11300	11300
	5.25	590	705	1003	286	10.0	1010	1010	8850	9140	13000	13000	11200	11200
	5.95	610	705	1037	286	8.0	1090	1090	9200	9500	13000	13000	11200	11200
	6.78	620	710	1054	295	6.3	1280	1280	9660	9950	13000	13000	11200	11200
	7.53	610	715	1037	332	5.5	1570	1570	10100	10400	13000	13000	11200	11200
	8.60	570	715	969	442	4.4	2180	2180	10900	11200	13000	13000	11200	11200
	9.08	530	715	901	573	4.0	2620	2620	11400	11600	13000	13000	11200	11200
	9.66	820	920	1394	186	8.5	1580	1580	10300	10300	13000	13000	9310	9310
FA67	11.31	820	920	1394	203	6.7	1960	1960	10300	10300	13000	13000	9310	9310
2	12.76	820	920	1394	212	5.6	2260	2260	10300	10300	13000	13000	9310	9310
	14.46	820	920	1394	228	4.6	2580	2580	10300	10300	13000	13000	9310	9310
	16.48	820	920	1394	237	3.8	2940	2940	10300	10300	13000	13000	9310	9310
	18.29	820	920	1394	252	3.4	3230	3230	10300	10300	13000	13000	9310	9310
	20.90	820	920	1394	263	2.7	3620	3620	10300	10300	13000	13000	9310	9310
	22.05	820	920	1394	268	2.5	3780	3780	10300	10300	13000	13000	9310	9310
	25.13	820	920	1394	275	2.0	4190	4190	10300	10300	13000	13000	9310	9310
	27.41	820	920	1394	255	1.7	4470	4470	10300	10300	13000	13000	9310	9310
	32.08	820	920	1394	218	1.4	5000	5000	10300	10300	13000	13000	9310	9310
	36.30	820	920	1394	193	0.98	5440	5440	10300	10300	13000	13000	9310	9310
	34.01	740	920	1258	44	2.8	5730	5730	11000	11000	13000	13000	9310	9310
	39.26	780	920	1326	38	2.2	5980	5980	10700	10700	13000	13000	9310	9310
	43.20	820	920	1394	35	1.9	6080	6080	10300	10300	13000	13000	9310	9310
	50.74	820	920	1394	34	1.6	6710	6710	10300	10300	13000	13000	9310	9310
	53.73	820	920	1394	34	1.4	6940	6940	10300	10300	13000	13000	9310	9310
	61.07	820	920	1394	34	1.1	7480	7480	10300	10300	13000	13000	9310	9310
	67.65	820	920	1394	35	0.97	7930	7930	10300	10300	13000	13000	9310	9310
FA67	79.76	820	920	1394	36	0.76	8680	8680	10300	10300	13000	13000	9310	9310
3	90.59	820	920	1394	56	1.4	9290	9290	10300	10300	13000	13000	9310	9310
	95.94	820	920	1394	56	1.2	9570	9570	10300	10300	13000	13000	9310	9310
	109.04	820	920	1394	57	0.98	10200	10200	10300	10300	13000	13000	9310	9310
	120.79	820	920	1394	57	0.85	10800	10800	10300	10300	13000	13000	9310	9310
	142.40	820	920	1394	49	0.68	11700	11700	10300	10300	13000	13000	9310	9310
	162.31	820	920	1394	43	0.47	12400	12400	10300	10300	13000	13000	9310	9310
	170.85	820	920	1394	41	0.42	12700	12700	10300	10300	13000	13000	9310	9310
	195.39	820	920	1394	36	0.34	13000	13000	10300	10300	13000	13000	9310	9310
	228.99	820	920	1394	31	0.27	13000	13000	10300	10300	13000	13000	9310	9310

F67..

42 027 00 07

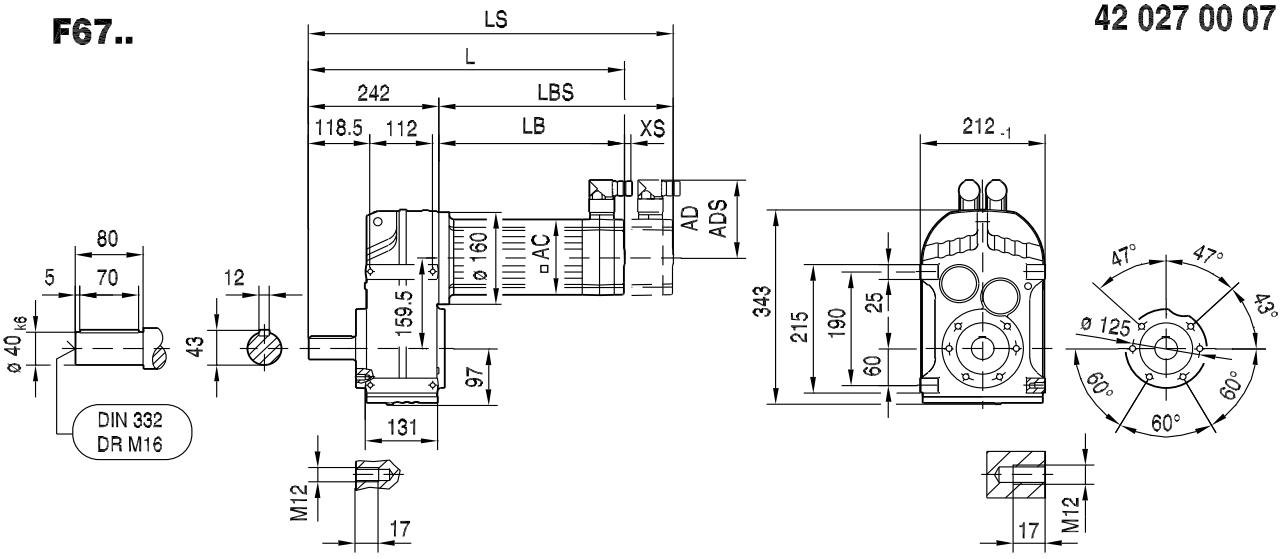

FA67B..

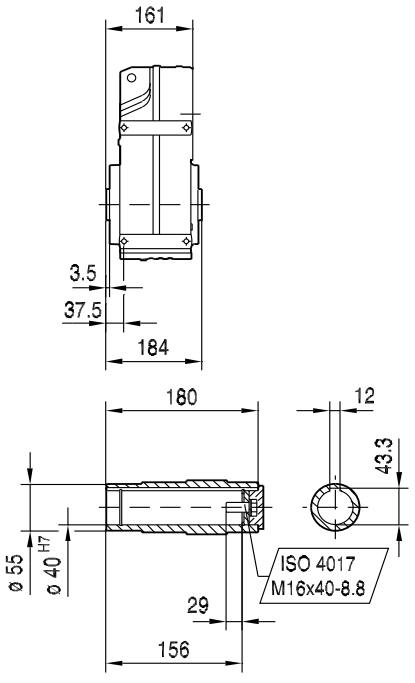

FH67B..

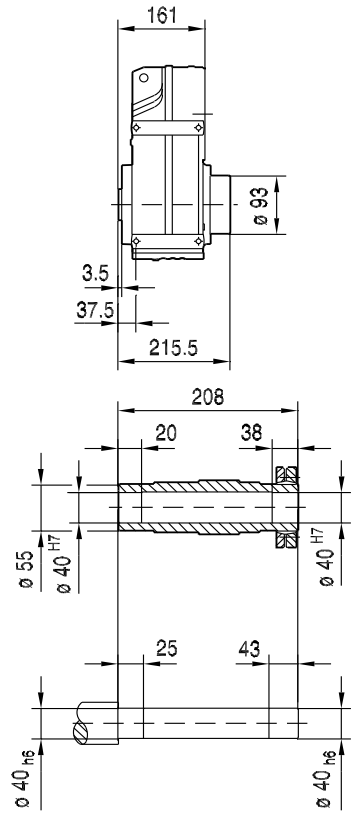

FV67B..

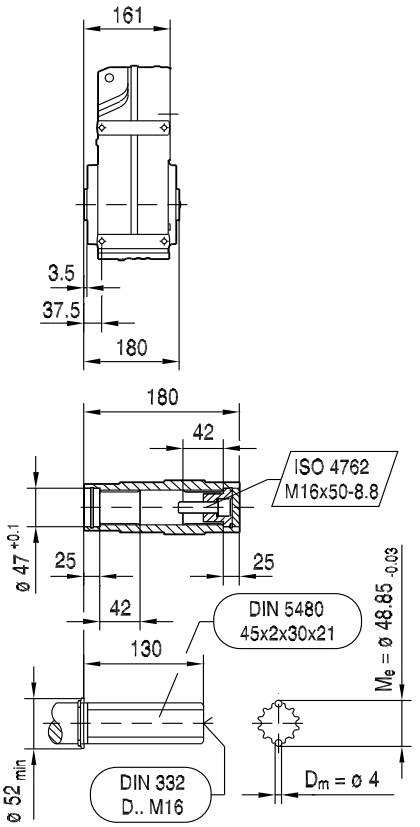

(→ 144)	CMP63M	CMP63L	CMP71S	CMP71M	CMP71L	CMP80S	CMP80M	CMP80L	CMP100S	CMP100M	CMP100L
AC	88	88	115	115	115	137	137	137	162	162	162
AD	92	92	102	102	102	134	134	134	146	146	146
ADS	92	92	104	104	104	137	137	137	147	147	147
L	465	515	408	433	483	448	486	550	484	521	601
LS	494	544	473	498	548	526	564	628	580	617	697
LB	223	273	166	191	241	206	244	308	242	279	359
LBS	252	302	231	256	306	284	322	386	338	375	455
XS	14	14	11	11	11	37	37	37	37	37	37

42 028 00 07

FF67..

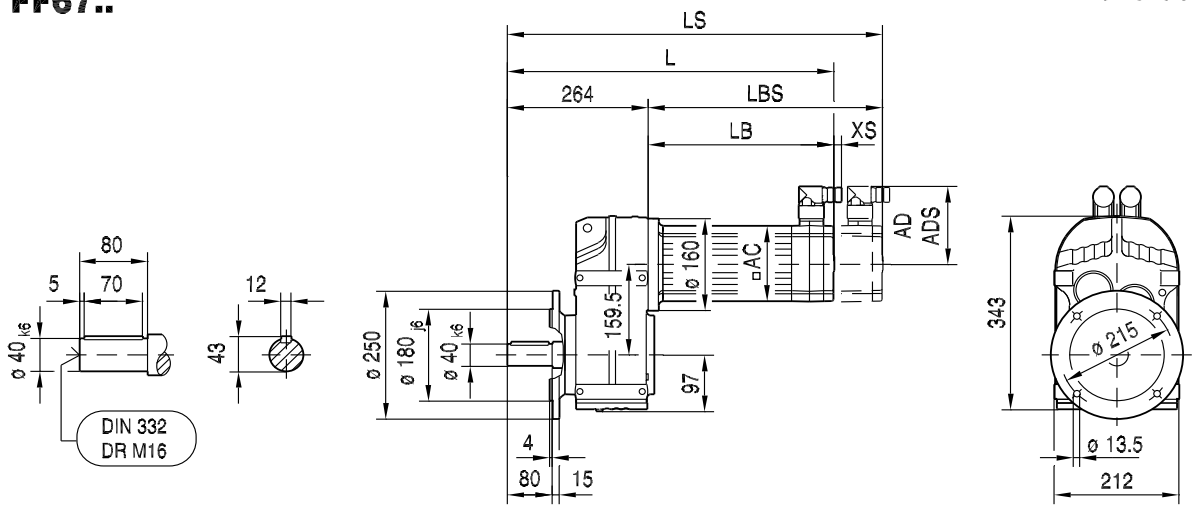

FAF67..

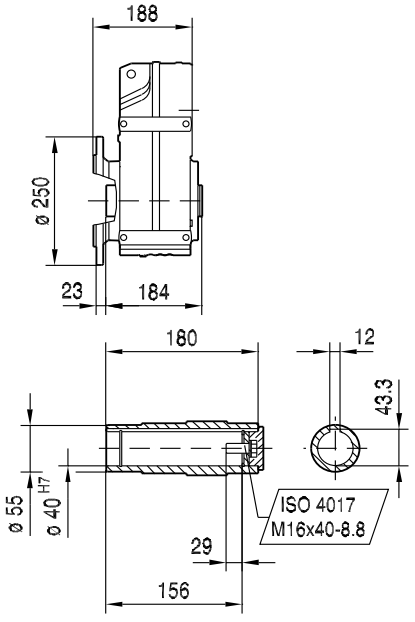

FHF67..

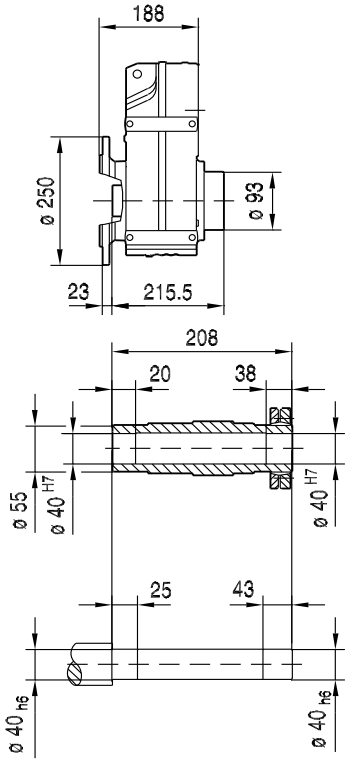

FVF67..

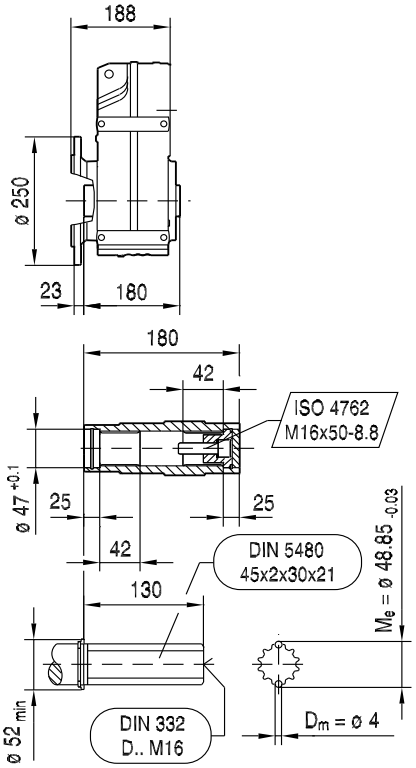

(→ 📖 144)	CMP63M	CMP63L	CMP71S	CMP71M	CMP71L	CMP80S	CMP80M	CMP80L	CMP100S	CMP100M	CMP100L
AC	88	88	115	115	115	137	137	137	162	162	162
AD	92	92	102	102	102	134	134	134	146	146	146
ADS	92	92	104	104	104	137	137	137	147	147	147
L	487	537	430	455	505	470	508	572	506	543	623
LS	516	566	495	520	570	548	586	650	602	639	719
LB	223	273	166	191	241	206	244	308	242	279	359
LBS	252	302	231	256	306	284	322	386	338	375	455
XS	14	14	11	11	11	37	37	37	37	37	37

42 029 00 07

FA67..

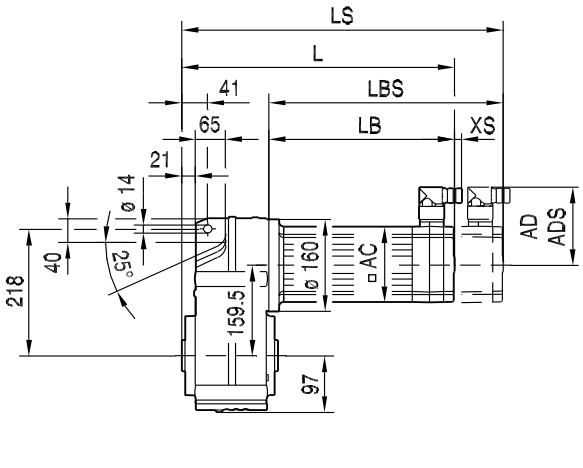

F.. /G

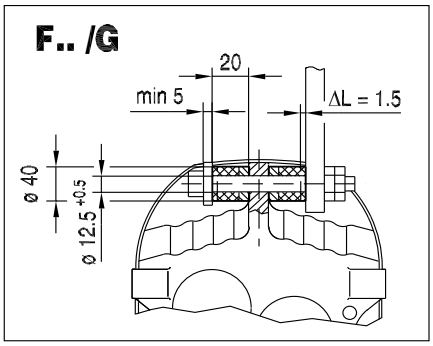

FA67..

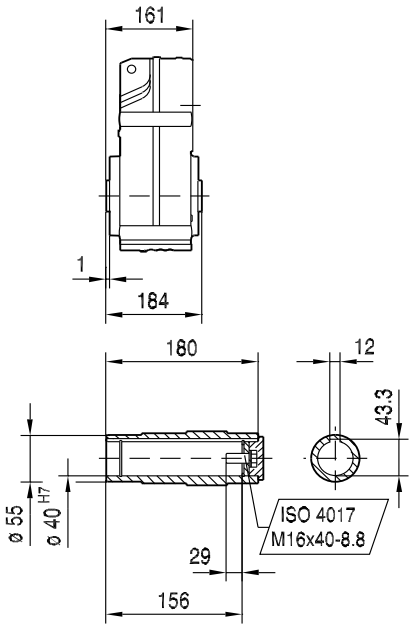

FH67..

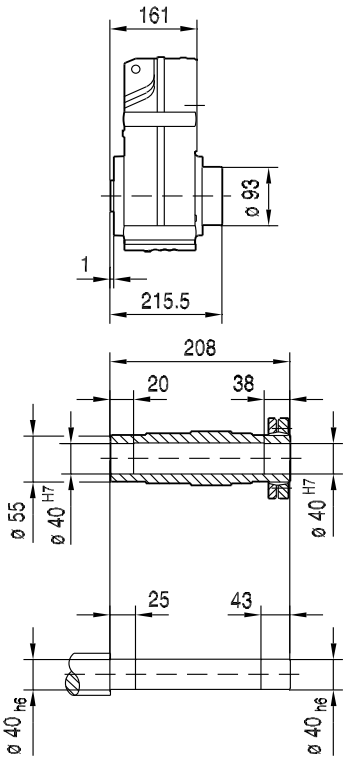

FV67..

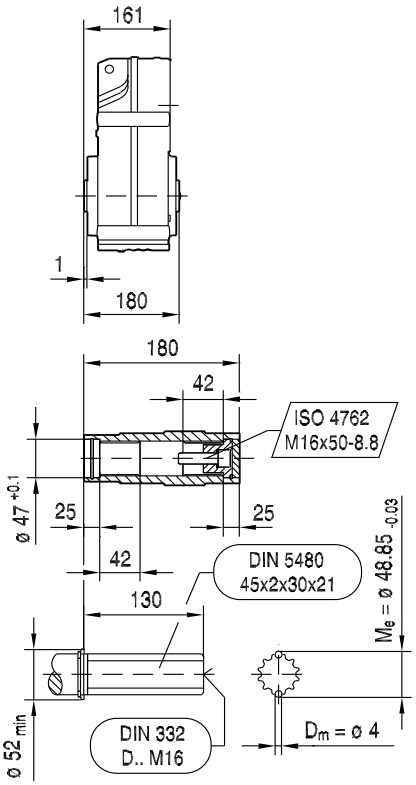

(→ 144)	CMP63M	CMP63L	CMP71S	CMP71M	CMP71L	CMP80S	CMP80M	CMP80L	CMP100S	CMP100M	CMP100L
AC	88	88	115	115	115	137	137	137	162	162	162
AD	92	92	102	102	102	134	134	134	146	146	146
ADS	92	92	104	104	104	137	137	137	147	147	147
L	384	434	327	352	402	367	405	469	403	440	520
LS	413	463	392	417	467	445	483	547	499	536	616
LB	223	273	166	191	241	206	244	308	242	279	359
LBS	252	302	231	256	306	284	322	386	338	375	455
XS	14	14	11	11	11	37	37	37	37	37	37

FAZ67..

42 030 00 07

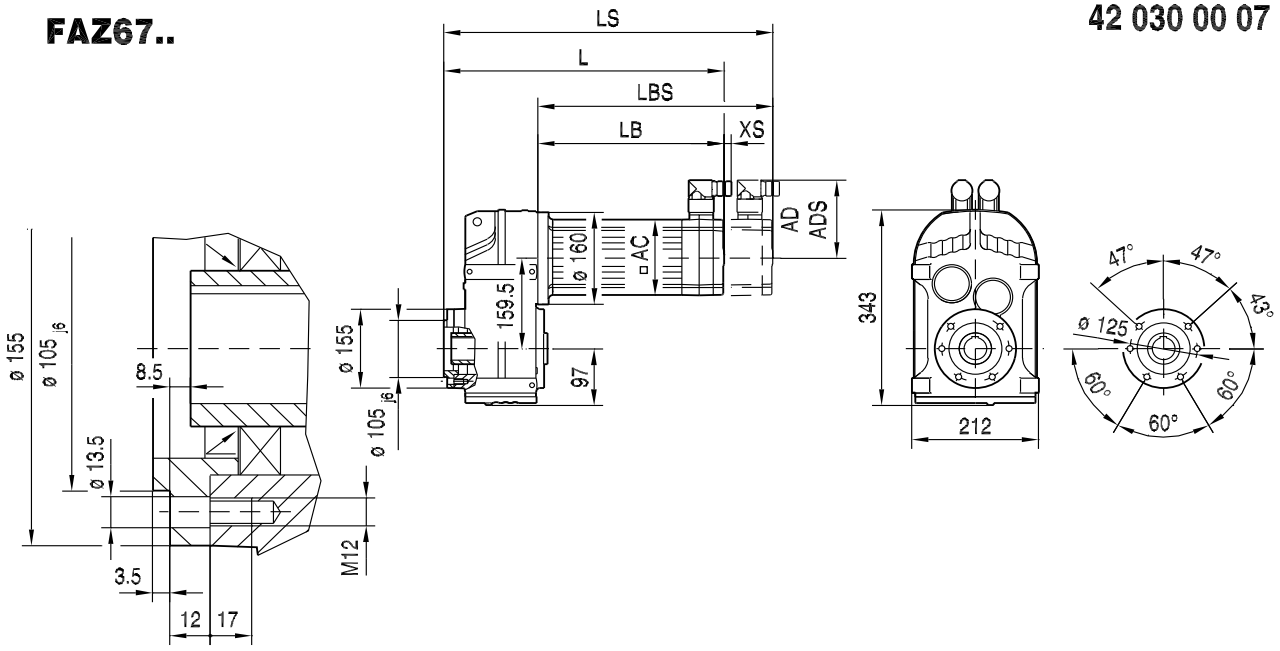

FAZ67..

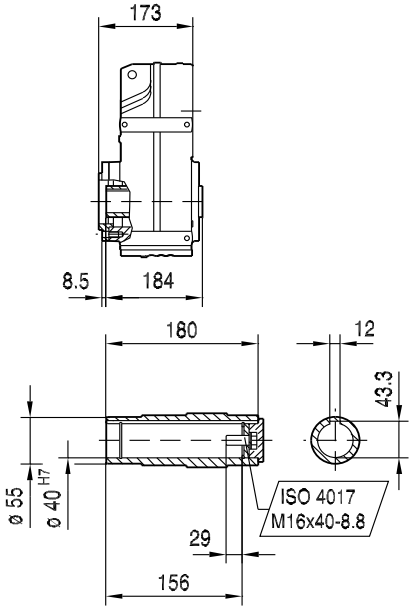

FHZ67..

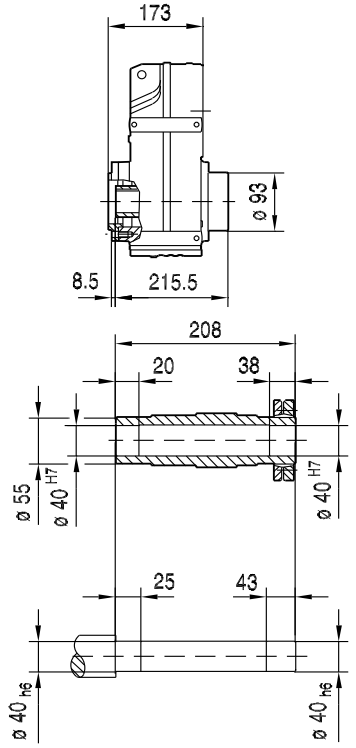

FVZ67..

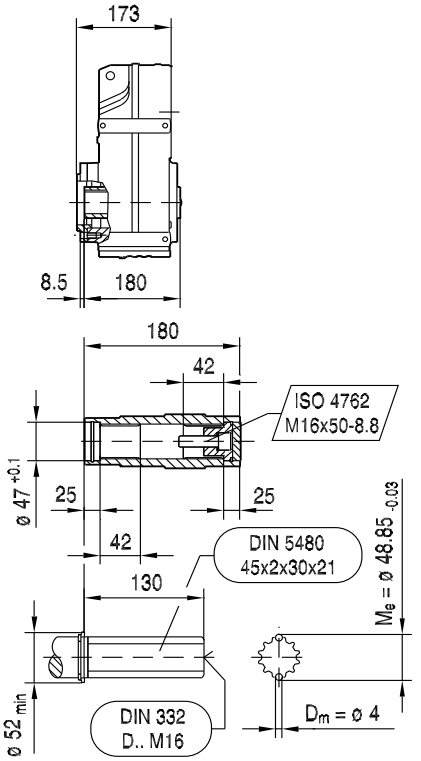

(→ 144)	CMP63M	CMP63L	CMP71S	CMP71M	CMP71L	CMP80S	CMP80M	CMP80L	CMP100S	CMP100M	CMP100L
AC	88	88	115	115	115	137	137	137	162	162	162
AD	92	92	102	102	102	134	134	134	146	146	146
ADS	92	92	104	104	104	137	137	137	147	147	147
L	396	446	339	364	414	379	417	481	415	452	532
LS	425	475	404	429	479	457	495	559	511	548	628
LB	223	273	166	191	241	206	244	308	242	279	359
LBS	252	302	231	256	306	284	322	386	338	375	455
XS	14	14	11	11	11	37	37	37	37	37	37

FT67..

42 031 00 07

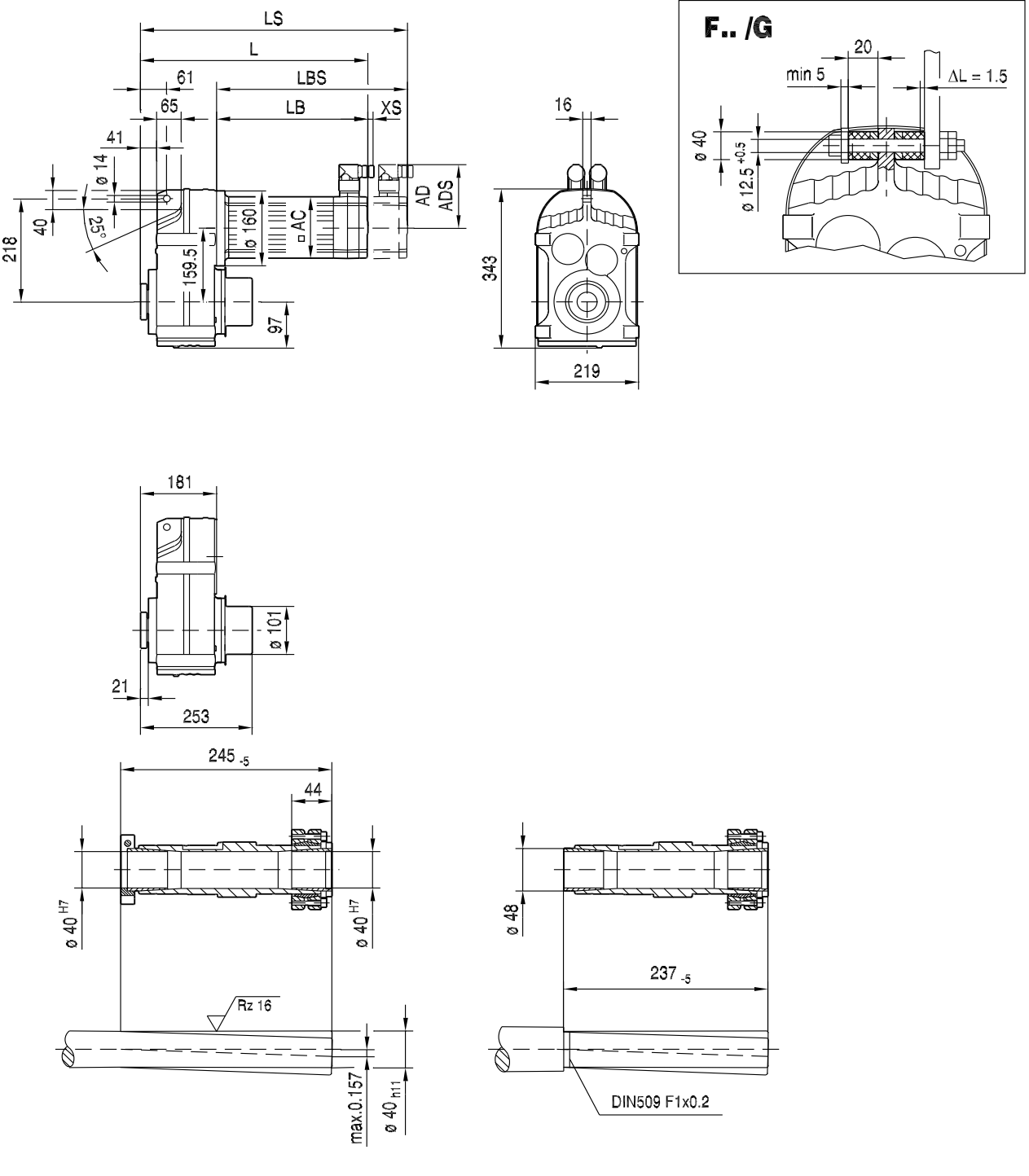

(→ 144)	CMP63M	CMP63L	CMP71S	CMP71M	CMP71L	CMP80S	CMP80M	CMP80L	CMP100S	CMP100M	CMP100L
AC	88	88	115	115	115	137	137	137	162	162	162
AD	92	92	102	102	102	134	134	134	146	146	146
ADS	92	92	104	104	104	137	137	137	147	147	147
L	404	454	347	372	422	387	425	489	423	460	540
LS	433	483	412	437	487	465	503	567	519	556	636
LB	223	273	166	191	241	206	244	308	242	279	359
LBS	252	302	231	256	306	284	322	386	338	375	455
XS	14	14	11	11	11	37	37	37	37	37	37



9.2.6 F 77

M_{aDyn} [Nm]		CMP											
	i	63S	63M	63L	71S	71M	71L	80S	80M	80L	100S	100M	100L
FA77 2	4.28			126		128	195	175	255	440	280	445	740
	5.16			152		154	230	210	310	535	340	540	890
	5.76	62	120	170	107	172	260	235	345	595	380	600	990
	6.64	71	138	196	124	198	300	270	400	685	435	695	1150
	7.39	80	153	215	138	220	335	300	445	765	485	770	1280
	8.26	89	171	240	154	245	375	335	500	850	545	860	>1330
	9.30	100	193	270	173	275	420	375	560	960	615	970	>1330
	10.93			320		325	495	445	660	1130	720	1140	>1530
	12.20	131	250	355	225	360	555	495	740	1260	800	1270	>1530
	14.06	151	290	410	260	420	635	570	850	1450	930	1470	>1530
	15.64	168	320	460	290	465	710	635	940	>1530	1030	>1530	>1530
	17.49	188	360	515	325	520	795	710	1060	>1530	1150	>1530	>1530
	19.70	210	405	580	365	585	890	800	1190	>1530	1300	>1530	>1530
	21.43	230	440	630	395	640	970	870	1300		1410		
	25.50	270	525	750	470	760	1160	1040	>1530		>1530		
	28.75	305	595	840	535	850	1300	1170					
	31.51	335	650	920	585	940	1430	1280					
	36.58	390	755	1070	680	1090							
FA77 3	25.54	270	520	745	470	755	1140	1030	>1530	>1530	>1530	>1530	>1530
	29.91	315	610	870	550	880	1340	1200	>1530	>1530	>1530	>1530	>1530
	33.74	355	690	980	620	990	1510	1360	>1530	>1530	>1530	>1530	>1530
	38.23	405	785	1110	700	1130	>1530	>1530	>1530	>1530	>1530	>1530	>1530
	43.58	460	890	1270	800	1280	>1530	>1530	>1530	>1530	>1530	>1530	>1530
	48.37	515	990	1410	890	1430	>1530	>1530	>1530		>1530		
	55.27	585	1130	>1530	1010	>1530	>1530	>1530	>1530		>1530		
	58.32	620	1190	>1530	1070	>1530	>1530	>1530	>1530		>1530		
	66.46	700	1350	>1530	1210	>1530	>1530	>1530					
	72.50	760	1470	>1530	1320	>1530	>1530	>1530					
	75.02	790	1520	>1530	1360	>1530	>1530	>1530	>1530		>1530		
	85.52	900	>1530	>1530	>1530	>1530	>1530	>1530	>1530		>1530		
	94.93	1000	>1530	>1530	>1530	>1530	>1530	>1530	>1530		>1530		
	108.46	1140	>1530	>1530	>1530	>1530	>1530	>1530	>1530		>1530		
	114.45	1200	>1530	>1530	>1530	>1530	>1530	>1530	>1530		>1530		
	130.42	1370	>1530	>1530	>1530	>1530	>1530	>1530					
	142.27	1480	>1530	>1530	>1530	>1530	>1530	>1530					
	166.47	>1530	>1530	>1530	>1530	>1530							
	188.40	>1530	>1530		>1530								
	198.31	>1530	>1530		>1530								
	225.79	>1530											
	262.93												
	281.71												

→ 📖 144

m [kg]		CMP											
	s	63S	63M	63L	71S	71M	71L	80S	80M	80L	100S	100M	100L
FA77	2	54	55	57	58	60	62	63	65	69	70	74	83
FA77	3	55	56	58	60	61	63	65	67	71	71	76	84
FAF: + 6.6 kg / F: + 3.8 kg / FF: + 14.4 kg													

CMP..	i	n_{epk} [1/min]	η [%]	c_{TG} FA [Nm/']	FAF [Nm/']	F [Nm/']	FF [Nm/']	φ /R [']
	4.28	4500	97	263	263	132	106	8
	5.16	4500	97	263	263	132	106	8
	5.76	4500	97	263	263	132	106	8
	6.64	4500	97	263	263	132	106	8
	7.39	4500	97	263	263	132	106	7
	8.26	4500	97	263	263	132	106	7
	9.30	4500	97	263	263	132	106	7
	10.93	4500	97	351	351	151	118	6
FA77	12.20	4500	97	351	351	151	118	5
2	14.06	4500	97	351	351	151	118	5
	15.64	4500	97	351	351	151	118	5
	17.49	4500	97	351	351	151	118	5
	19.70	4500	97	351	351	151	118	5
	21.43	4500	97	351	351	151	118	5
	25.50	4500	97	351	351	151	118	5
	28.75	4500	97	351	351	151	118	5
	31.51	4500	97	351	351	151	118	5
	36.58	4500	97	351	351	151	118	5
	25.54	4500	96	388	388	157	122	6
	29.91	4500	96	388	388	157	122	6
	33.74	4500	96	388	388	157	122	6
	38.23	4500	96	388	388	157	122	6
	43.58	4500	96	388	388	157	122	6
	48.37	4500	96	388	388	157	122	6
	55.27	4500	96	388	388	157	122	6
	58.32	4500	96	388	388	157	122	6
	66.46	4500	95	388	388	157	122	6
	72.50	4500	95	388	388	157	122	6
FA77	75.02	4500	95	394	394	158	123	6
3	85.52	4500	95	394	394	158	123	6
	94.93	4500	95	394	394	158	123	5
	108.46	4500	95	394	394	158	123	5
	114.45	4500	95	394	394	158	123	5
	130.42	4500	95	394	394	158	123	5
	142.27	4500	94	394	394	158	123	5
	166.47	4500	94	394	394	158	123	5
	188.40	4500	94	394	394	158	123	5
	198.31	4500	94	394	394	158	123	5
	225.79	4500	93	394	394	158	123	5
	262.93	4500	93	394	394	158	123	5
	281.71	4500	92	394	394	158	123	5



F..CMP
F..[mm]

CMP..							F_{Ramax}				F_{Rapk}			
n_e = 1400	i	M_{amax} [Nm]	M_{apk} [Nm]	$M_{aNotaus}$ [Nm]	n_{ak} [1/min]	J_G 10^{-4} [kgm^2]	FA [N]	FAF [N]	F [N]	FF [N]	FA [N]	FAF [N]	F [N]	FF [N]
FA77 2	4.28	1010	1310	1717	327	42	630	630	10200	10900	20000	20000	16900	17400
	5.16	1080	1320	1836	271	31	640	640	10700	11500	20000	20000	16800	17400
	5.76	1080	1320	1836	295	26	930	930	11300	12000	20000	20000	16800	17400
	6.64	1080	1320	1836	346	20	1310	1310	12000	12700	20000	20000	16800	17400
	7.39	1080	1330	1836	365	17	1610	1610	12500	13300	20000	20000	16800	17400
	8.26	1080	1330	1836	400	14	1940	1940	13100	13900	20000	20000	16800	17400
	9.30	1080	1330	1836	430	12	2300	2300	13800	14600	20000	20000	16800	17400
	10.93	1500	1530	2550	183	19	2080	2080	14200	15100	20000	20000	15500	17000
	12.20	1500	1530	2550	205	16	2450	2450	14900	15800	20000	20000	15500	17000
	14.06	1500	1530	2550	220	13	2940	2940	15700	16700	20000	20000	15500	17000
	15.64	1500	1530	2550	237	11	3330	3330	15700	17100	20000	20000	15500	17000
	17.49	1500	1530	2550	252	9.5	3750	3750	15700	17100	20000	20000	15500	17000
	19.70	1500	1530	2550	264	7.9	4220	4220	15700	17100	20000	20000	15500	17000
	21.43	1500	1530	2550	275	7.1	4560	4560	15700	17100	20000	20000	15500	17000
	25.50	1500	1530	2550	275	5.5	5300	5300	15700	17100	20000	20000	15500	17000
	28.75	1430	1530	2431	243	4.4	6190	6190	16200	17300	20000	20000	15500	17000
	31.51	1380	1530	2346	222	3.8	6870	6870	16500	17500	20000	20000	15500	17000
	36.58	1110	1530	1887	191	3.0	8990	8990	17900	18300	20000	20000	15500	17000
FA77 3	25.54	1450	1530	2465	59	10	5560	5560	16100	17300	20000	20000	15500	17000
	29.91	1500	1530	2550	50	7.8	6010	6010	15700	17100	20000	20000	15500	17000
	33.74	1500	1530	2550	50	6.4	6580	6580	15700	17100	20000	20000	15500	17000
	38.23	1500	1530	2550	50	5.2	7190	7190	15700	17100	20000	20000	15500	17000
	43.58	1500	1530	2550	50	4.3	7850	7850	15700	17100	20000	20000	15500	17000
	48.37	1500	1530	2550	52	3.8	8410	8410	15700	17100	20000	20000	15500	17000
	55.27	1500	1530	2550	52	3.0	9140	9140	15700	17100	20000	20000	15500	17000
	58.32	1500	1530	2550	51	2.8	9450	9450	15700	17100	20000	20000	15500	17000
	66.46	1500	1530	2550	53	2.2	10200	10200	15700	17100	20000	20000	15500	17000
	72.50	1500	1530	2550	52	1.9	10700	10700	15700	17100	20000	20000	15500	17000
	75.02	1500	1530	2550	53	4.0	11000	11000	15700	17100	20000	20000	15500	17000
	85.52	1500	1530	2550	53	3.3	11800	11800	15700	17100	20000	20000	15500	17000
	94.93	1500	1530	2550	54	3.0	12500	12500	15700	17100	20000	20000	15500	17000
	108.46	1500	1530	2550	53	2.5	13400	13400	15700	17100	20000	20000	15500	17000
	114.45	1500	1530	2550	54	2.3	13800	13800	15700	17100	20000	20000	15500	17000
	130.42	1500	1530	2550	54	1.9	14800	14800	15700	17100	20000	20000	15500	17000
	142.27	1500	1530	2550	49	1.6	15400	15400	15700	17100	20000	20000	15500	17000
	166.47	1500	1530	2550	42	1.3	16700	16700	15700	17100	20000	20000	15500	17000
	188.40	1500	1530	2550	37	0.91	17700	17700	15700	17100	20000	20000	15500	17000
	198.31	1500	1530	2550	35	0.82	18100	18100	15700	17100	20000	20000	15500	17000
	225.79	1500	1530	2550	31	0.67	19300	19300	15700	17100	20000	20000	15500	17000
	262.93	1500	1530	2550	27	0.54	20000	20000	15700	17100	20000	20000	15500	17000
	281.71	1500	1530	2550	25	0.47	20000	20000	15700	17100	20000	20000	15500	17000

F77..

42 032 00 07

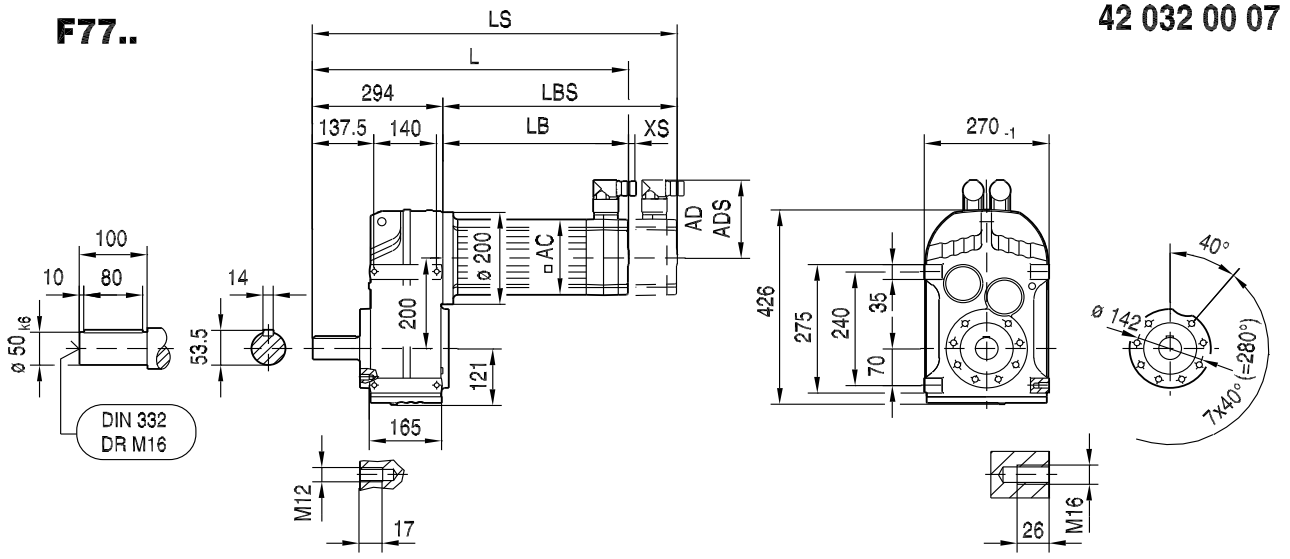

FA77B..

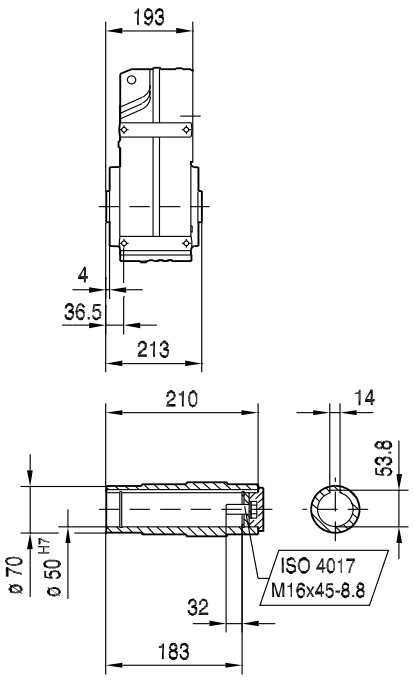

FH77B..

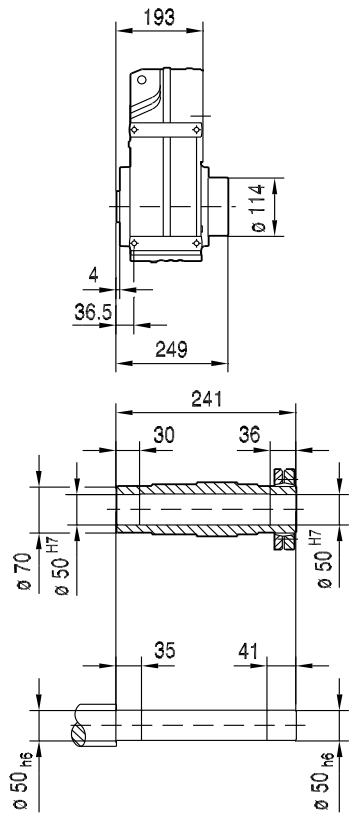

FV77B..

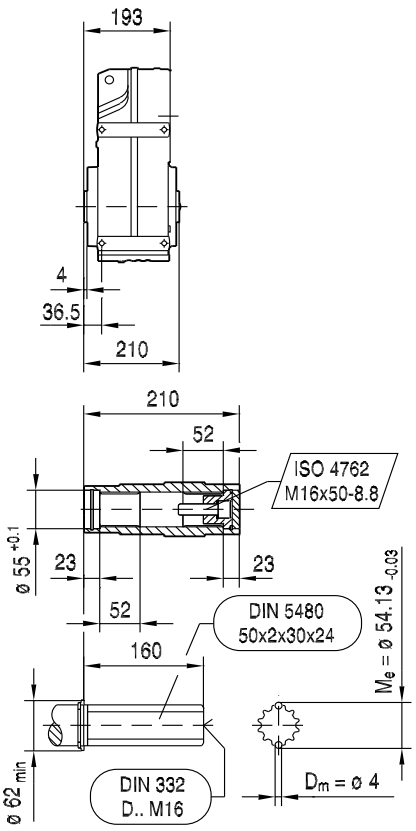

(→ 144)	CMP63M	CMP63L	CMP71S	CMP71M	CMP71L	CMP80S	CMP80M	CMP80L	CMP100S	CMP100M	CMP100L
AC	88	88	115	115	115	137	137	137	162	162	162
AD	92	92	102	102	102	134	134	134	146	146	146
ADS	92	92	104	104	104	137	137	137	147	147	147
L	511	561	452	477	527	492	526	594	524	564	644
LS	540	590	517	542	592	570	604	672	620	660	740
LB	217	267	158	183	233	198	232	300	230	270	350
LBS	246	296	223	248	298	276	310	378	326	366	446
XS	14	14	11	11	11	37	37	37	37	37	37

FF77..

42 033 00 07

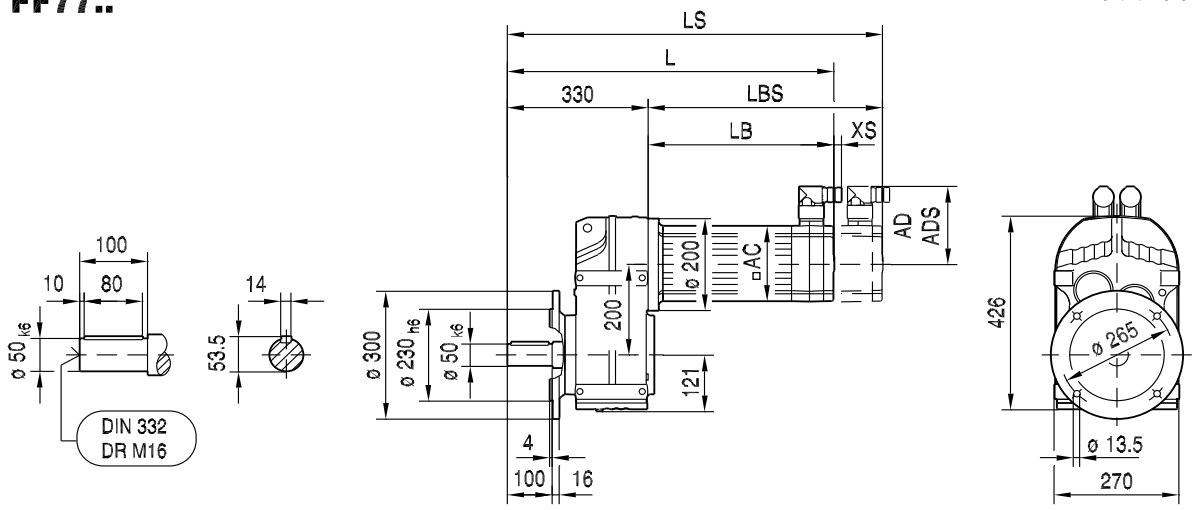

FAF77..

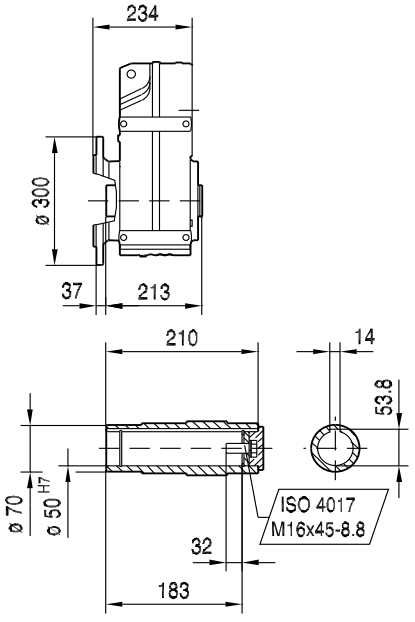

FHF77..

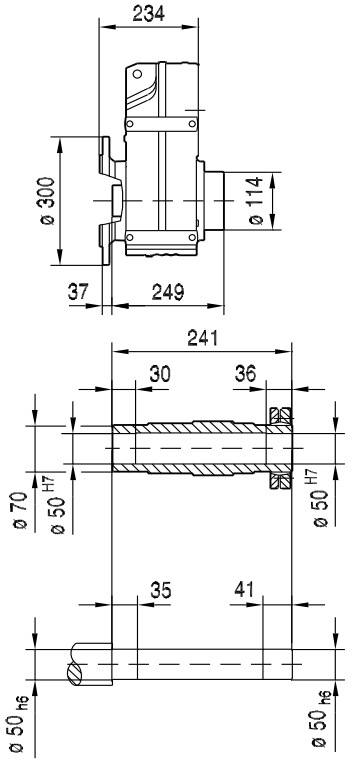

FVF77..

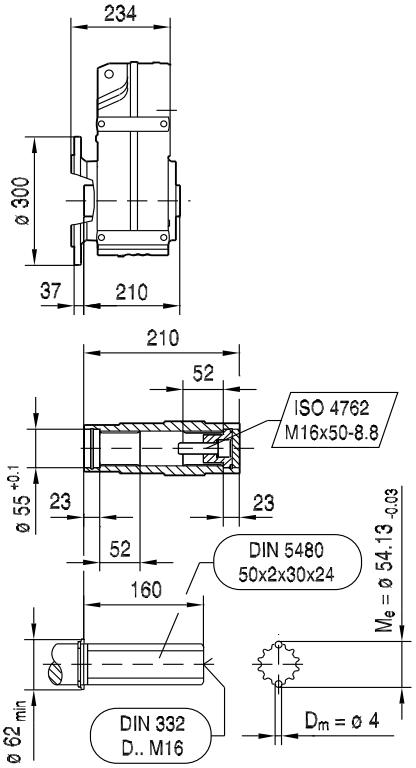

(→ 144)	CMP63M	CMP63L	CMP71S	CMP71M	CMP71L	CMP80S	CMP80M	CMP80L	CMP100S	CMP100M	CMP100L
AC	88	88	115	115	115	137	137	137	162	162	162
AD	92	92	102	102	102	134	134	134	146	146	146
ADS	92	92	104	104	104	137	137	137	147	147	147
L	547	597	488	513	563	528	562	630	560	600	680
LS	576	626	553	578	628	606	640	708	656	696	776
LB	217	267	158	183	233	198	232	300	230	270	350
LBS	246	296	223	248	298	276	310	378	326	366	446
XS	14	14	11	11	11	37	37	37	37	37	37

FA77..

42 034 00 07

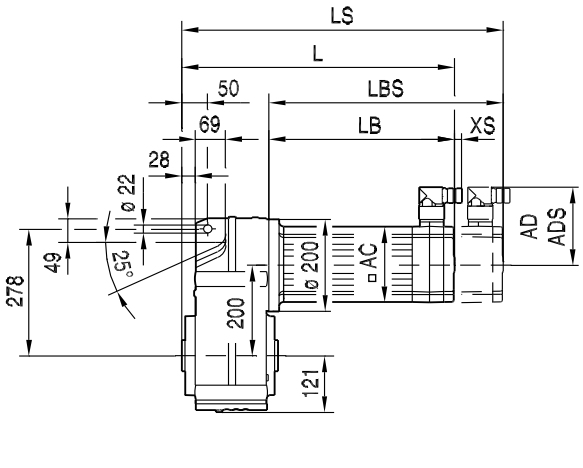

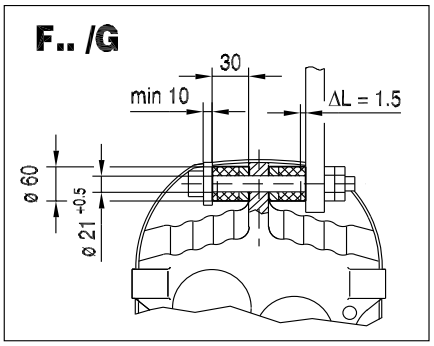

FA77..

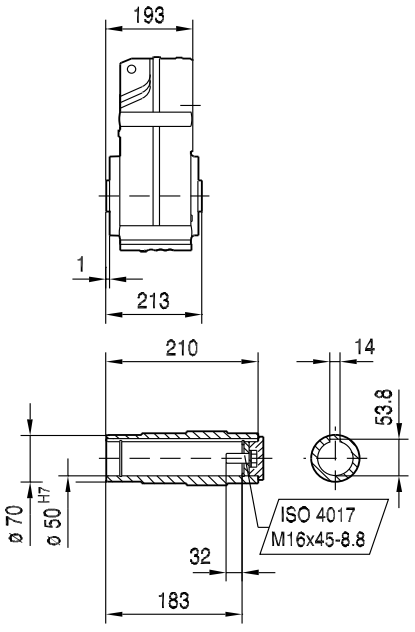

FH77..

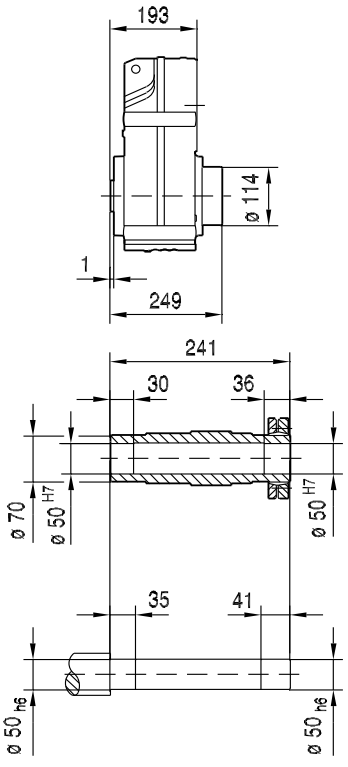

FV77..

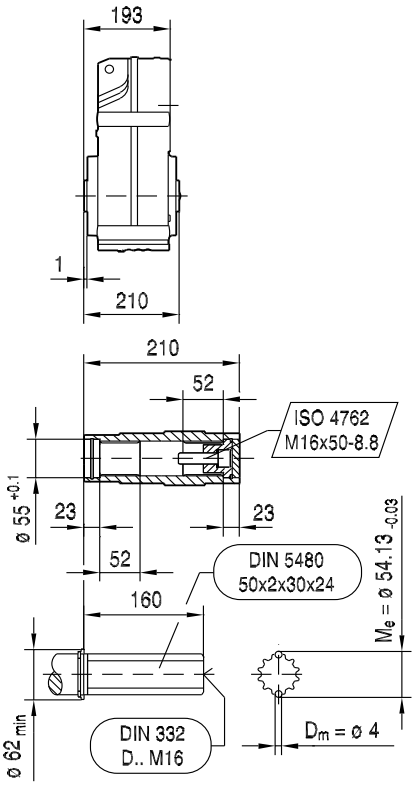

(→ 144)	CMP63M	CMP63L	CMP71S	CMP71M	CMP71L	CMP80S	CMP80M	CMP80L	CMP100S	CMP100M	CMP100L
AC	88	88	115	115	115	137	137	137	162	162	162
AD	92	92	102	102	102	134	134	134	146	146	146
ADS	92	92	104	104	104	137	137	137	147	147	147
L	410	460	351	376	426	391	425	493	423	463	543
LS	439	489	416	441	491	469	503	571	519	559	639
LB	217	267	158	183	233	198	232	300	230	270	350
LBS	246	296	223	248	298	276	310	378	326	366	446
XS	14	14	11	11	11	37	37	37	37	37	37

FAZ77..

42 035 00 07

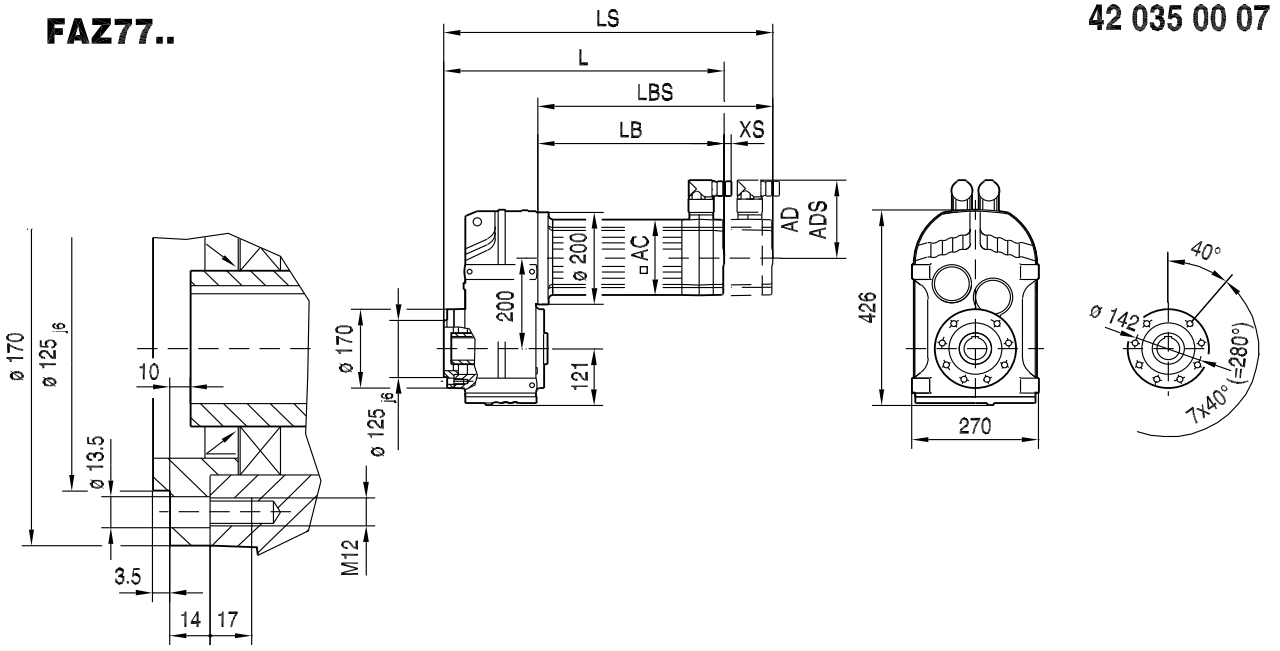

FAZ77..

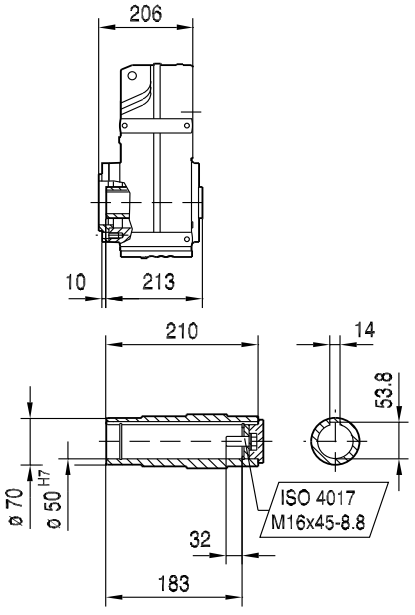

FHZ77..

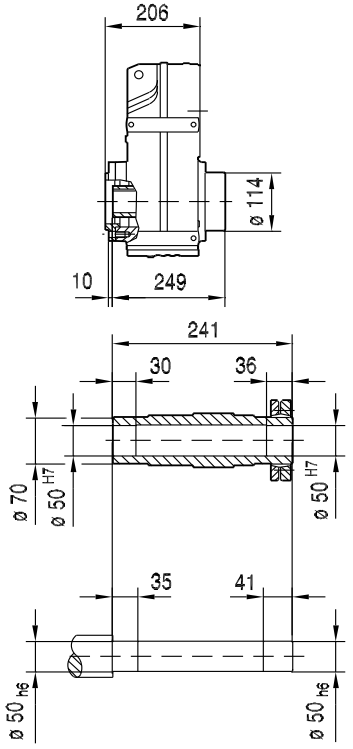

FVZ77..

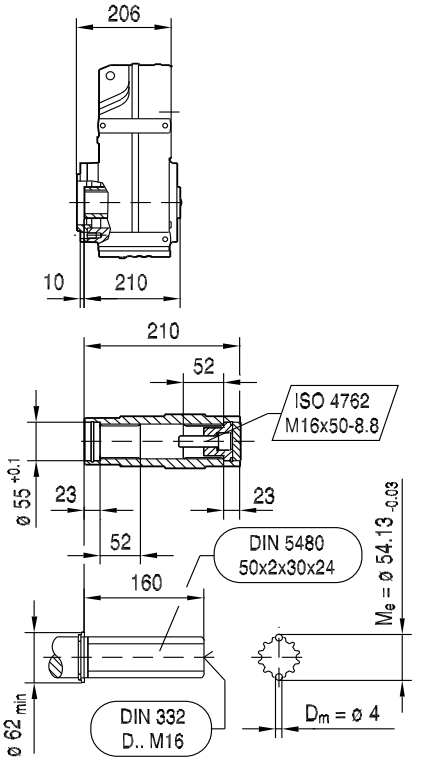

(→ 144)	CMP63M	CMP63L	CMP71S	CMP71M	CMP71L	CMP80S	CMP80M	CMP80L	CMP100S	CMP100M	CMP100L
AC	88	88	115	115	115	137	137	137	162	162	162
AD	92	92	102	102	102	134	134	134	146	146	146
ADS	92	92	104	104	104	137	137	137	147	147	147
L	423	473	364	389	439	404	438	506	436	476	556
LS	452	502	429	454	504	482	516	584	532	572	652
LB	217	267	158	183	233	198	232	300	230	270	350
LBS	246	296	223	248	298	276	310	378	326	366	446
XS	14	14	11	11	11	37	37	37	37	37	37

FT77..

42 036 00 07

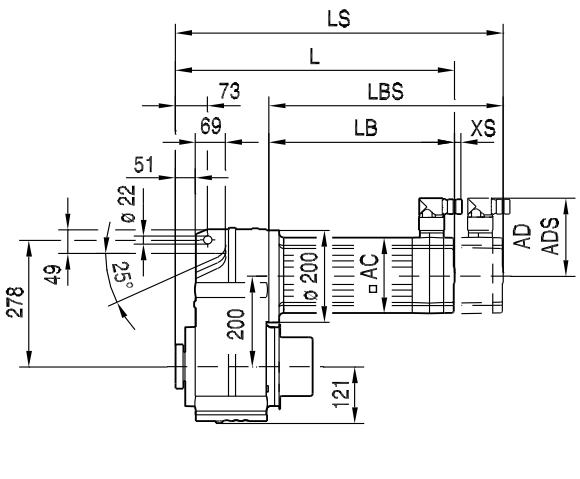

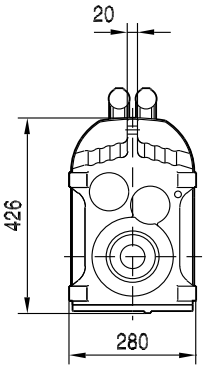

F.. /G

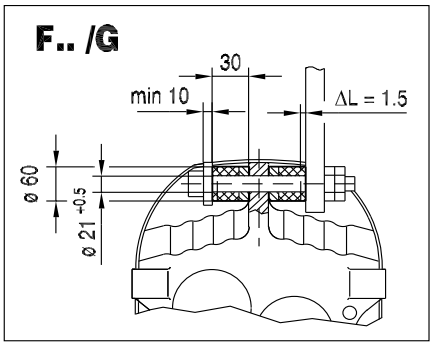

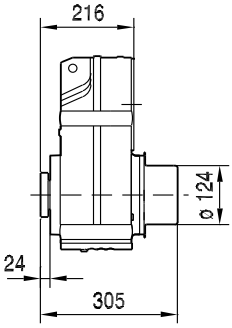

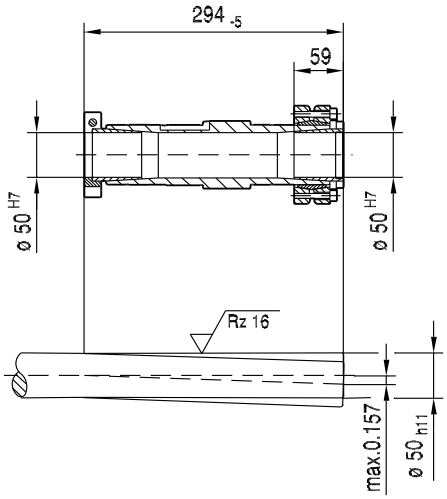

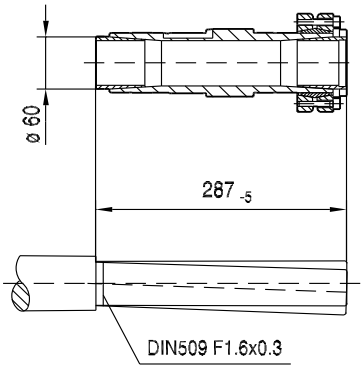

(→ 144)	CMP63M	CMP63L	CMP71S	CMP71M	CMP71L	CMP80S	CMP80M	CMP80L	CMP100S	CMP100M	CMP100L
AC	88	88	115	115	115	137	137	137	162	162	162
AD	92	92	102	102	102	134	134	134	146	146	146
ADS	92	92	104	104	104	137	137	137	147	147	147
L	433	483	374	399	449	414	448	516	446	486	566
LS	462	512	439	464	514	492	526	594	542	582	662
LB	217	267	158	183	233	198	232	300	230	270	350
LBS	246	296	223	248	298	276	310	378	326	366	446
XS	14	14	11	11	11	37	37	37	37	37	37



9.2.7 F 87

M_{aDyn} [Nm]		CMP								
	i	71S	71M	71L	80S	80M	80L	100S	100M	100L
FA87 2	4.12					250	425	270	430	710
	4.92					295	510	325	515	850
	5.63		168	255	225	340	580	370	585	970
	6.65		199	300	270	400	690	440	695	1150
	7.35	137	215	330	300	445	760	485	765	1270
	8.29	154	245	375	335	500	860	545	860	1430
	9.58					580	990	630	1000	1660
	11.46					695	1180	755	1200	1980
	13.12		390	595	535	795	1360	860	1370	2270
	15.48		460	700	630	930	1600	1020	1620	2680
	17.12	315	510	775	695	1030	1770	1130	1790	2960
	19.31	355	575	870	785	1170	2000	1270	2020	>3090
	21.32	395	635	960	870	1290	2210	1410	2230	>3090
	23.68	440	705	1070	960	1430	2450	1560	2480	>3090
	26.50	490	790	1200	1080	1600	2750	1750	2770	>3090
	28.78	535	850	1300	1170	1740		1900		
	33.92	630	1010	1540	1380	2050		2240		
FA87 3	29.20		860	1310	1180	1750	2990	1910	3020	>3090
	35.19		1040	1580	1420	2110	>3090	2300	>3090	>3090
	39.30	720	1160	1760	1580	2360	>3090	2570	>3090	>3090
	45.28	830	1330	2030	1830	2720	>3090	2960	>3090	>3090
	50.36	920	1480	2260	2030	3020	>3090	>3090	>3090	>3090
	56.75		1660	2520	2260	>3090	>3090	>3090	>3090	>3090
	68.40		2000	3040	2730	>3090	>3090	>3090	>3090	>3090
	76.39	1390	2230	>3090	3050	>3090	>3090	>3090	>3090	>3090
	88.01	1600	2570	>3090	>3090	>3090	>3090	>3090	>3090	>3090
	97.89	1780	2860	>3090	>3090	>3090	>3090	>3090	>3090	>3090
	109.49	1990	>3090	>3090	>3090	>3090	>3090	>3090	>3090	>3090
	123.29	2240	>3090	>3090	>3090	>3090	>3090	>3090	>3090	>3090
	134.16	2440	>3090	>3090	>3090	>3090		>3090		
	159.61	2910	>3090	>3090	>3090	>3090		>3090		
	179.97	>3090	>3090	>3090	>3090					
	197.20	>3090	>3090	>3090	>3090					
	228.93	>3090	>3090							
	255.37	>3090								
	270.68	>3090								

→ 📖 144

m [kg]		CMP								
	s	71S	71M	71L	80S	80M	80L	100S	100M	100L
FA87	2	96	98	100	105	105	110	105	110	120
FA87	3	99	100	105	105	110	110	110	115	125
FAF: + 12.7 kg / F: + 5.7 kg / FF: + 21.3 kg										



CMP..	i	n_{epk} [1/min]	η [%]	c_{TG} FA [Nm/']	FAF [Nm/']	F [Nm/']	FF [Nm/']	φ /R [']
FA87 2	4.12	3924	97	465	465	197	186	7
	4.92	4378	97	465	465	197	186	7
	5.63	4500	97	465	465	197	186	7
	6.65	4500	97	465	465	197	186	7
	7.35	4500	97	465	465	197	186	7
	8.29	4500	97	465	465	197	186	7
	9.58	4500	97	711	711	230	216	7
	11.46	4500	97	711	711	230	216	7
	13.12	4500	97	711	711	230	216	7
	15.48	4500	97	711	711	230	216	7
	17.12	4500	97	711	711	230	216	7
	19.31	4500	97	711	711	230	216	7
	21.32	4500	97	711	711	230	216	7
	23.68	4500	97	711	711	230	216	7
	26.50	4500	97	711	711	230	216	7
	28.78	4500	97	711	711	230	216	7
	33.92	4500	97	711	711	230	216	7
FA87 3	29.20	4500	96	833	833	242	226	8
	35.19	4500	96	833	833	242	226	8
	39.30	4500	96	833	833	242	226	8
	45.28	4500	96	833	833	242	226	8
	50.36	4500	96	833	833	242	226	7
	56.75	4500	95	846	846	243	227	7
	68.40	4500	95	846	846	243	227	7
	76.39	4500	95	846	846	243	227	7
	88.01	4500	95	846	846	243	227	7
	97.89	4500	95	846	846	243	227	7
	109.49	4500	95	846	846	243	227	7
	123.29	4500	95	846	846	243	227	7
	134.16	4500	95	846	846	243	227	7
	159.61	4500	95	846	846	243	227	7
	179.97	4500	94	846	846	243	227	7
	197.20	4500	94	846	846	243	227	7
	228.93	4500	94	846	846	243	227	7
	255.37	4500	94	846	846	243	227	7
	270.68	4500	93	846	846	243	227	7

CMP..							F_{Ramax}				F_{Rapk}			
n_e = 1400	i	M_{amax} [Nm]	M_{apk} [Nm]	$M_{aNotaus}$ [Nm]	n_{ak} [1/min]	J_G 10^{-4} [kgm^2]	FA [N]	FAF [N]	F [N]	FF [N]	FA [N]	FAF [N]	F [N]	FF [N]
FA87 2	4.12	1460	1940	2482	340	114	3020	3020	5980	11800	30000	30000	26400	23400
	4.92	1530	1960	2601	346	85	3310	3310	6430	12600	30000	30000	26300	23400
	5.63	1530	1960	2601	391	67	3850	3850	7020	13400	30000	30000	26300	23400
	6.65	1530	1970	2601	466	52	4550	4550	7790	14400	30000	30000	26300	23400
	7.35	1530	1970	2601	490	44	5000	5000	8280	15000	30000	30000	26300	23400
	8.29	1530	1980	2601	531	36	5550	5550	8890	15800	30000	30000	26200	23300
	9.58	2880	3090	4896	146	63	275	275	5050	11000	30000	30000	16000	16000
	11.46	3000	3090	5100	122	49	575	575	5580	11800	30000	30000	16000	16000
	13.12	3000	3090	5100	114	40	1300	1300	6370	13100	30000	30000	16000	16000
	15.48	3000	3090	5100	110	32	2220	2220	7390	14700	30000	30000	16000	16000
	17.12	3000	3090	5100	105	28	2810	2810	8040	15800	30000	30000	16000	16000
	19.31	3000	3090	5100	104	23	3540	3540	8840	17000	30000	30000	16000	16000
	21.32	3000	3090	5100	98	20	4160	4160	9520	18000	30000	30000	16000	16000
	23.68	3000	3090	5100	97	17	4850	4850	10300	19100	30000	30000	16000	16000
	26.50	3000	3090	5100	98	15	5610	5610	11100	19800	30000	30000	16000	16000
	28.78	2450	3090	4165	191	13	8940	8940	13900	22500	30000	30000	16000	16000
	33.92	2610	3090	4437	150	10	9340	9340	14600	22200	30000	30000	16000	16000



F..CMP
F..[mm]

CMP..							F_{Ramax}				F_{Rapk}			
n_e = 1400	i	M_{amax} [Nm]	M_{apk} [Nm]	$M_{aNotaus}$ [Nm]	n_{ak} [1/min]	J_G 10^{-4} [kgm^2]	FA [N]	FAF [N]	F [N]	FF [N]	FA [N]	FAF [N]	F [N]	FF [N]
	29.20	2510	3090	4267	48	25	8740	8740	13800	22400	30000	30000	16000	16000
	35.19	2610	3090	4437	40	19	9610	9610	14900	22200	30000	30000	16000	16000
	39.30	2720	3090	4624	36	16	9910	9910	15400	22000	30000	30000	16000	16000
	45.28	2820	3090	4794	31	13	10500	10500	16200	21700	30000	30000	16000	16000
	50.36	2940	3090	4998	28	11	10800	10800	16800	21500	30000	30000	16000	16000
	56.75	3000	3090	5100	32	20	11600	11600	17700	19800	30000	30000	16000	16000
	68.40	3000	3090	5100	32	16	13300	13300	19600	19800	30000	30000	16000	16000
	76.39	3000	3090	5100	31	14	14300	14300	19800	19800	30000	30000	16000	16000
FA87	88.01	3000	3090	5100	32	11	15800	15800	19800	19800	30000	30000	16000	16000
3	97.89	3000	3090	5100	32	9.9	16900	16900	19800	19800	30000	30000	16000	16000
	109.49	3000	3090	5100	32	8.3	18100	18100	19800	19800	30000	30000	16000	16000
	123.29	3000	3090	5100	32	7.0	19400	19400	19800	19800	30000	30000	16000	16000
	134.16	3000	3090	5100	32	6.3	20400	20400	19800	19800	30000	30000	16000	16000
	159.61	3000	3090	5100	32	4.9	22500	22500	19800	19800	30000	30000	16000	16000
	179.97	3000	3090	5100	32	4.0	24100	24100	19800	19800	30000	30000	16000	16000
	197.20	3000	3090	5100	32	3.5	25300	25300	19800	19800	30000	30000	16000	16000
	228.93	3000	3090	5100	31	2.8	27300	27300	19800	19800	30000	30000	16000	16000
	255.37	3000	3090	5100	27	1.8	28900	28900	19800	19800	30000	30000	16000	16000
	270.68	3000	3090	5100	26	1.6	29800	29800	19800	19800	30000	30000	16000	16000

F87..

42 037 00 07

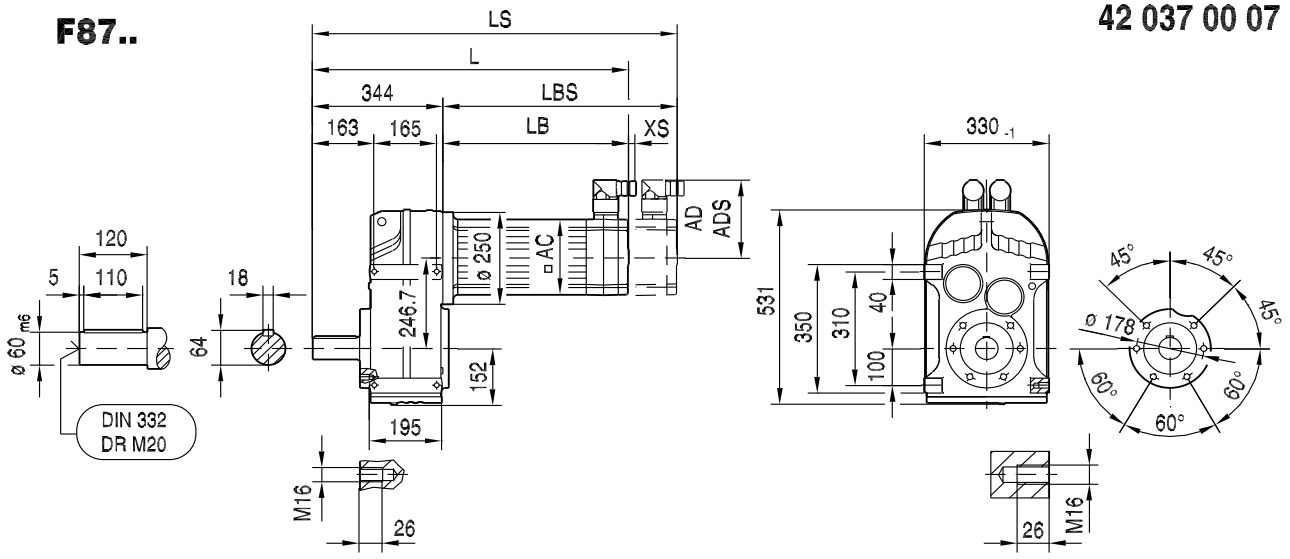

FA87B..

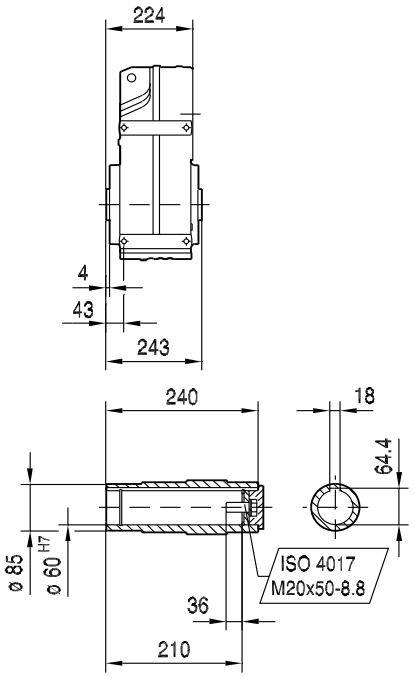

FH87B..

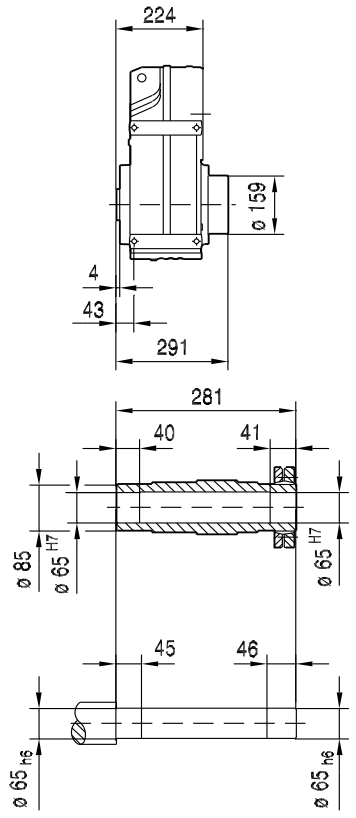

FV87B..

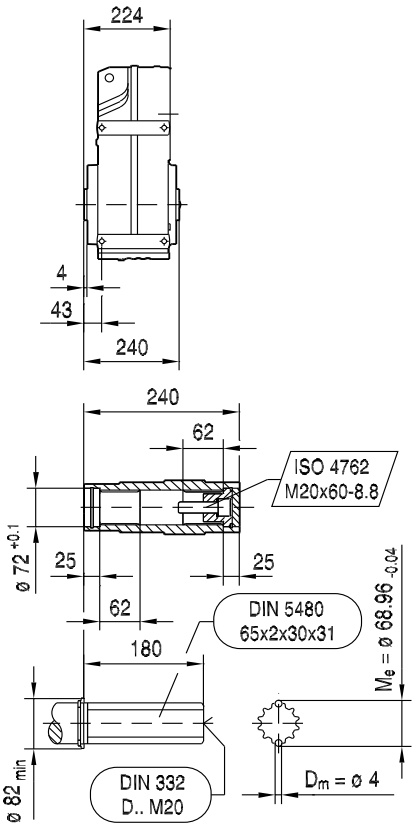

(→ 144)	CMP71S	CMP71M	CMP71L	CMP80S	CMP80M	CMP80L	CMP100S	CMP100M	CMP100L
AC	115	115	115	137	137	137	162	162	162
AD	102	102	102	134	134	134	146	146	146
ADS	104	104	104	137	137	137	147	147	147
L	498	523	573	537	571	639	569	609	689
LS	563	588	638	615	649	717	665	705	785
LB	154	179	229	193	227	295	225	265	345
LBS	219	244	294	271	305	373	321	361	441
XS	11	11	11	37	37	37	37	37	37

42 038 00 07

FF87..

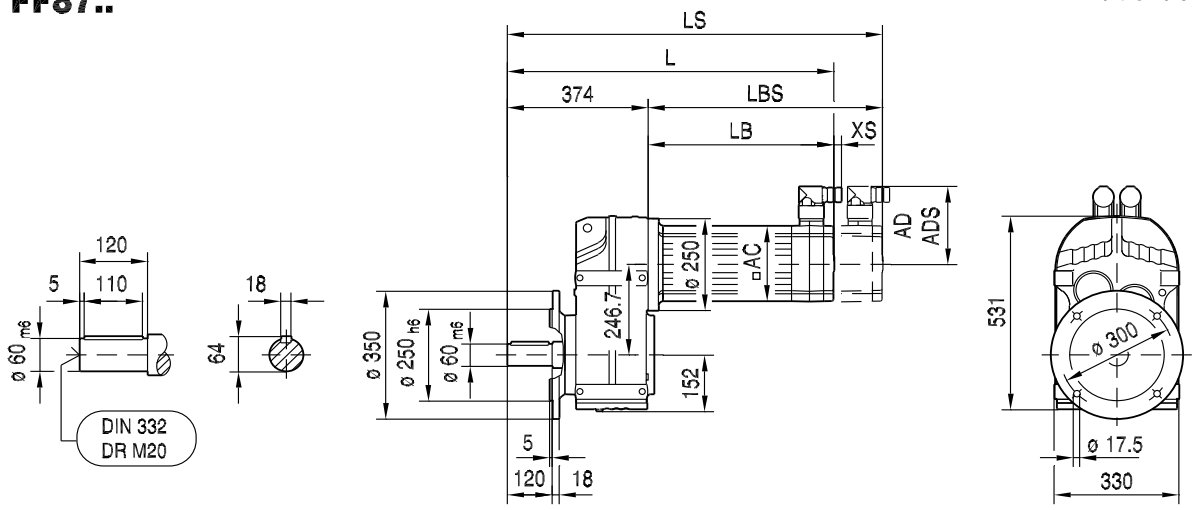

FAF87..

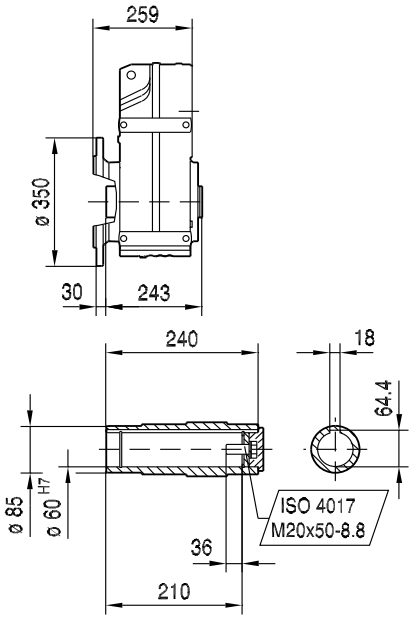

FHF87..

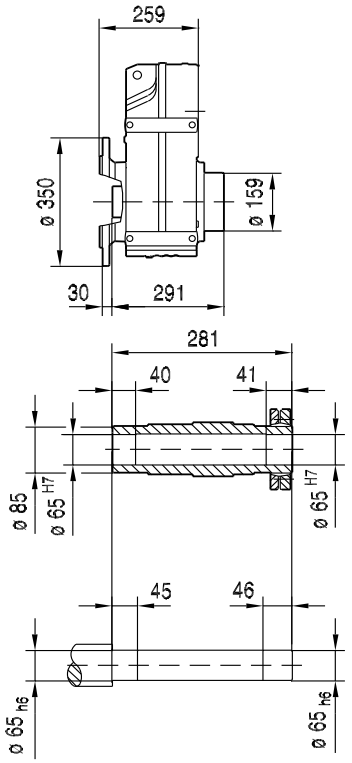

FVF87..

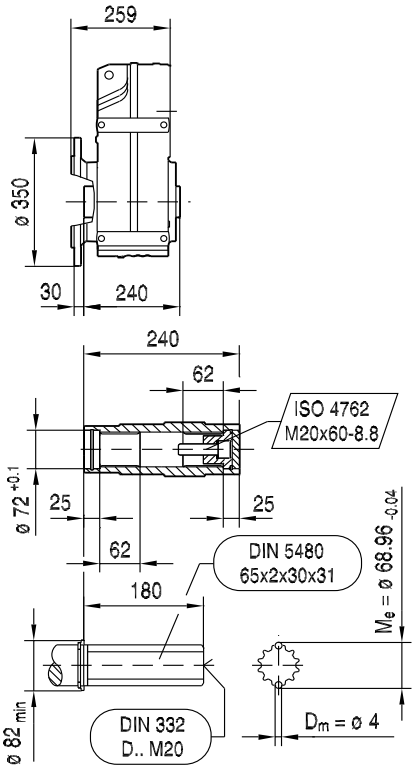

(→ 📖 144)	CMP71S	CMP71M	CMP71L	CMP80S	CMP80M	CMP80L	CMP100S	CMP100M	CMP100L
AC	115	115	115	137	137	137	162	162	162
AD	102	102	102	134	134	134	146	146	146
ADS	104	104	104	137	137	137	147	147	147
L	528	553	603	567	601	669	599	639	719
LS	593	618	668	645	679	747	695	735	815
LB	154	179	229	193	227	295	225	265	345
LBS	219	244	294	271	305	373	321	361	441
XS	11	11	11	37	37	37	37	37	37

FA87..

42 039 00 07

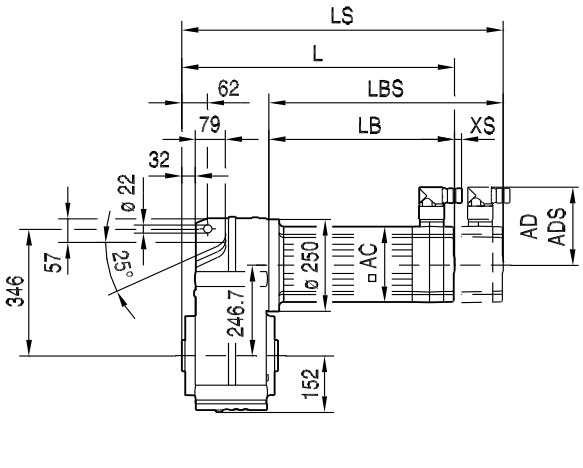

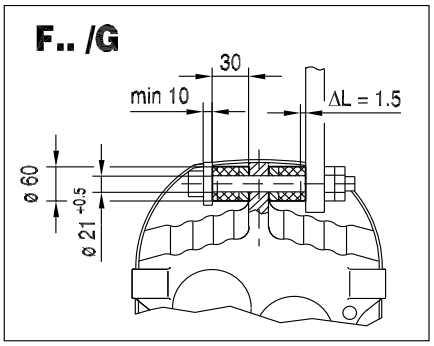

FA87..

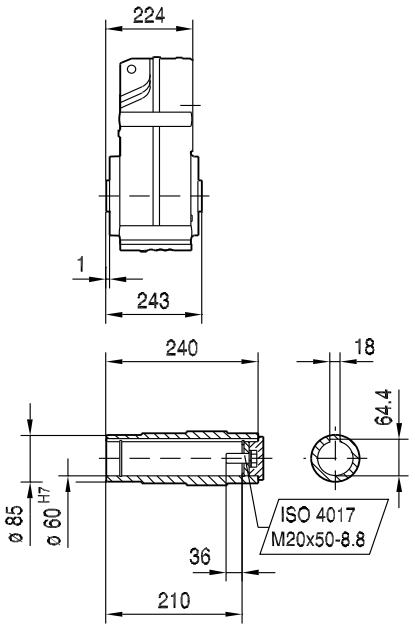

FH87..

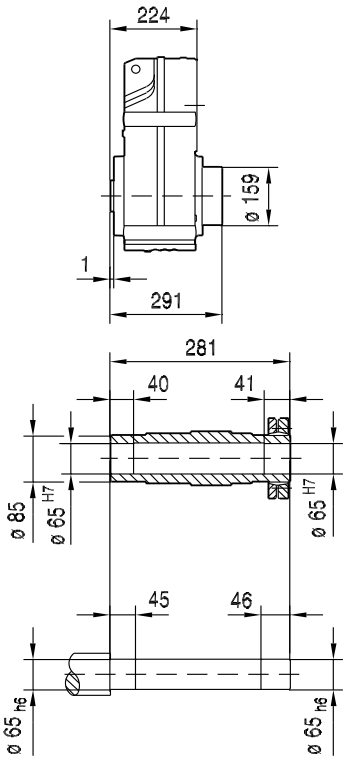

FV87..

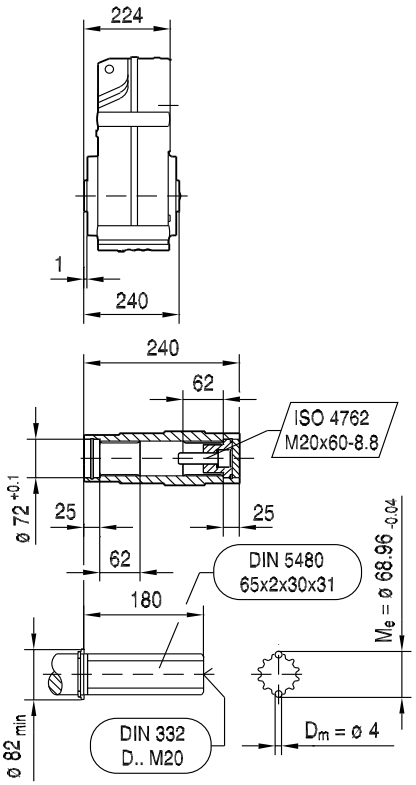

(→ 144)	CMP71S	CMP71M	CMP71L	CMP80S	CMP80M	CMP80L	CMP100S	CMP100M	CMP100L
AC	115	115	115	137	137	137	162	162	162
AD	102	102	102	134	134	134	146	146	146
ADS	104	104	104	137	137	137	147	147	147
L	378	403	453	417	451	519	449	489	569
LS	443	468	518	495	529	597	545	585	665
LB	154	179	229	193	227	295	225	265	345
LBS	219	244	294	271	305	373	321	361	441
XS	11	11	11	37	37	37	37	37	37

FAZ87..

42 040 00 07

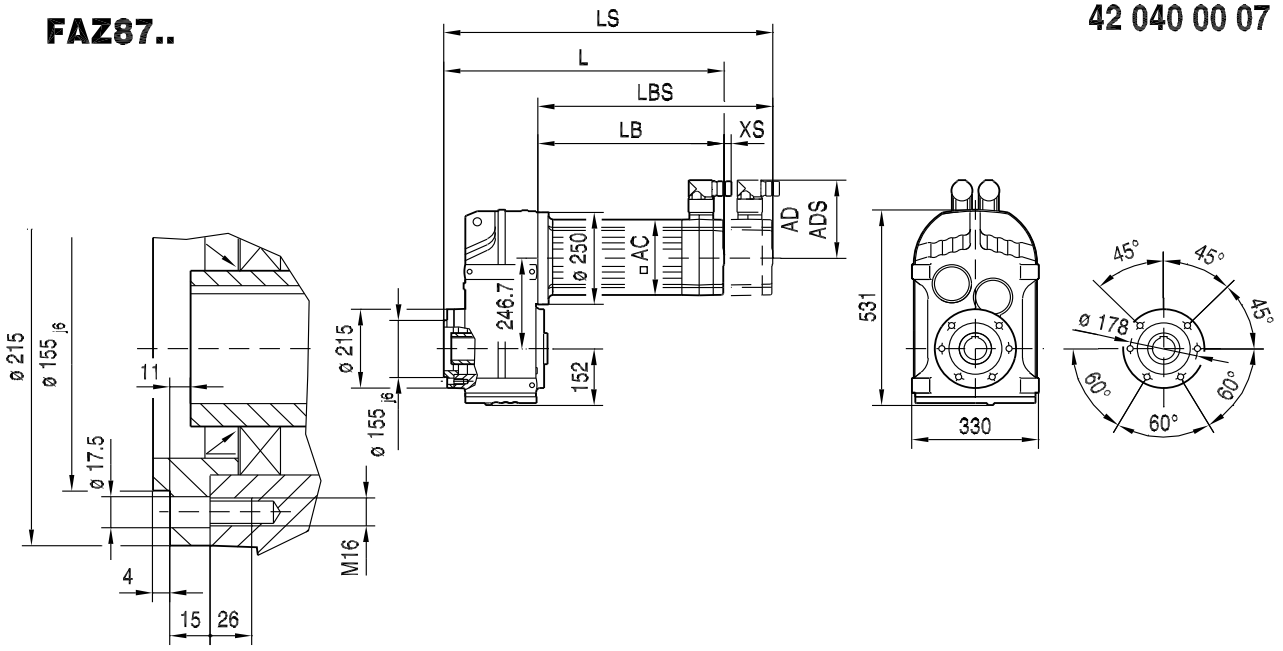

FAZ87..

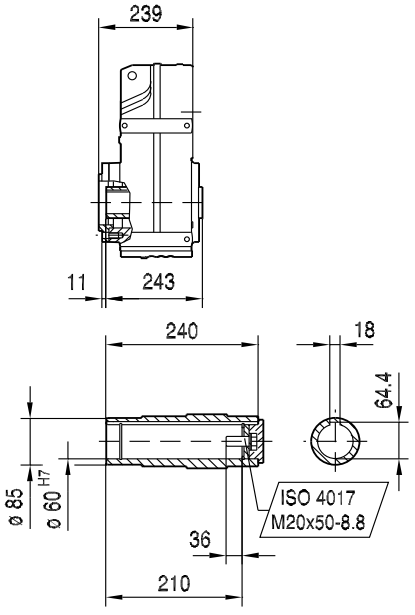

FHZ87..

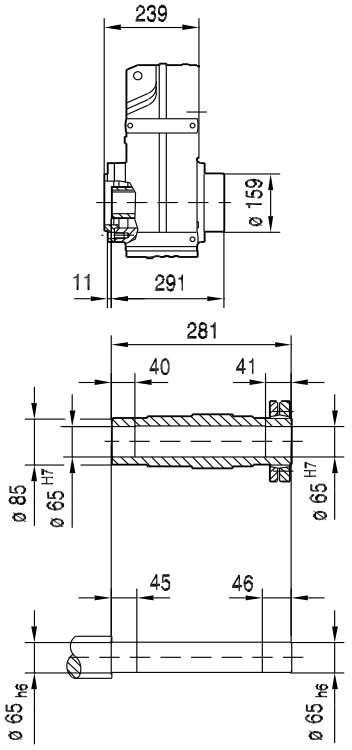

FVZ87..

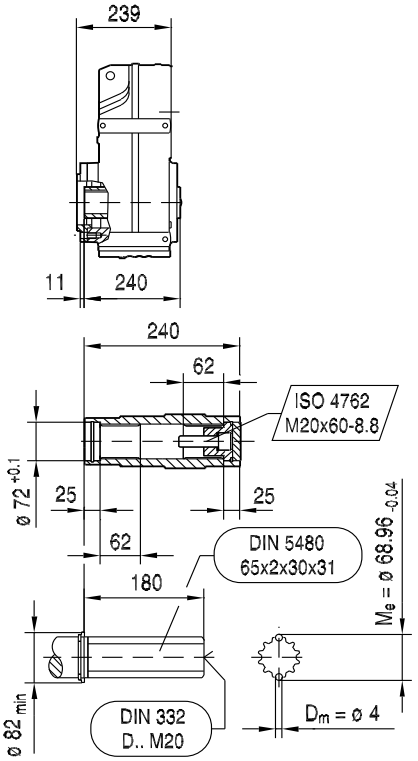

(→ 📖 144)	CMP71S	CMP71M	CMP71L	CMP80S	CMP80M	CMP80L	CMP100S	CMP100M	CMP100L
AC	115	115	115	137	137	137	162	162	162
AD	102	102	102	134	134	134	146	146	146
ADS	104	104	104	137	137	137	147	147	147
L	393	418	468	432	466	534	464	504	584
LS	458	483	533	510	544	612	560	600	680
LB	154	179	229	193	227	295	225	265	345
LBS	219	244	294	271	305	373	321	361	441
XS	11	11	11	37	37	37	37	37	37

FT87..

42 041 00 07

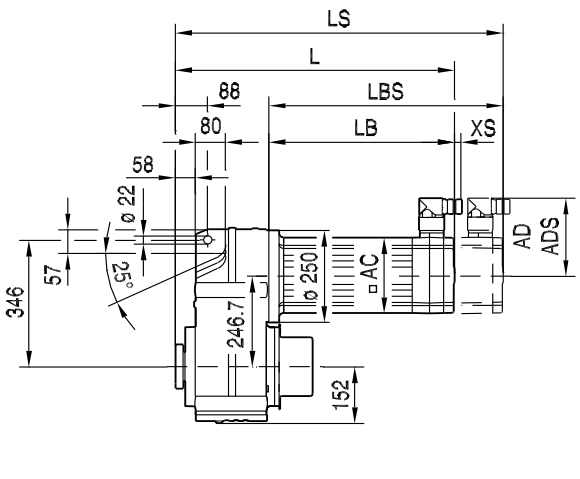

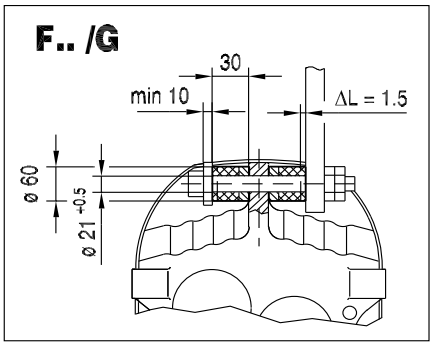

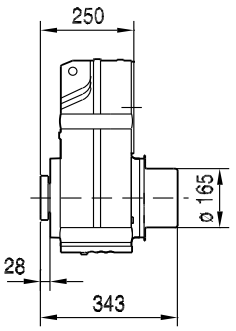

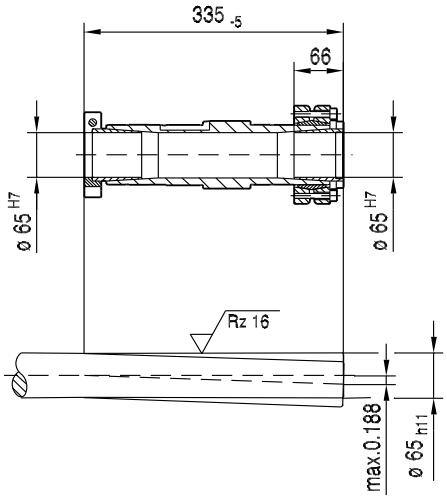

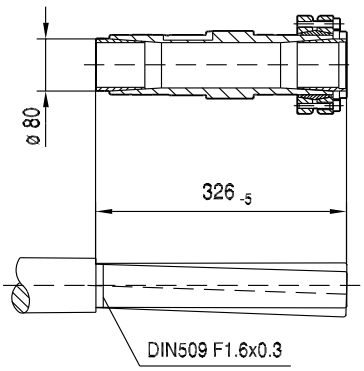

(→ 📖 144)	CMP71S	CMP71M	CMP71L	CMP80S	CMP80M	CMP80L	CMP100S	CMP100M	CMP100L
AC	115	115	115	137	137	137	162	162	162
AD	102	102	102	134	134	134	146	146	146
ADS	104	104	104	137	137	137	147	147	147
L	404	429	479	443	477	545	475	515	595
LS	469	494	544	521	555	623	571	611	691
LB	154	179	229	193	227	295	225	265	345
LBS	219	244	294	271	305	373	321	361	441
XS	11	11	11	37	37	37	37	37	37



9.2.8 F 97

M_{aDyn} [Nm]		CMP					
	i	80S	80M	80L	100S	100M	100L
FA97 2	3.87			400		405	670
	4.57		275	470	300	475	790
	5.23		315	540	345	545	900
	6.17		370	640	405	645	1070
	7.07	285	425	730	465	740	1220
	8.22	335	495	850	540	860	1420
	9.06	365	550	940	600	940	1570
	11.16		675	1150	735	1160	1930
	12.77		775	1320	840	1330	2210
	15.06		910	1560	990	1570	2610
	17.25	700	1040	1790	1140	1800	2990
	20.07	810	1210	2080	1320	2100	3480
	22.11	900	1340	2290	1460	2310	3830
	24.92	1010	1510	2580	1650	2610	4320
	27.44	1120	1660	2840	1810	2870	>4360
	30.39	1240	1840	3150	2010	3180	>4360
	33.91	1380	2050	3510	2240	3550	>4360
	36.64	1490	2220		2420		
	43.28	1760	2620		2860		
FA97 3	32.50		1950	3330	2130	3360	>4360
	38.86		2330	3990	2540	4020	>4360
	44.49	1790	2670	>4360	2910	>4360	>4360
	52.49	2120	3150	>4360	3440	>4360	>4360
	58.06	2340	3480	>4360	3800	>4360	>4360
	65.47	2640	3930	>4360	4290	>4360	>4360
	72.29	2920	4340	>4360	>4360	>4360	>4360
	75.63		>4360	>4360	>4360	>4360	>4360
	80.31	3210	>4360	>4360	>4360	>4360	>4360
	86.59	3460	>4360	>4360	>4360	>4360	>4360
	89.85	3590	>4360	>4360	>4360	>4360	>4360
	97.58	3900	>4360		>4360		
	102.16	4080	>4360	>4360	>4360	>4360	>4360
	112.99	>4360	>4360	>4360	>4360	>4360	>4360
	127.42	>4360	>4360	>4360	>4360	>4360	>4360
	140.71	>4360	>4360	>4360	>4360	>4360	>4360
	156.30	>4360	>4360	>4360	>4360	>4360	>4360
	174.87	>4360	>4360	>4360	>4360	>4360	>4360
	189.92	>4360	>4360		>4360		
	223.88	>4360	>4360		>4360		
	253.41	>4360					
	276.77	>4360					

→ 📖 144

m [kg]		CMP					
	s	80S	80M	80L	100S	100M	100L
FA97	2	165	165	170	170	175	185
FA97	3	170	170	175	180	180	190
FAF: + 21.7 kg / F: + 7.5 kg / FF: + 40.3 kg							



CMP..	i	n_{epk} [1/min]	η [%]	c_{TG} FA [Nm/']	FAF [Nm/']	F [Nm/']	FF [Nm/']	φ /R [']
FA97 2	3.87	3197	97	627	627	324	283	9
	4.57	3597	97	627	627	324	283	9
	5.23	3924	97	627	627	324	283	9
	6.17	4378	97	627	627	324	283	9
	7.07	4500	97	627	627	324	283	9
	8.22	4500	97	627	627	324	283	9
	9.06	4500	97	627	627	324	283	9
	11.16	4500	97	873	873	380	325	6
	12.77	4500	97	873	873	380	325	6
	15.06	4500	97	873	873	380	325	6
	17.25	4500	97	873	873	380	325	6
	20.07	4500	97	873	873	380	325	6
	22.11	4500	97	873	873	380	325	6
	24.92	4500	97	873	873	380	325	6
	27.44	4500	97	873	873	380	325	6
	30.39	4500	97	873	873	380	325	6
	33.91	4500	97	873	873	380	325	6
	36.64	4500	97	873	873	380	325	6
	43.28	4500	97	873	873	380	325	6
FA97 3	32.50	4500	96	956	956	395	336	6
	38.86	4378	96	956	956	395	336	6
	44.49	4500	96	956	956	395	336	6
	52.49	4500	96	956	956	395	336	6
	58.06	4500	96	956	956	395	336	6
	65.47	4500	96	956	956	395	336	6
	72.29	4500	96	956	956	395	336	6
	75.63	4378	95	965	965	396	337	6
	80.31	4500	95	956	956	395	336	6
	86.59	4500	95	965	965	396	337	6
	89.85	4500	95	956	956	395	336	6
	97.58	4500	95	956	956	395	336	6
	102.16	4500	95	965	965	396	337	6
	112.99	4500	95	965	965	396	337	6
	127.42	4500	95	965	965	396	337	6
	140.71	4500	95	965	965	396	337	6
	156.30	4500	95	965	965	396	337	6
	174.87	4500	94	965	965	396	337	6
	189.92	4500	94	965	965	396	337	6
	223.88	4500	94	965	965	396	337	6
	253.41	4500	93	965	965	396	337	6
	276.77	4500	93	965	965	396	337	6



F..CMP
F..[mm]

CMP..							F_{Ramax}				F_{Rapk}			
n_e = 1400	i	M_{amax} [Nm]	M_{apk} [Nm]	$M_{aNotaus}$ [Nm]	n_{ak} [1/min]	J_G 10^{-4} [kgm^2]	FA [N]	FAF [N]	F [N]	FF [N]	FA [N]	FAF [N]	F [N]	FF [N]
	3.87	1800	2700	3060	465	266	10300	10300	9960	16500	40000	40000	33600	30600
	4.57	2050	3000	3485	328	193	10200	10200	9950	16800	40000	40000	32900	30300
	5.23	2150	3020	3655	325	153	10700	10700	10400	17400	40000	40000	32800	30300
	6.17	2250	3030	3825	324	116	11400	11400	11100	18300	40000	40000	32800	30200
	7.07	2360	3040	4012	297	92	11900	11900	11500	19000	40000	40000	32800	30200
	8.22	2360	3050	4012	328	72	13100	13100	12600	20300	40000	40000	32800	30200
	9.06	2360	3050	4012	353	61	13900	13900	13400	21100	40000	40000	32800	30200
	11.16	4100	4360	6970	143	104	9710	9710	10000	18700	40000	40000	29700	28200
FA97	12.77	4300	4360	7310	141	85	10100	10100	10500	19400	40000	40000	29700	28200
2	15.06	4300	4360	7310	153	67	11700	11700	11900	21100	40000	40000	29700	28200
	17.25	4300	4360	7310	157	55	13100	13100	13200	22500	40000	40000	29700	28200
	20.07	4300	4360	7310	149	45	14700	14700	14600	24100	40000	40000	29700	28200
	22.11	4300	4360	7310	149	39	15700	15700	15600	25200	40000	40000	29700	28200
	24.92	4300	4360	7310	144	33	17100	17100	16800	26600	40000	40000	29700	28200
	27.44	4300	4360	7310	142	28	18200	18200	17900	27800	40000	40000	29700	28200
	30.39	4300	4360	7310	141	22	19500	19500	19000	28300	40000	40000	29700	28200
	33.91	4300	4360	7310	139	19	20900	20900	20300	28300	40000	40000	29700	28200
	36.64	3070	4360	5219	191	17	27000	27000	25500	30200	40000	40000	29700	28200
	43.28	3070	4360	5219	162	13	29300	29300	27600	30200	40000	40000	29700	28200
	32.50	4300	4360	7310	52	60	20300	20300	19800	28300	40000	40000	29700	28200
	38.86	4300	4360	7310	51	48	22700	22700	21900	28300	40000	40000	29700	28200
	44.49	4300	4360	7310	52	39	24500	24500	23600	28300	40000	40000	29700	28200
	52.49	4300	4360	7310	51	31	26900	26900	25800	28300	40000	40000	29700	28200
	58.06	4300	4360	7310	52	27	28500	28500	27200	28300	40000	40000	29700	28200
	65.47	4300	4360	7310	52	23	30400	30400	29000	28300	40000	40000	29700	28200
	72.29	4300	4360	7310	53	20	32000	32000	29900	28300	40000	40000	29700	28200
	75.63	4300	4360	7310	56	42	32800	32800	29900	28300	40000	40000	29700	28200
	80.31	4300	4360	7310	52	17	33800	33800	29900	28300	40000	40000	29700	28200
	86.59	4300	4360	7310	57	34	35100	35100	29900	28300	40000	40000	29700	28200
FA97	89.85	4300	4360	7310	52	14	35700	35700	29900	28300	40000	40000	29700	28200
3	97.58	4300	4360	7310	52	13	37200	37200	29900	28300	40000	40000	29700	28200
	102.16	4300	4360	7310	58	28	38100	38100	29900	28300	40000	40000	29700	28200
	112.99	4300	4360	7310	58	25	40000	40000	29900	28300	40000	40000	29700	28200
	127.42	4300	4360	7310	55	20	40000	40000	29900	28300	40000	40000	29700	28200
	140.71	4300	4360	7310	50	18	40000	40000	29900	28300	40000	40000	29700	28200
	156.30	4300	4360	7310	45	15	40000	40000	29900	28300	40000	40000	29700	28200
	174.87	4300	4360	7310	40	13	40000	40000	29900	28300	40000	40000	29700	28200
	189.92	4300	4360	7310	37	12	40000	40000	29900	28300	40000	40000	29700	28200
	223.88	4300	4360	7310	31	9.2	40000	40000	29900	28300	40000	40000	29700	28200
	253.41	4300	4360	7310	28	5.9	40000	40000	29900	28300	40000	40000	29700	28200
	276.77	4300	4360	7310	25	5.1	40000	40000	29900	28300	40000	40000	29700	28200

F97..

42 042 00 07

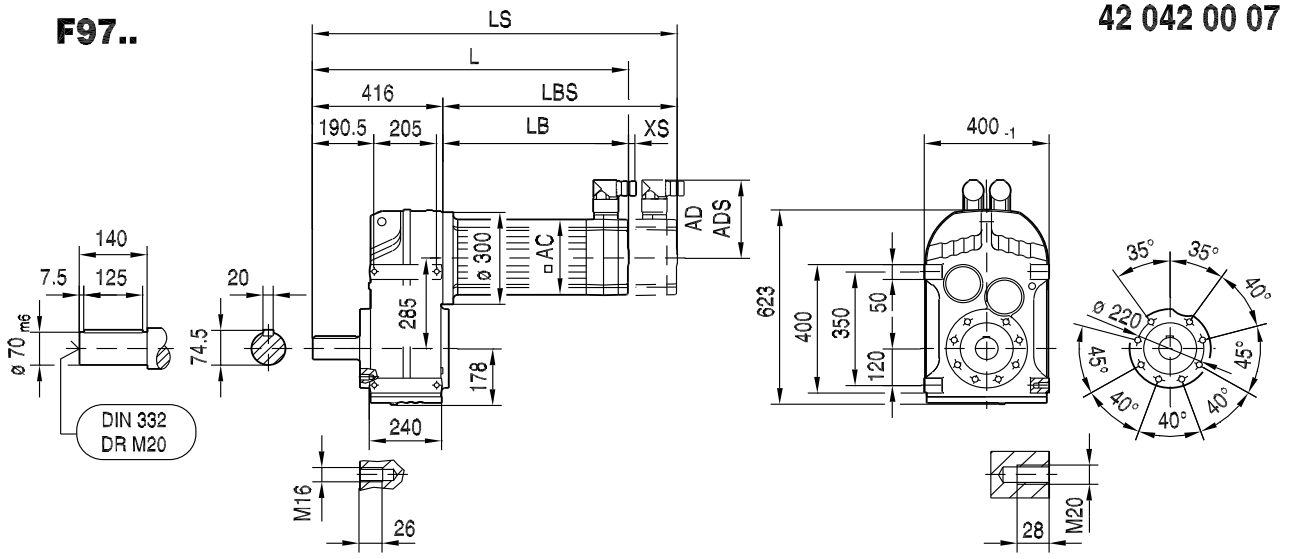

FA97B..

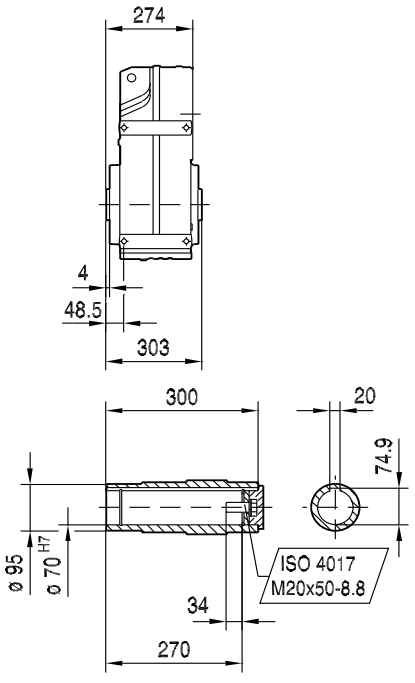

FH97B..

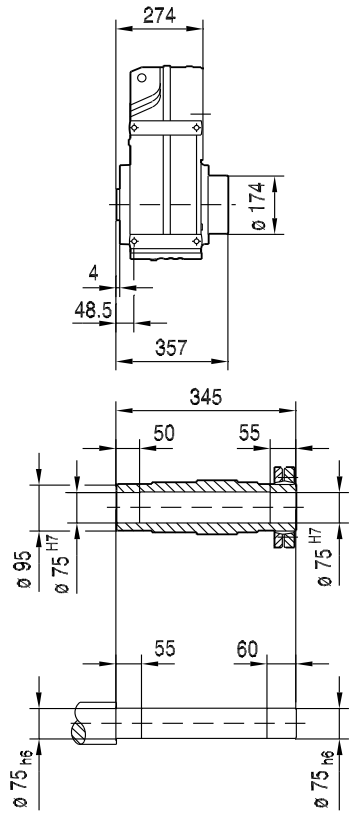

FV97B..

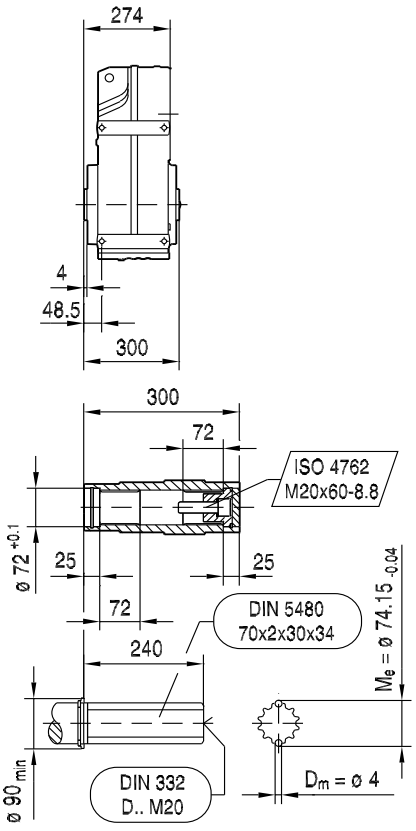

(→ 📖 144)	CMP80S	CMP80M	CMP80L	CMP100S	CMP100M	CMP100L		
AC	137	137	137	162	162	162		
AD	134	134	134	146	146	146		
ADS	137	137	137	147	147	147		
L	603	637	705	636	676	756		
LS	681	715	783	732	772	852		
LB	187	221	289	220	260	340		
LBS	265	299	367	316	356	436		
XS	37	37	37	37	37	37		

FF97..

42 043 00 07

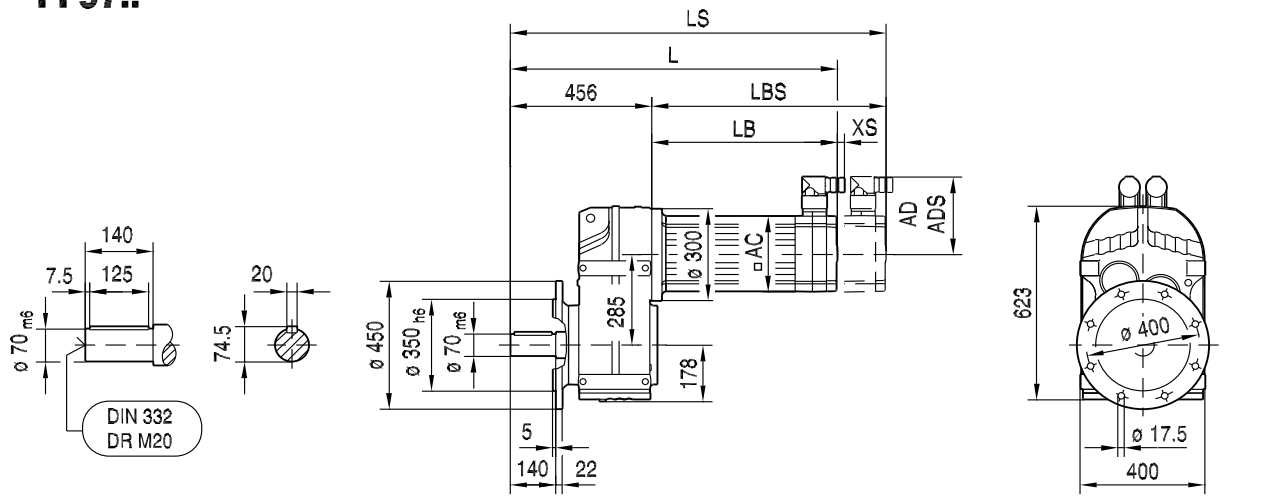

FAF97..

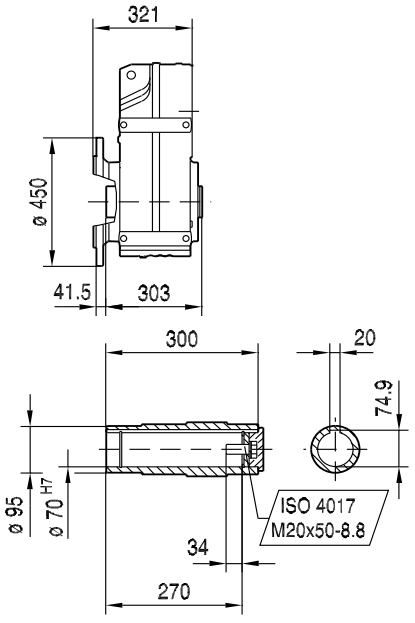

FHF97..

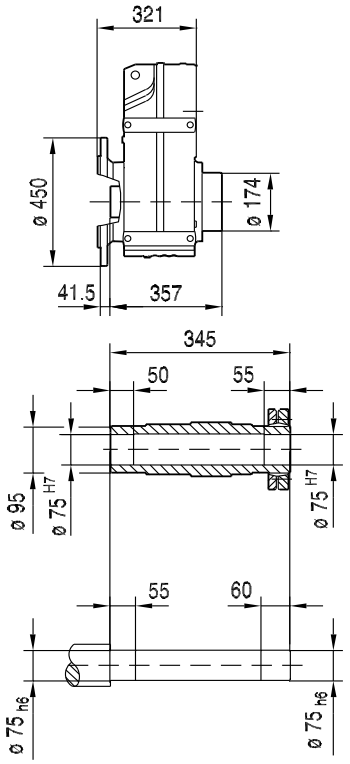

FVF97..

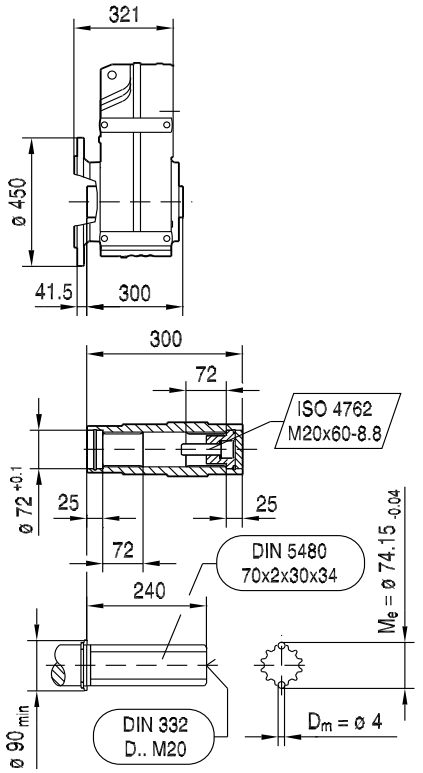

(→ 144)	CMP80S	CMP80M	CMP80L	CMP100S	CMP100M	CMP100L		
AC	137	137	137	162	162	162		
AD	134	134	134	146	146	146		
ADS	137	137	137	147	147	147		
L	643	677	745	676	716	796		
LS	721	755	823	772	812	892		
LB	187	221	289	220	260	340		
LBS	265	299	367	316	356	436		
XS	37	37	37	37	37	37		

42 044 00 07

FA97..

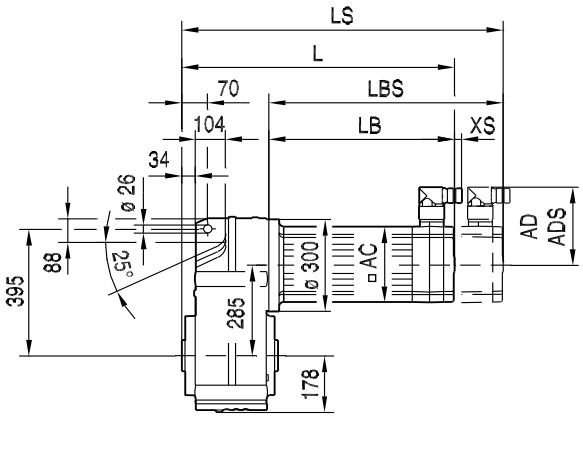

F.. /G

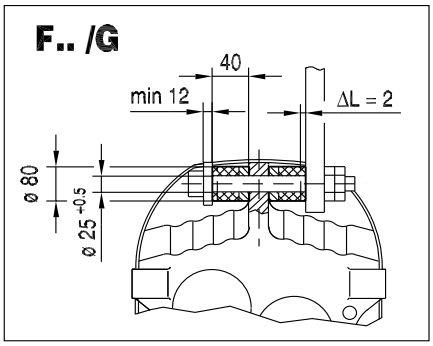

FA97..

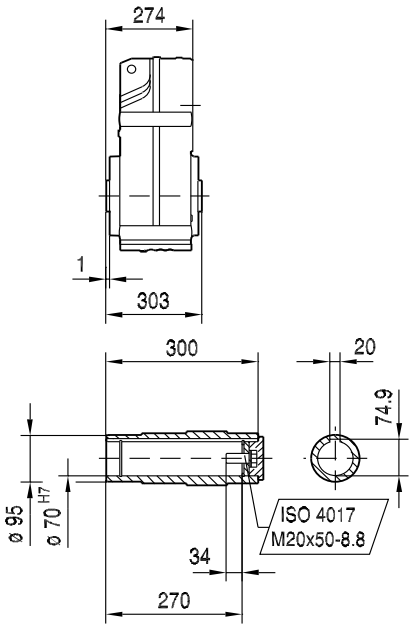

FH97..

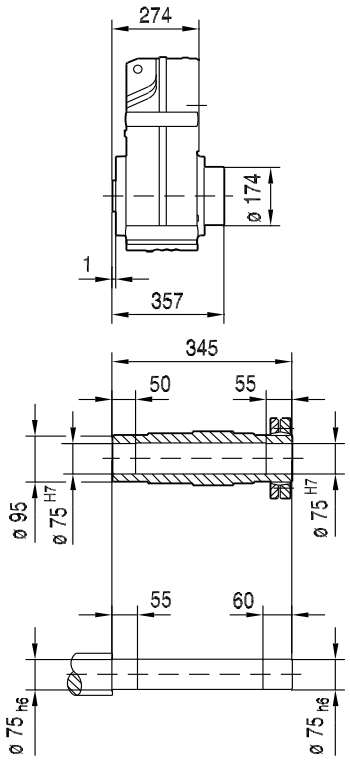

FV97..

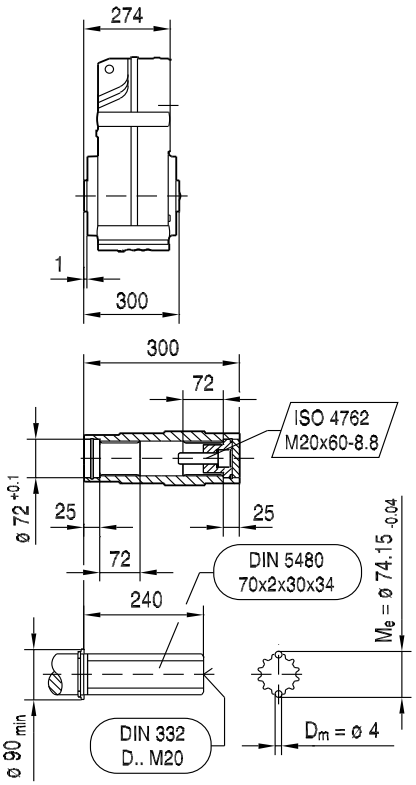

(→ 144)	CMP80S	CMP80M	CMP80L	CMP100S	CMP100M	CMP100L		
AC	137	137	137	162	162	162		
AD	134	134	134	146	146	146		
ADS	137	137	137	147	147	147		
L	461	495	563	494	534	614		
LS	539	573	641	590	630	710		
LB	187	221	289	220	260	340		
LBS	265	299	367	316	356	436		
XS	37	37	37	37	37	37		

FAZ97..

42 045 00 07

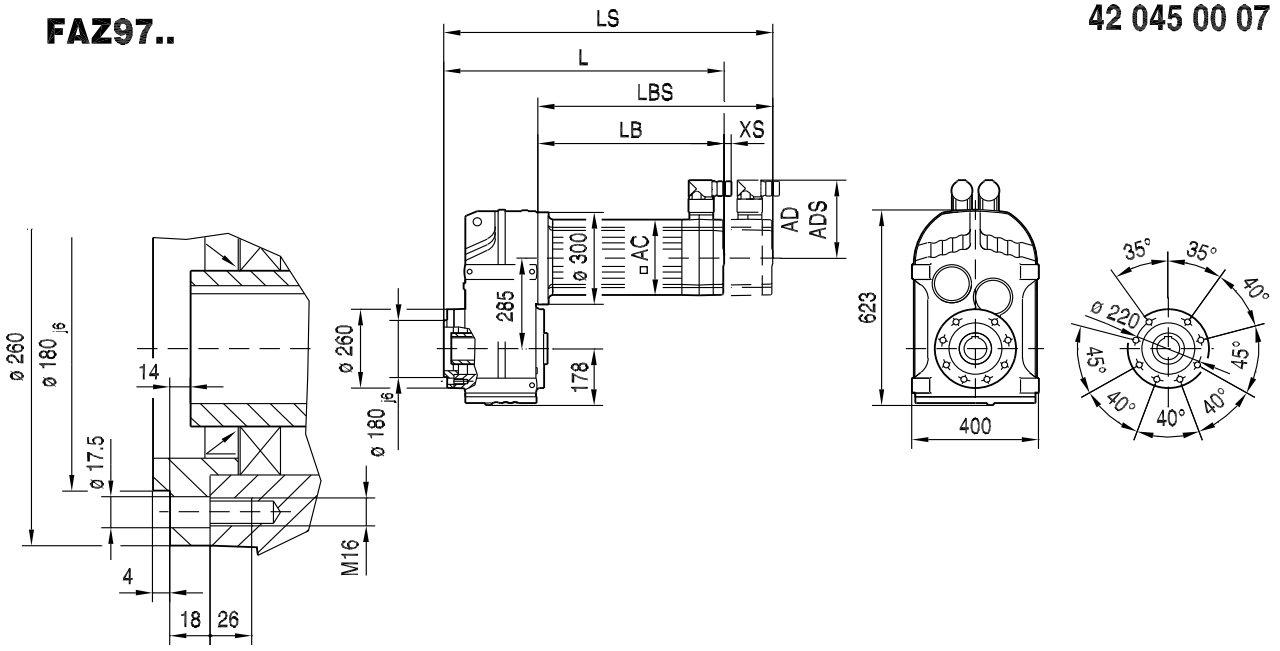

FAZ97..

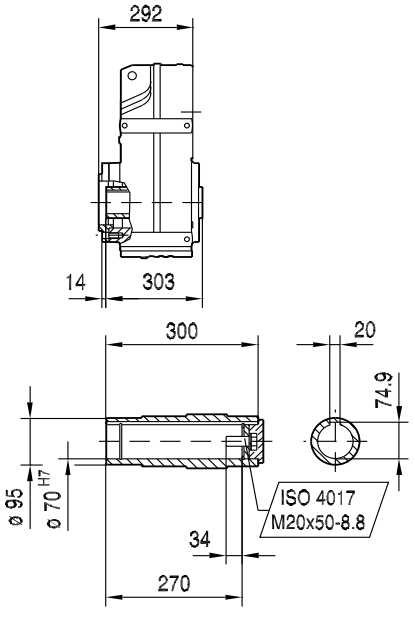

FHZ97..

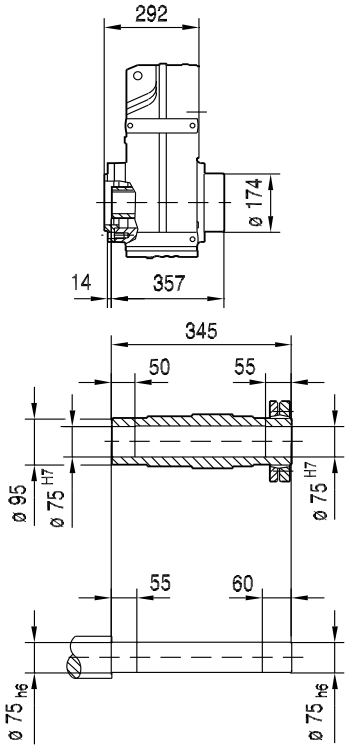

FVZ97..

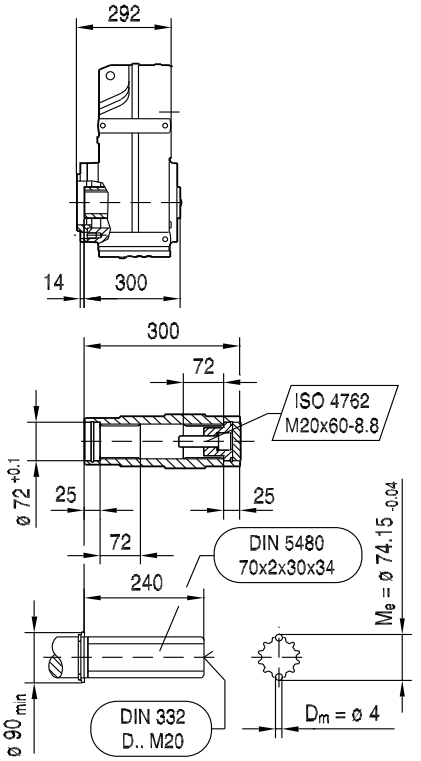

(→ 144)	CMP80S	CMP80M	CMP80L	CMP100S	CMP100M	CMP100L		
AC	137	137	137	162	162	162		
AD	134	134	134	146	146	146		
ADS	137	137	137	147	147	147		
L	479	513	581	512	552	632		
LS	557	591	659	608	648	728		
LB	187	221	289	220	260	340		
LBS	265	299	367	316	356	436		
XS	37	37	37	37	37	37		

FT97..

42 046 00 07

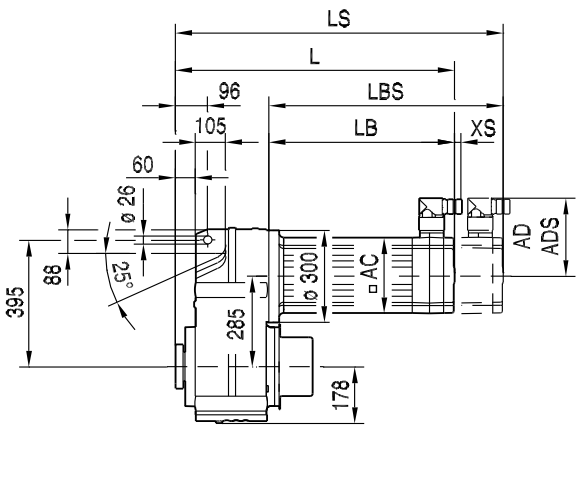

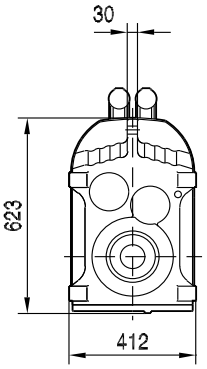

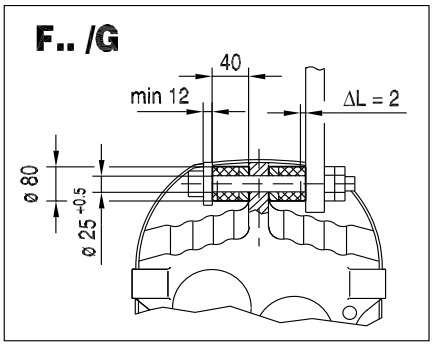

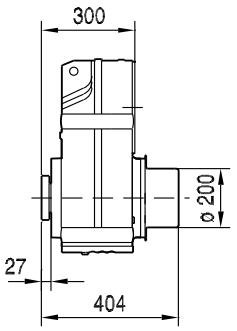

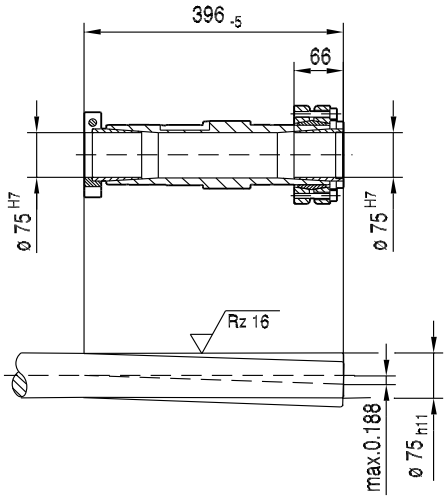

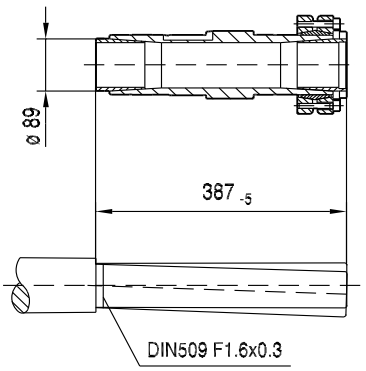

(→ 144)	CMP80S	CMP80M	CMP80L	CMP100S	CMP100M	CMP100L		
AC	137	137	137	162	162	162		
AD	134	134	134	146	146	146		
ADS	137	137	137	147	147	147		
L	487	521	589	520	560	640		
LS	565	599	667	616	656	736		
LB	187	221	289	220	260	340		
LBS	265	299	367	316	356	436		
XS	37	37	37	37	37	37		



9.2.9 F 107

M_{aDyn} [Nm]		CMP		
	i	100S	100M	100L
FA107 2	5.03			
	6.22		650	1070
	7.40	490	775	1280
	8.37	550	870	1450
	9.69	640	1010	1680
	9.96			
	12.33		1290	2130
	14.67	970	1530	2540
	16.58	1090	1730	2870
	19.20	1270	2010	3320
	21.76	1440	2270	3770
	25.14	1660	2630	4360
	27.57	1820	2880	4780
	33.79	2230	3530	5860
FA107 3	31.80		3260	5400
	37.61	2440	3850	6380
	43.03	2790	4410	7300
	50.73	3290	5200	8610
	58.12	3810	6020	>8860
	67.62	4430	7010	>8860
	74.52	4880	7720	>8860
	83.99	5500	8700	>8860
	88.49	5740	>8860	>8860
	92.47	6060	>8860	>8860
	101.38	6570	>8860	>8860
	117.94	7650	>8860	>8860
	129.97	8430	>8860	>8860
	146.49	>8860	>8860	>8860
	161.28	>8860	>8860	>8860
	178.64	>8860	>8860	>8860
	199.31	>8860	>8860	>8860
	215.37	>8860		
	254.40	>8860		

→ 144

m [kg]		CMP		
	s	100S	100M	100L
FA107	2	245	245	255
FA107	3	250	255	265
FAF: + 21.0 kg / F: + 16.6 kg / FF: + 43.9 kg				



CMP..	i	n_{epk} [1/min]	η [%]	c_{TG} FA [Nm/']	FAF [Nm/']	F [Nm/']	FF [Nm/']	φ /R [']
FA107 2	5.03	2797	97	1359	1359	722	666	7
	6.22	3197	97	1359	1359	722	666	7
	7.40	3597	97	1359	1359	722	666	7
	8.37	3924	97	1359	1359	722	666	7
	9.69	4500	97	1359	1359	722	666	7
	9.96	4500	97	1612	1612	788	722	5
	12.33	4500	97	1612	1612	788	722	5
	14.67	4500	97	1612	1612	788	722	5
	16.58	4500	97	1612	1612	788	722	5
	19.20	4500	97	1612	1612	788	722	5
	21.76	4500	97	1612	1612	788	722	5
	25.14	4500	97	1612	1612	788	722	5
	27.57	4500	97	1612	1612	788	722	5
	33.79	4500	97	1612	1612	788	722	5
FA107 3	31.80	3197	95	1806	1806	832	758	6
	37.61	3597	95	1806	1806	832	758	6
	43.03	3924	95	1806	1806	832	758	6
	50.73	4378	95	1806	1806	832	758	6
	58.12	4500	96	1806	1806	832	758	6
	67.62	4500	96	1806	1806	832	758	6
	74.52	4500	96	1806	1806	832	758	6
	83.99	4500	96	1806	1806	832	758	6
	88.49	4378	95	1823	1823	836	761	5
	92.47	4500	96	1806	1806	832	758	6
	101.38	4500	95	1823	1823	836	761	5
	117.94	4500	95	1823	1823	836	761	5
	129.97	4500	95	1823	1823	836	761	5
	146.49	4500	95	1823	1823	836	761	5
	161.28	4500	95	1823	1823	836	761	5
	178.64	4500	95	1823	1823	836	761	5
	199.31	4500	95	1823	1823	836	761	5
	215.37	4500	94	1823	1823	836	761	5
	254.40	4500	94	1823	1823	836	761	5

CMP..							F_{Ramax}				F_{Rapk}			
n_e = 1400	i	M_{amax} [Nm]	M_{apk} [Nm]	$M_{aNotaus}$ [Nm]	n_{ak} [1/min]	J_G 10^{-4} [kgm^2]	FA [N]	FAF [N]	F [N]	FF [N]	FA [N]	FAF [N]	F [N]	FF [N]
FA107 2	5.03	4600	6240	7820	417	439	4520	39000	16400	19200	65000	65000	52500	55300
	6.22	4600	6240	7820	498	311	6920	42600	19000	22200	65000	65000	52500	55300
	7.40	4600	6240	7820	541	236	8400	45800	21300	24800	65000	65000	52500	55300
	8.37	4800	6240	8160	490	195	8720	47400	22000	25600	65000	65000	52500	55300
	9.69	4910	6240	8347	485	154	9670	50000	23500	27300	65000	65000	52500	55300
	9.96	6500	8860	11050	171	280	6200	47000	21500	25300	65000	65000	46500	45600
	12.33	7000	8860	11900	138	209	6580	49800	22600	26600	65000	65000	46500	45600
	14.67	7680	8860	13056	102	164	6050	51500	22400	26500	65000	65000	46500	45600
	16.58	7840	8860	13328	97	138	6870	53800	23900	28200	65000	65000	46500	45600
	19.20	7840	8860	13328	94	112	8600	57400	26500	31200	65000	65000	46500	45600
	21.76	7840	8860	13328	92	92	10100	60600	28800	33800	65000	65000	46500	45600
	25.14	7840	8860	13328	88	76	12000	64500	31500	36800	65000	65000	46500	45600
	27.57	7840	8860	13328	87	66	13200	65000	33300	38800	65000	65000	46500	45600
	33.79	7400	8860	12580	104	43	17700	65000	38300	44900	65000	65000	46500	45600



F..CMP
F..[mm]

CMP..							F_{Ramax}				F_{Rapk}			
n_e = 1400	i	M_{amax} [Nm]	M_{apk} [Nm]	$M_{aNotaus}$ [Nm]	n_{ak} [1/min]	J_G 10^{-4} [kgm^2]	FA [N]	FAF [N]	F [N]	FF [N]	FA [N]	FAF [N]	F [N]	FF [N]
	31.80	7680	8860	13056	69	125	15800	65000	36500	42700	65000	65000	46500	45600
	37.61	7680	8860	13056	74	94	18300	65000	39500	46300	65000	65000	46500	45600
	43.03	7680	8860	13056	79	77	20300	65000	42000	49000	65000	65000	46500	45600
	50.73	7680	8860	13056	85	62	23000	65000	45100	51100	65000	65000	46500	45600
	58.12	7680	8860	13056	88	51	25300	65000	47800	51100	65000	65000	46500	45600
	67.62	7680	8860	13056	92	42	28000	65000	49800	51100	65000	65000	46500	45600
	74.52	7680	8860	13056	94	37	29900	65000	49800	51100	65000	65000	46500	45600
	83.99	7680	8860	13056	83	31	32200	65000	49800	51100	65000	65000	46500	45600
FA107	88.49	7680	8860	13056	79	56	33200	65000	49800	51100	65000	65000	46500	45600
3	92.47	7680	8860	13056	76	27	34100	65000	49800	51100	65000	65000	46500	45600
	101.38	7680	8860	13056	69	47	36000	65000	49800	51100	65000	65000	46500	45600
	117.94	7680	8860	13056	59	39	39300	65000	49800	51100	65000	65000	46500	45600
	129.97	7680	8860	13056	54	34	41400	65000	49800	51100	65000	65000	46500	45600
	146.49	7680	8860	13056	48	29	44200	65000	49800	51100	65000	65000	46500	45600
	161.28	7680	8860	13056	43	25	46600	65000	49800	51100	65000	65000	46500	45600
	178.64	7680	8860	13056	39	19	49100	65000	49800	51100	65000	65000	46500	45600
	199.31	7680	8860	13056	35	16	52000	65000	49800	51100	65000	65000	46500	45600
	215.37	7680	8860	13056	33	15	54000	65000	49800	51100	65000	65000	46500	45600
	254.40	7680	8860	13056	28	12	58600	65000	49800	51100	65000	65000	46500	45600

F107..

42 047 00 07

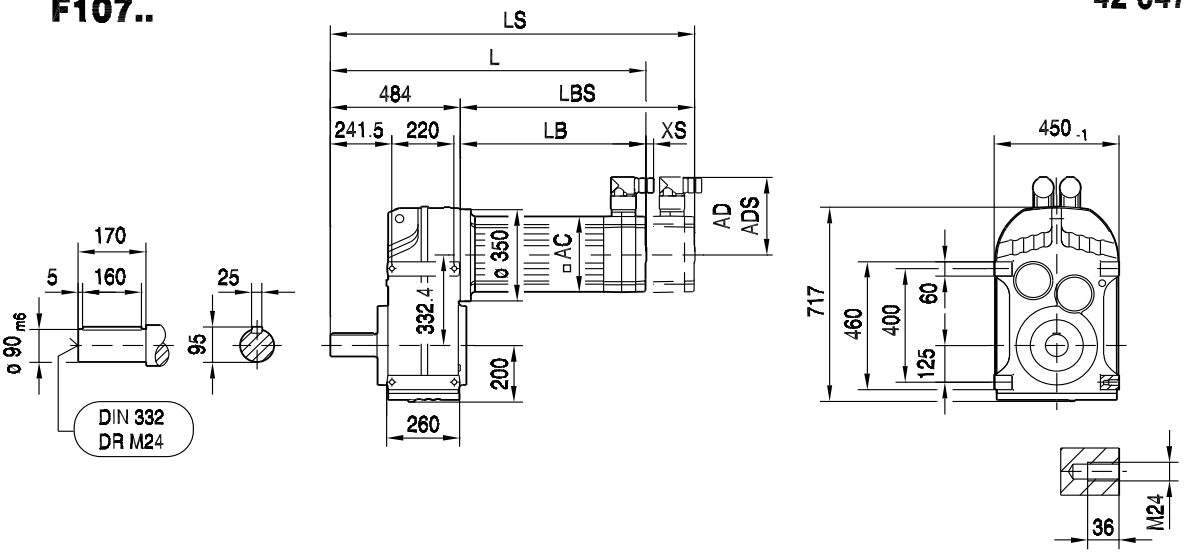

FA107B..

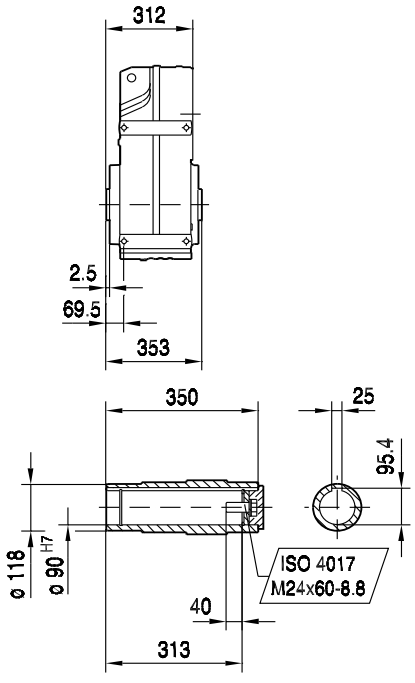

FH107B..

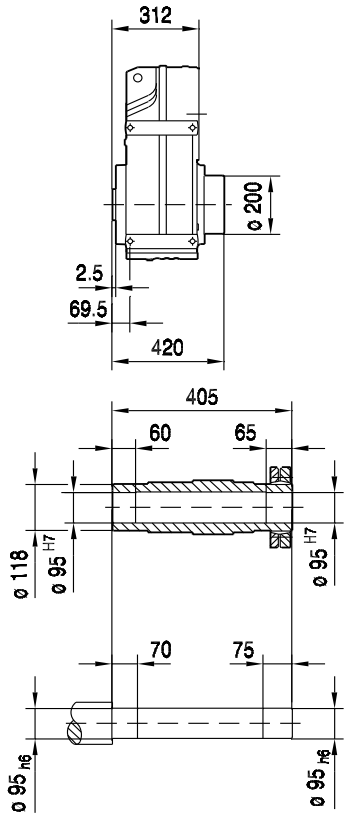

FV107B..

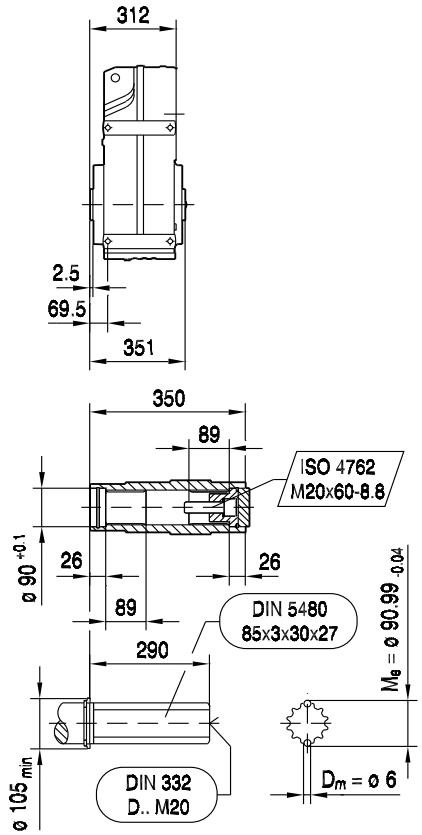

(→ 144)	CMP80L	CMP100S	CMP100M	CMP100L				
AC	0	162	162	162				
AD	0	146	146	146				
ADS	0	147	147	147				
L	484	698	738	818				
LS	484	794	834	914				
LB	0	214	254	334				
LBS	0	310	350	430				
XS	0	37	37	37				

FF107..

42 048 00 07

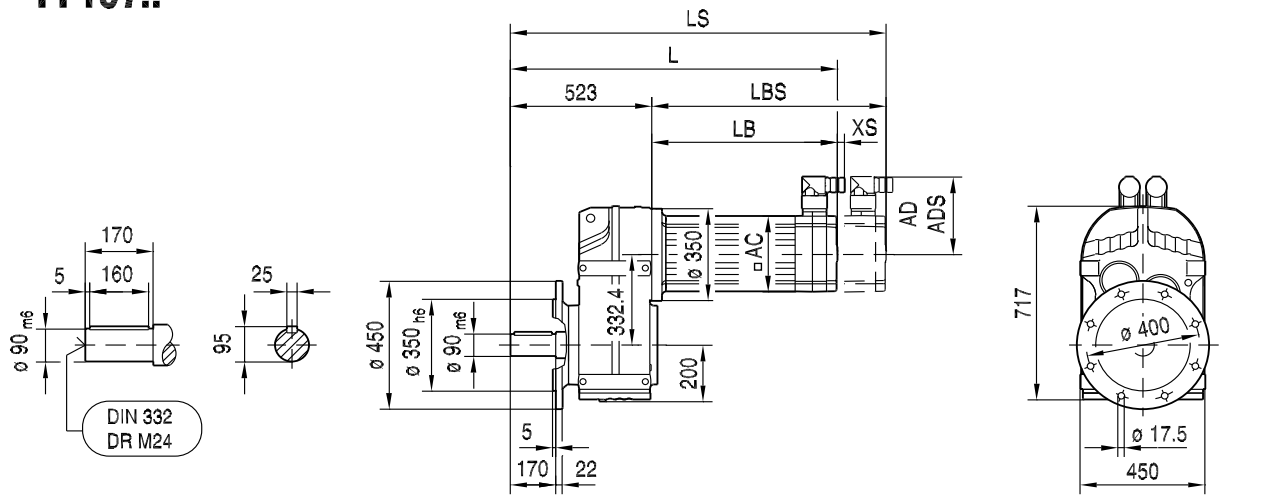

FAF107..

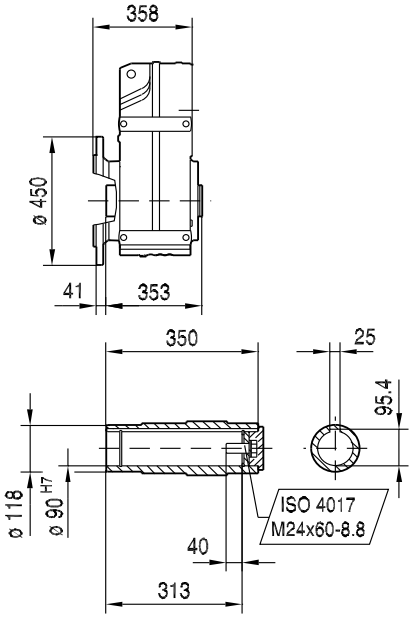

FHF107..

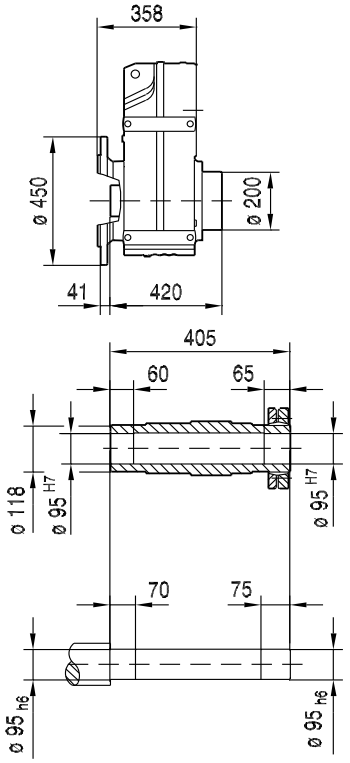

FVF107..

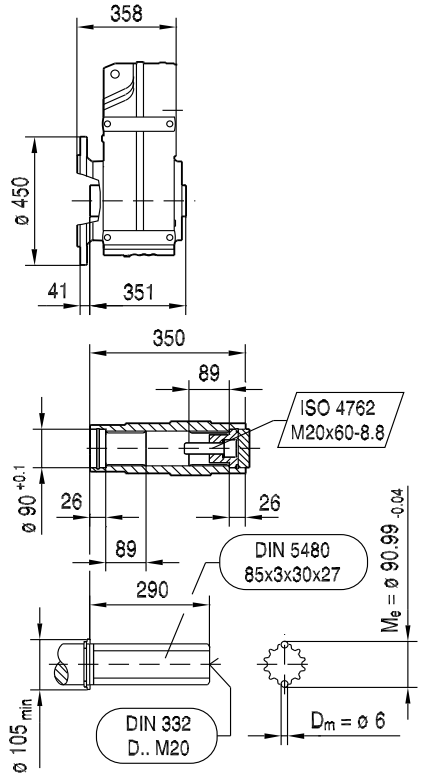

(→ 144)	CMP80L	CMP100S	CMP100M	CMP100L				
AC	0	162	162	162				
AD	0	146	146	146				
ADS	0	147	147	147				
L	523	737	777	857				
LS	523	833	873	953				
LB	0	214	254	334				
LBS	0	310	350	430				
XS	0	37	37	37				

42 049 00 07

FA107..

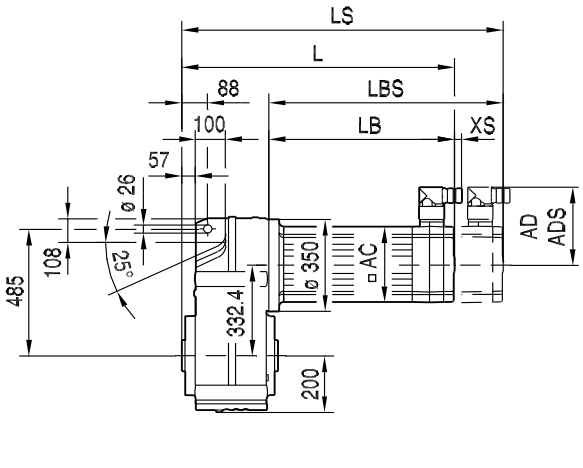

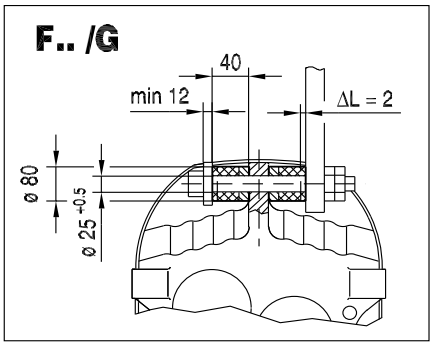

FA107..

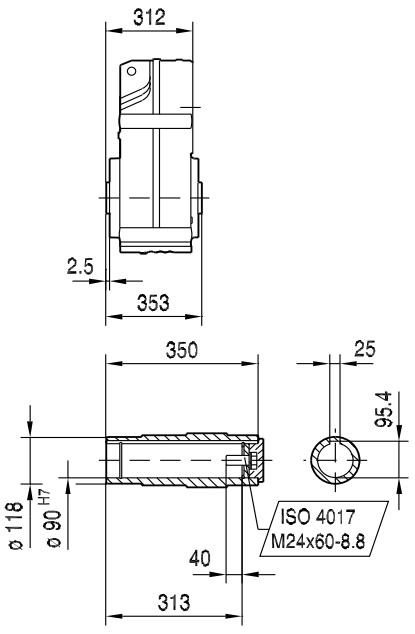

FH107..

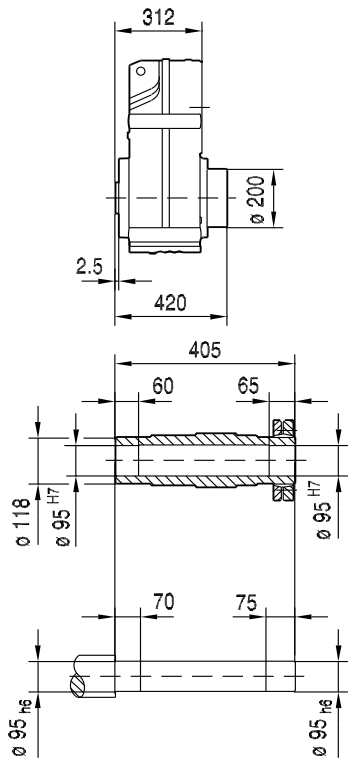

FV107..

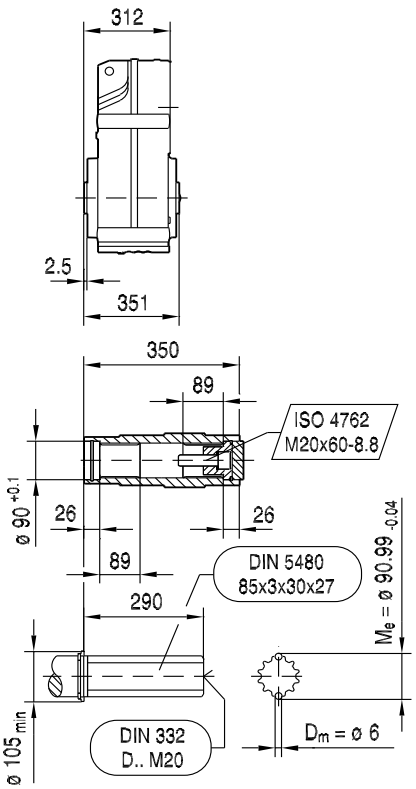

(→ 144)	CMP80L	CMP100S	CMP100M	CMP100L				
AC	0	162	162	162				
AD	0	146	146	146				
ADS	0	147	147	147				
L	312	526	566	646				
LS	312	622	662	742				
LB	0	214	254	334				
LBS	0	310	350	430				
XS	0	37	37	37				

FAZ107..

42 050 00 07

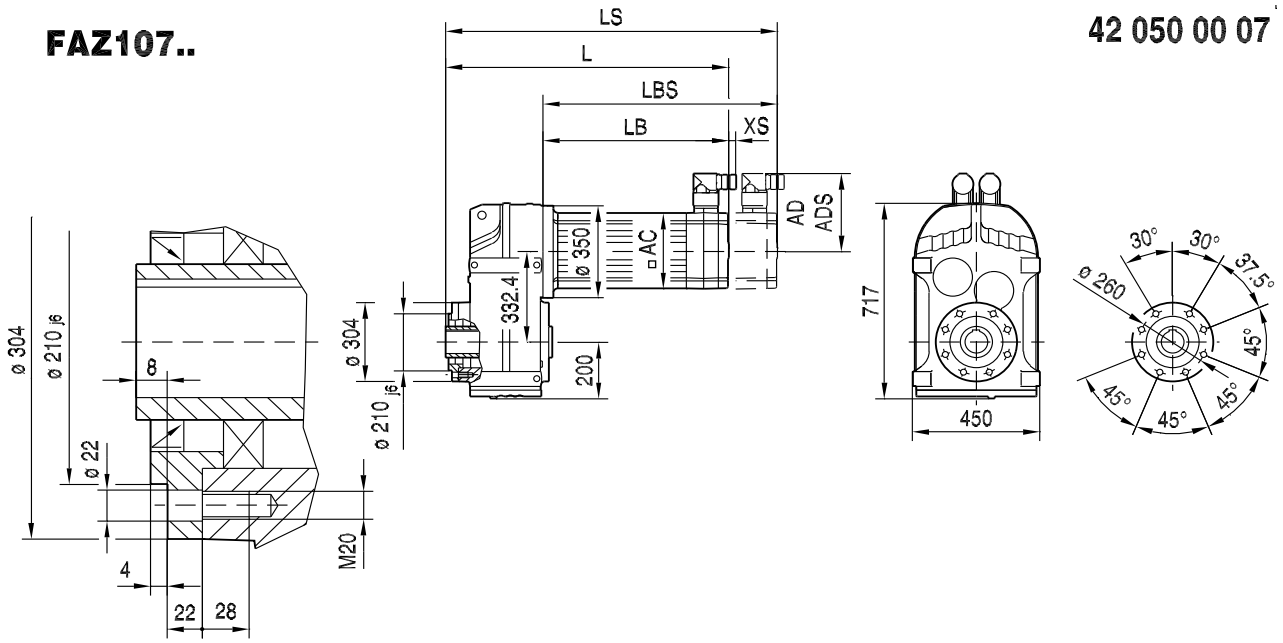

FAZ107..

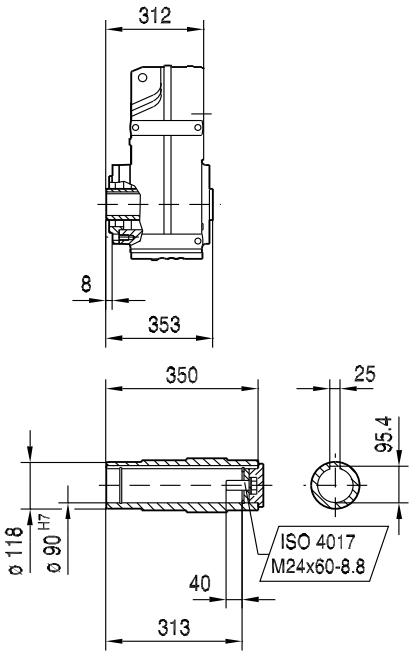

FHZ107..

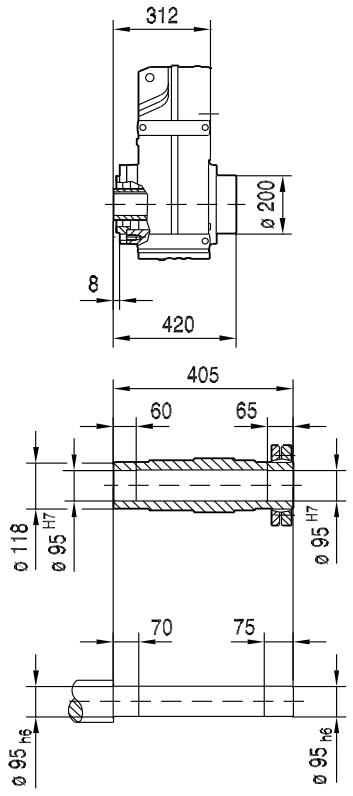

FVZ107..

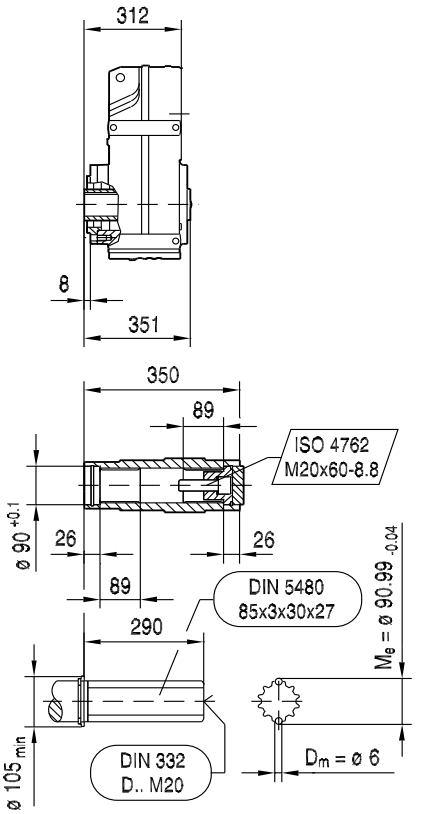

(→ 144)	CMP80L	CMP100S	CMP100M	CMP100L				
AC	0	162	162	162				
AD	0	146	146	146				
ADS	0	147	147	147				
L	312	526	566	646				
LS	312	622	662	742				
LB	0	214	254	334				
LBS	0	310	350	430				
XS	0	37	37	37				

FT107..

42 051 00 07

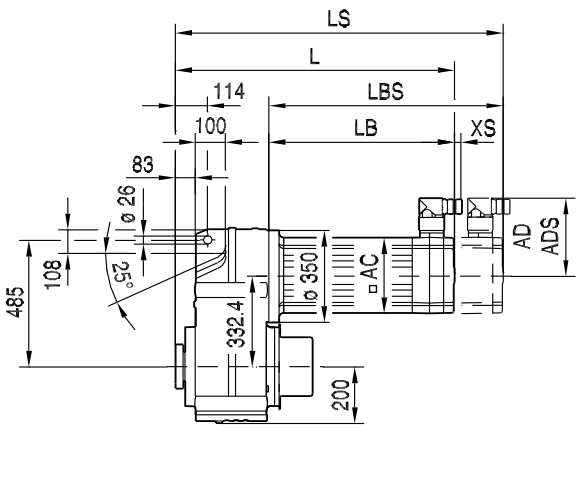

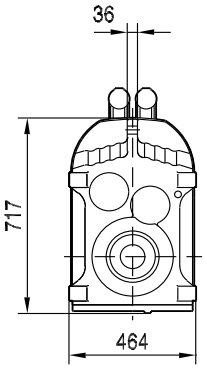

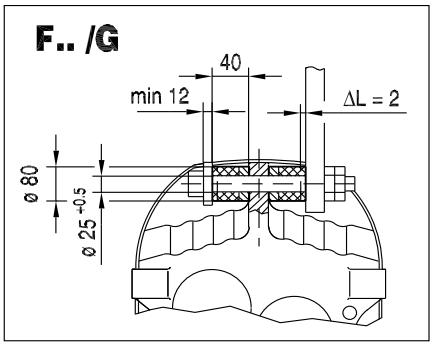

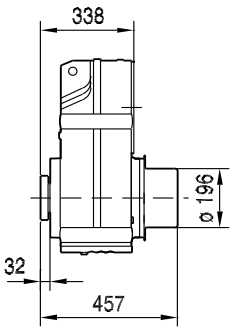

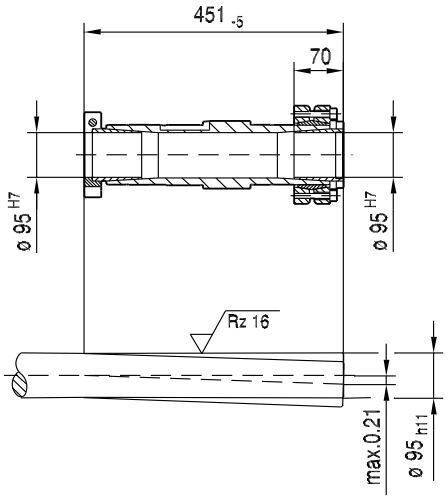

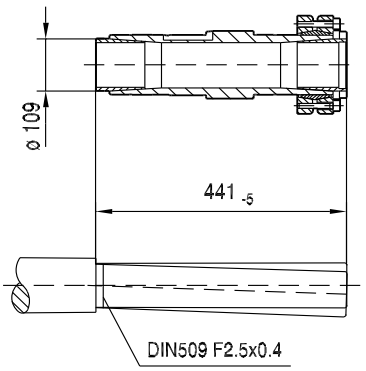

(→ 144)	CMP80L	CMP100S	CMP100M	CMP100L				
AC	0	162	162	162				
AD	0	146	146	146				
ADS	0	147	147	147				
L	338	552	592	672				
LS	338	648	688	768				
LB	0	214	254	334				
LBS	0	310	350	430				
XS	0	37	37	37				

10 K..CMP

10.1 K, KA, KV, KH, KF, KAF, KAV, KHF, KA../T, KV../T, KH../T, KAZ, KVZ, KHZ..CMP

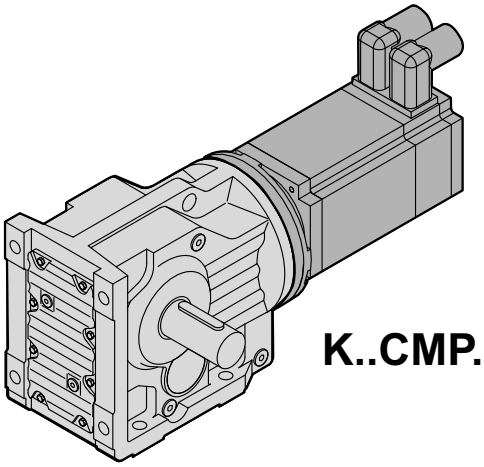

K..CMP..

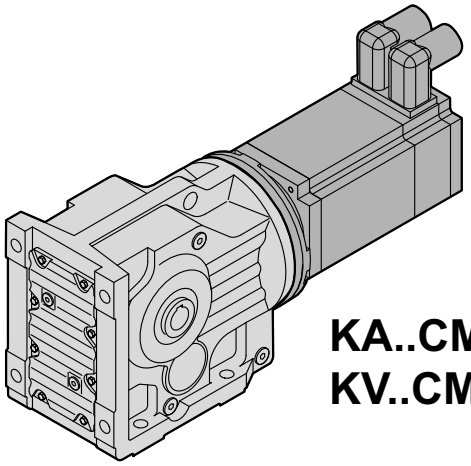

KA..CMP..
KV..CMP..

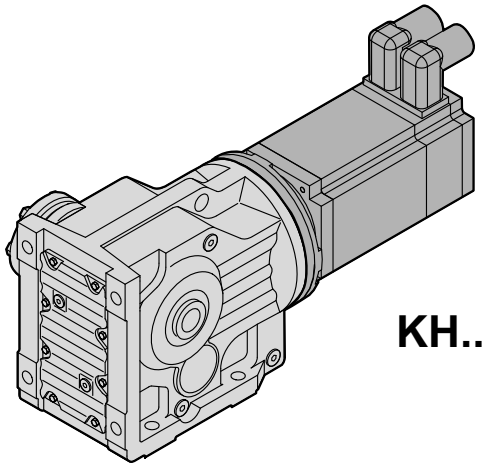

KH..CMP..

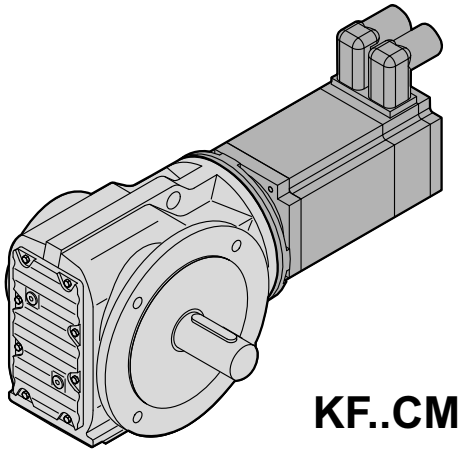

KF..CMP..

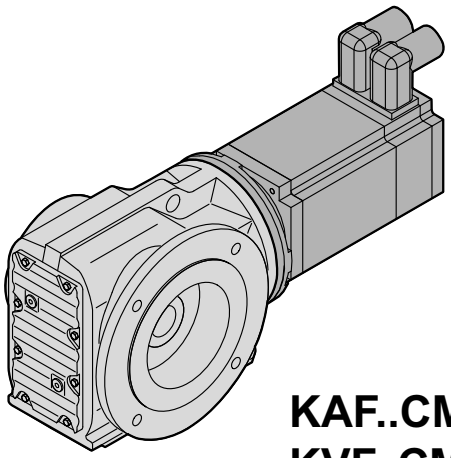

KAF..CMP..
KVF..CMP..

65963axx

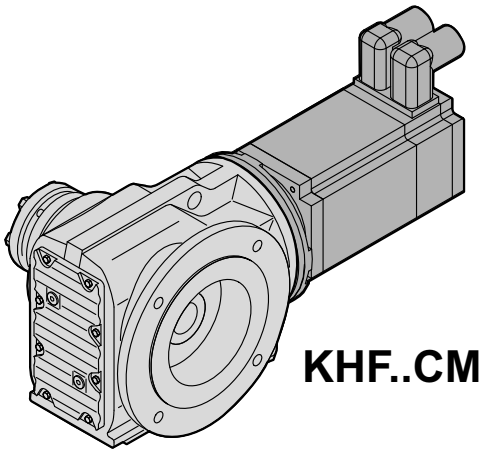

KHF..CMP..

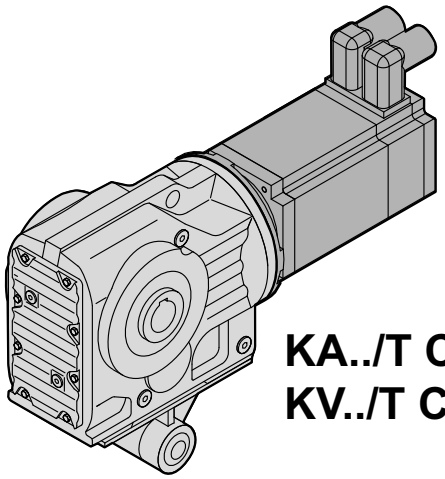

KA../T CMP..
KV../T CMP..

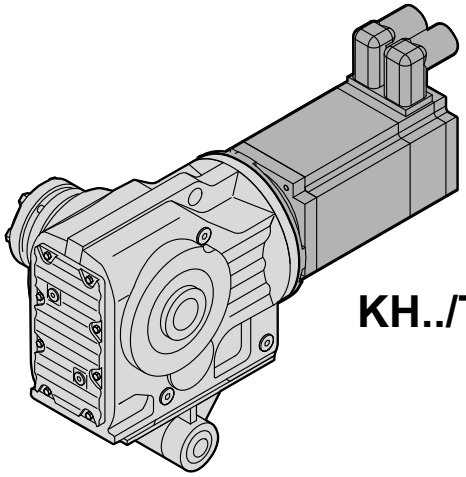

KH../T CMP..

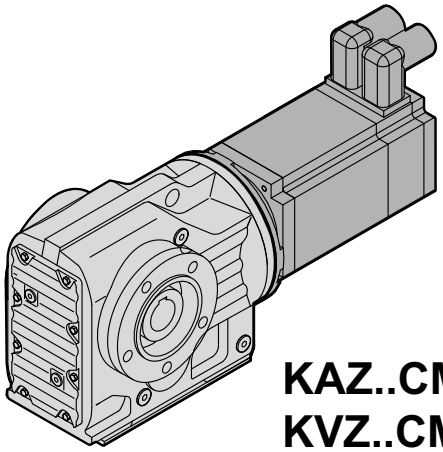

KAZ..CMP..
KVZ..CMP..

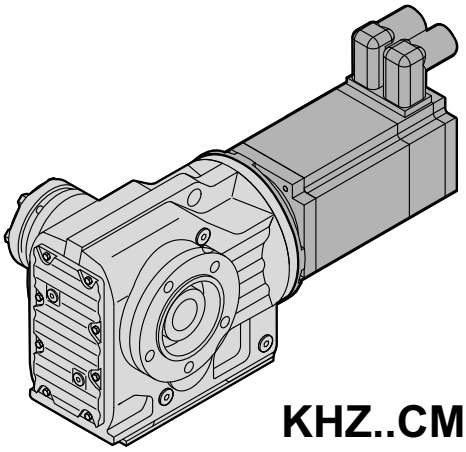

KHZ..CMP..

65964axx

10.2 K..[mm]

10.2.1 K 37

M_{aDyn} [Nm]		CMP								
	i	40M	50S	50M	50L	63S	63M	63L	71S	71M
K37 3	3.98	15	20	39	59	42	82	116	73	118
	5.36	20	27	53	79	57	110	156	99	158
	6.37	23	32	63	94	68	131	186	117	188
	6.80	25	34	67	101	72	140	198	125	>199
	7.96	29	40	79	118	85	164	>199	147	>199
	8.91	33	44	88	132	95	183	>199	164	>199
	10.49	38	52	104	155	112	>199	>199	193	>199
	12.14	44	61	120	179	129	>199		>199	
	13.08	48	65	129	193	139	>240	>240	>240	>240
	15.31	56	76	151	225	163	>240	>240	>240	>240
	17.15	63	86	170	>240	183	>240	>240	>240	>240
	20.19	74	101	200	>240	215	>240	>240	>240	>240
	23.36	85	117	230	>240	>240	>240		>240	
	24.99	91	125	>240	>240	>240	>240		>240	
	28.83	105	144	>240		>240				
	29.96	107	146	>230	>230	>230	>230	>230	>230	>230
	35.57	127	174	>230	>230	>230	>230	>230	>230	>230
	37.97	136	186	>230	>230	>230	>230	>230	>230	>230
	44.46	159	215	>230	>230	>230	>230	>230	>230	>230
	49.79	178	>230	>230	>230	>230	>230	>230	>230	>230
	58.60	205	>230	>230	>230	>230	>230	>230	>230	>230
	67.80	>230	>230	>230	>230	>230	>230		>230	
	72.54	>230	>230	>230	>230	>230	>230		>230	
	83.69	>230	>230	>230		>230				
	97.81	>230	>230							
	106.38	>230	>230							

→ 📖 144

m [kg]		CMP								
	s	40M	50S	50M	50L	63S	63M	63L	71S	71M
K37	3	13	15	16	17	17	19	20	20	22
KF: + 2.3 kg / KA: + -0.2 kg / KAF: + 1.5 kg										

CMP..	i	n_{epk} [1/min]	η [%]	c_{TG} K [Nm/']	KF [Nm/']	KA [Nm/']	KAF [Nm/']	φ /R [']
K37 3	3.98	4500	96	13	13	29	29	13
	5.36	4500	96	13	13	29	29	13
	6.37	4500	96	13	13	29	29	13
	6.80	4500	96	13	13	29	29	13
	7.96	4500	96	13	13	29	29	13
	8.91	4500	96	13	13	29	29	12
	10.49	4500	96	13	13	29	29	12
	12.14	4500	96	13	13	29	29	12
	13.08	4500	96	17	17	63	63	9
	15.31	4500	96	17	17	63	63	9
	17.15	4500	96	17	17	63	63	8
	20.19	4500	96	17	17	63	63	8
	23.36	4500	96	17	17	63	63	8
	24.99	4500	96	17	17	63	63	8
	28.83	4500	96	17	17	63	63	8
	29.96	4500	94	18	19	85	85	7
	35.57	4500	94	18	19	85	85	7
	37.97	4500	94	18	19	85	85	7
	44.46	4500	94	18	19	85	85	7
	49.79	4500	94	18	19	85	85	7
	58.60	4500	94	18	19	85	85	7
	67.80	4500	94	18	19	85	85	7
	72.54	4500	94	18	19	85	85	7
	83.69	4500	93	18	19	85	85	7
	97.81	4500	93	18	19	85	85	7
	106.38	4500	93	18	19	85	85	7

CMP..							F_{Ramax}				F_{Rapk}			
n_e = 1400	i	M_{amax} [Nm]	M_{apk} [Nm]	$M_{aNotaus}$ [Nm]	n_{ak} [1/min]	J_G 10^{-4} [kgm^2]	K [N]	KF [N]	KA [N]	KAF [N]	K [N]	KF [N]	KA [N]	KAF [N]
K37 3	3.98	125	187	213	377	2.6	1660	2130	2310	2310	5780	5710	7000	7000
	5.36	140	199	238	317	1.7	1810	2340	2530	2530	5650	5640	7000	7000
	6.37	145	199	247	314	1.3	1950	2500	2720	2720	5650	5640	7000	7000
	6.80	150	199	255	294	1.1	1980	2540	2760	2760	5650	5640	7000	7000
	7.96	155	199	264	276	0.85	2110	2700	2940	2940	5650	5640	7000	7000
	8.91	160	199	272	258	0.70	2200	2810	3070	3070	5650	5640	7000	7000
	10.49	160	199	272	276	0.51	2410	3030	3340	3340	5650	5640	7000	7000
	12.14	160	199	272	297	0.40	2600	3240	3600	3600	5650	5640	7000	7000
	13.08	165	240	281	420	1.0	2650	3310	3660	3660	4100	4100	7000	7000
	15.31	175	240	298	346	0.76	2780	3480	3850	3850	4100	4100	7000	7000
	17.15	180	240	306	315	0.62	2900	3630	4020	4020	4100	4100	7000	7000
	20.19	185	240	315	287	0.46	3110	3870	4300	4300	4100	4100	7000	7000
	23.36	195	240	332	240	0.37	3260	4060	4510	4510	4100	4100	7000	7000
	24.99	200	240	340	220	0.33	3330	4150	4600	4600	4100	4100	7000	7000
	28.83	200	240	340	222	0.26	3580	4420	4940	4940	4100	4100	7000	7000
	29.96	200	230	340	157	0.76	3650	4500	5030	5030	5140	5140	7000	7000
	35.57	200	230	340	157	0.60	3970	4860	5460	5460	5140	5140	7000	7000
	37.97	200	230	340	158	0.54	4100	5000	5630	5630	5140	5140	7000	7000
	44.46	200	230	340	157	0.42	4420	5350	6060	6060	5140	5140	7000	7000
	49.79	200	230	340	141	0.36	4660	5610	6380	6380	5140	5140	7000	7000
	58.60	200	230	340	119	0.27	5020	5630	6860	6860	5140	5140	7000	7000
	67.80	200	230	340	103	0.23	5360	5630	7000	7000	5140	5140	7000	7000
	72.54	200	230	340	96	0.21	5520	5630	7000	7000	5140	5140	7000	7000
	83.69	200	230	340	84	0.17	5640	5630	7000	7000	5140	5140	7000	7000
	97.81	200	230	340	72	0.13	5640	5630	7000	7000	5140	5140	7000	7000
	106.38	200	230	340	66	0.12	5640	5630	7000	7000	5140	5140	7000	7000

33 009 00 07

K37..

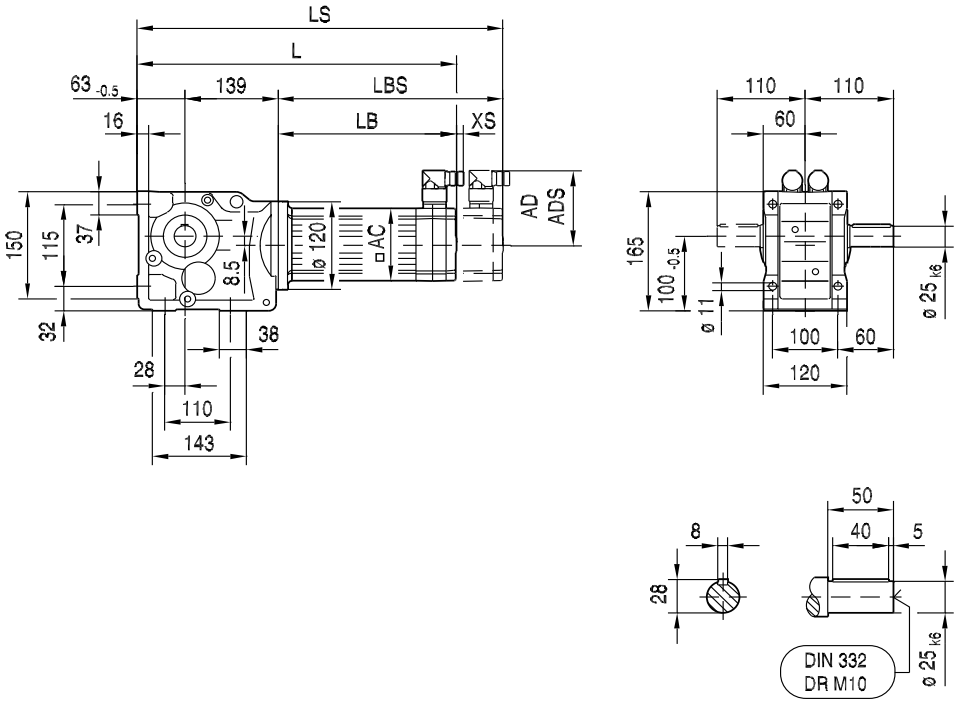

(→ 144)	CMP40M	CMP50S	CMP50M	CMP50L	CMP63S	CMP63M	CMP63L	CMP71S	CMP71M
AC	57	73	73	73	88	88	88	115	115
AD	78	86	86	86	92	92	92	102	102
ADS	78	86	86	86	92	92	92	104	104
L	345	347	386	425	382	432	485	374	402
LS	375	376	415	454	410	460	514	439	467
LB	143	145	184	223	180	230	283	172	200
LBS	173	174	213	252	208	258	312	237	265
XS	19	18	18	18	14	14	14	11	11

33 010 00 07

KF37..

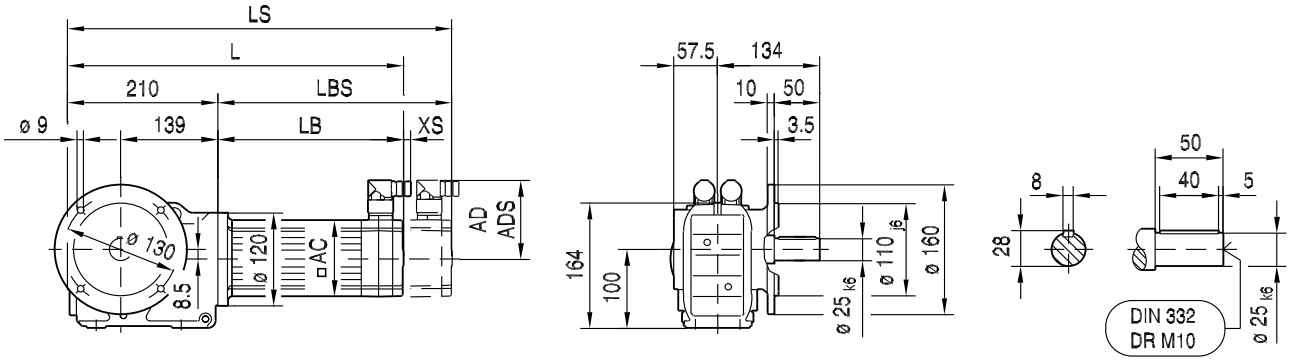

10

KAF37..

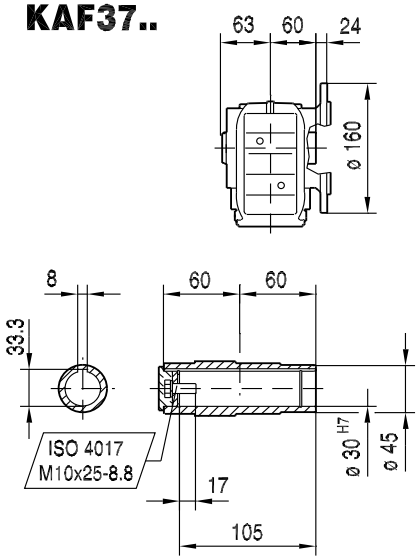

KHF37..

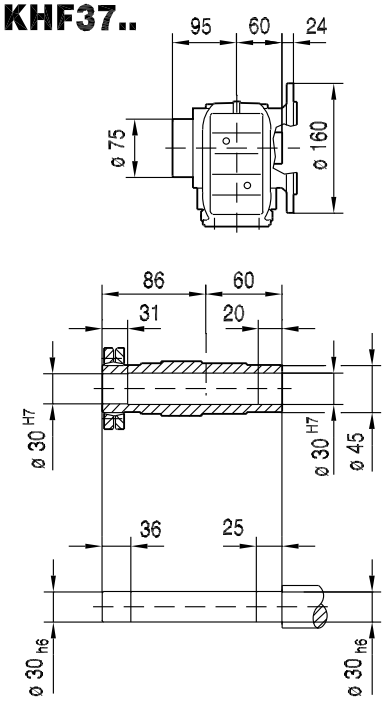

KVF37..

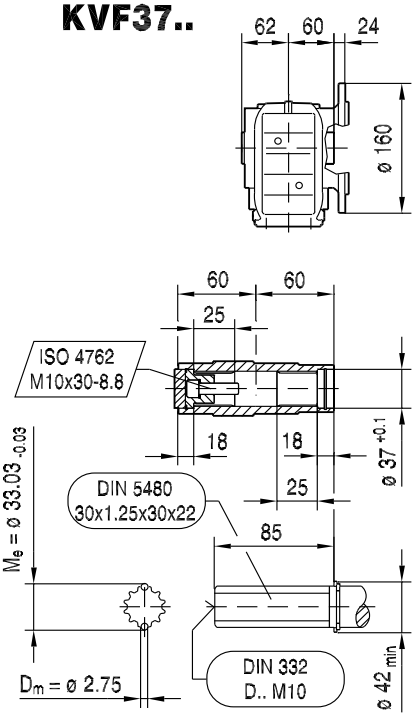

(→ 📖 144)	CMP40M	CMP50S	CMP50M	CMP50L	CMP63S	CMP63M	CMP63L	CMP71S	CMP71M
AC	57	73	73	73	88	88	88	115	115
AD	78	86	86	86	92	92	92	102	102
ADS	78	86	86	86	92	92	92	104	104
L	353	355	394	433	390	440	493	382	410
LS	383	384	423	462	418	468	522	447	475
LB	143	145	184	223	180	230	283	172	200
LBS	173	174	213	252	208	258	312	237	265
XS	19	18	18	18	14	14	14	11	11

KA37..

33 011 00 07

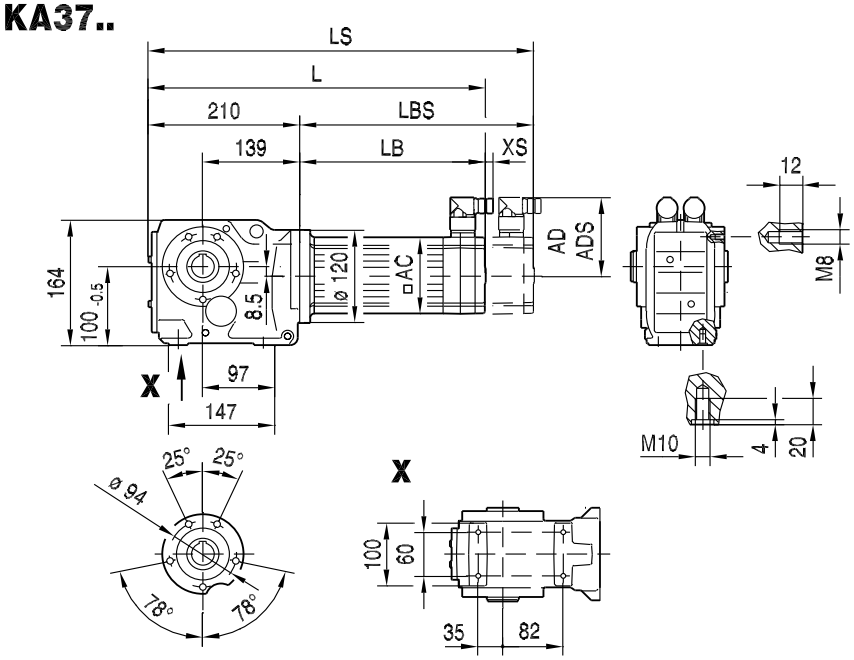

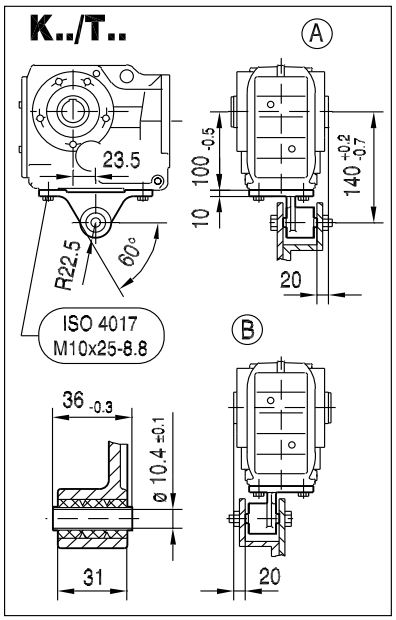

KA37..

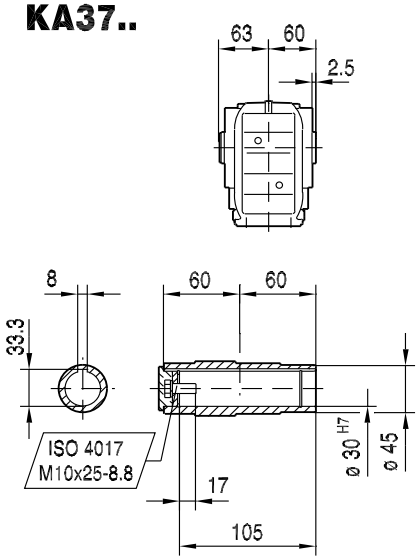

KH37..

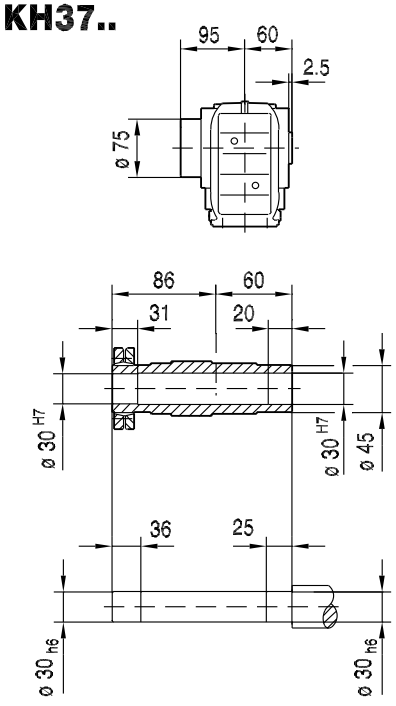

KV37..

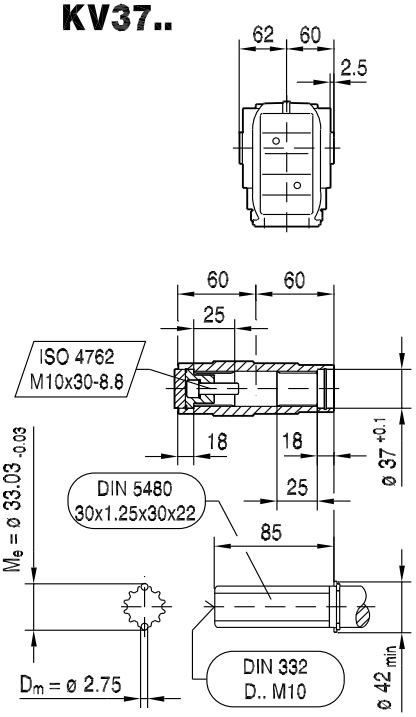

(→ 📖 144)	CMP40M	CMP50S	CMP50M	CMP50L	CMP63S	CMP63M	CMP63L	CMP71S	CMP71M
AC	57	73	73	73	88	88	88	115	115
AD	78	86	86	86	92	92	92	102	102
ADS	78	86	86	86	92	92	92	104	104
L	353	355	394	433	390	440	493	382	410
LS	383	384	423	462	418	468	522	447	475
LB	143	145	184	223	180	230	283	172	200
LBS	173	174	213	252	208	258	312	237	265
XS	19	18	18	18	14	14	14	11	11

KAZ37..

33 012 00 07

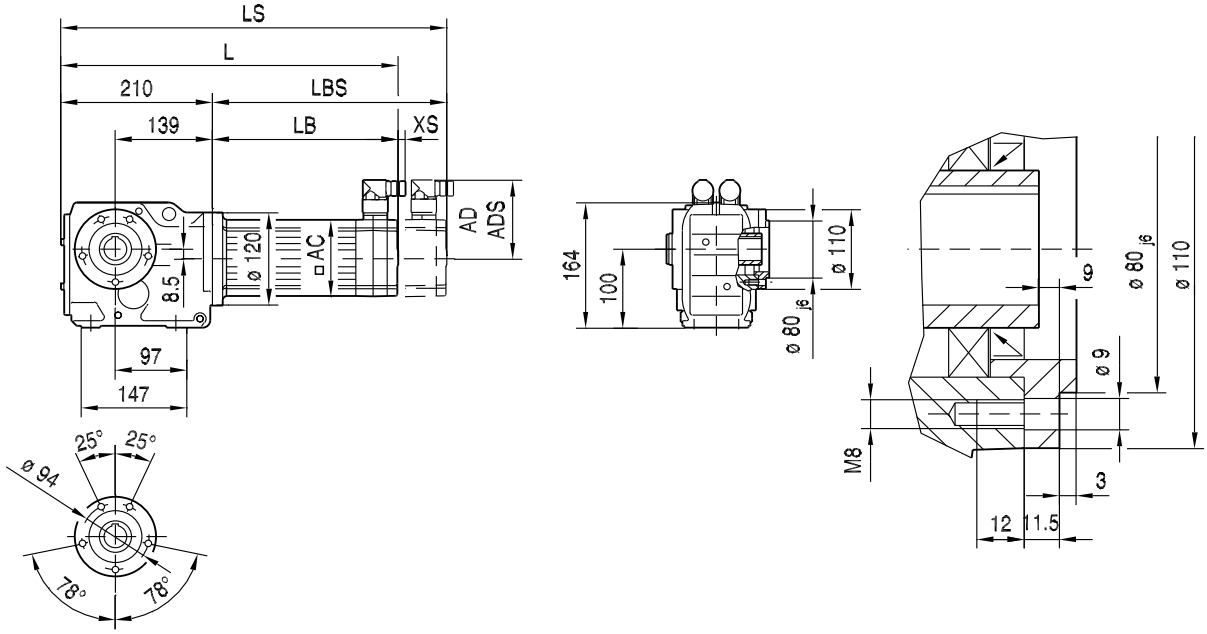

10

KAZ37..

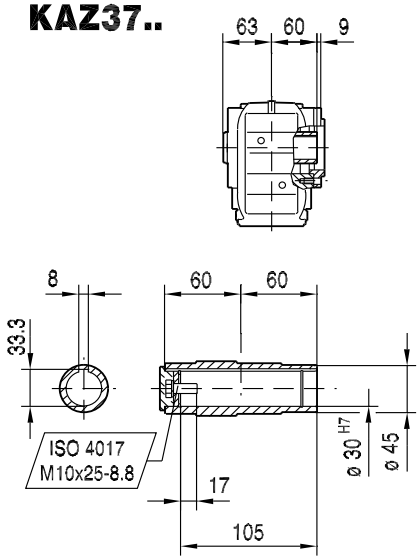

KHZ37..

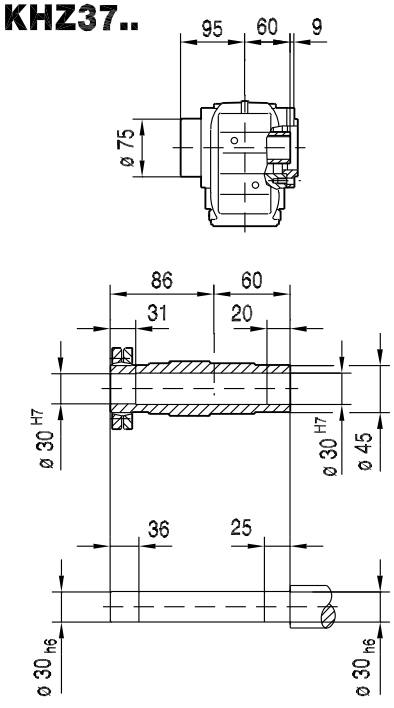

KVZ37..

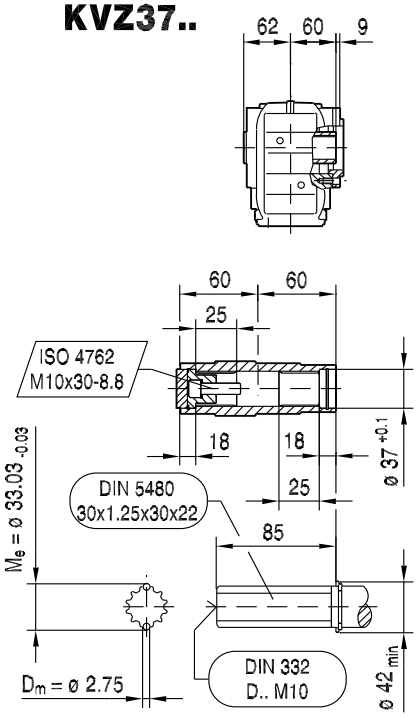

(→ 144)	CMP40M	CMP50S	CMP50M	CMP50L	CMP63S	CMP63M	CMP63L	CMP71S	CMP71M
AC	57	73	73	73	88	88	88	115	115
AD	78	86	86	86	92	92	92	102	102
ADS	78	86	86	86	92	92	92	104	104
L	353	355	394	433	390	440	493	382	410
LS	383	384	423	462	418	468	522	447	475
LB	143	145	184	223	180	230	283	172	200
LBS	173	174	213	252	208	258	312	237	265
XS	19	18	18	18	14	14	14	11	11

KT37..

33 013 00 07

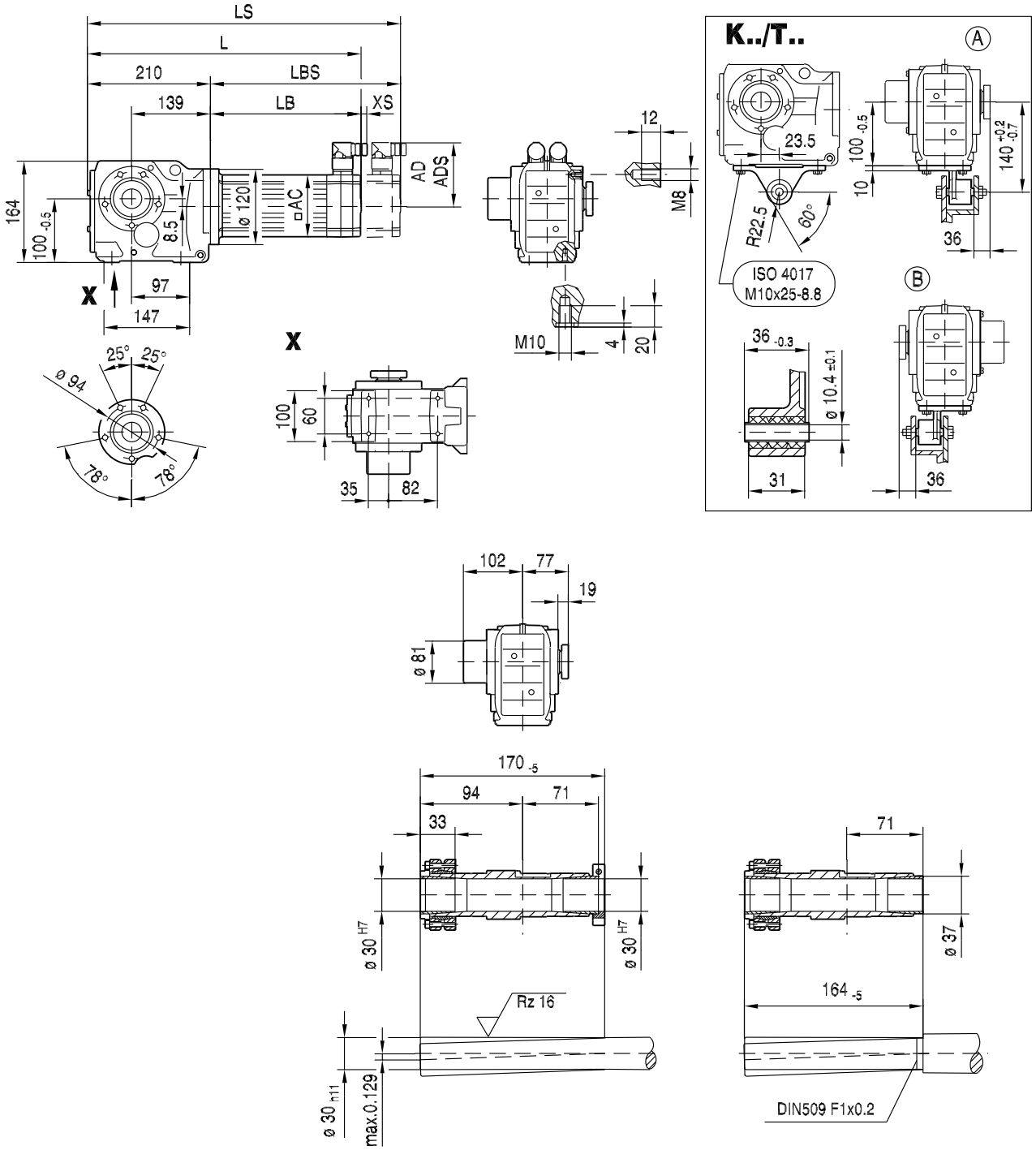

(→ 144)	CMP40M	CMP50S	CMP50M	CMP50L	CMP63S	CMP63M	CMP63L	CMP71S	CMP71M
AC	57	73	73	73	88	88	88	115	115
AD	78	86	86	86	92	92	92	102	102
ADS	78	86	86	86	92	92	92	104	104
L	353	355	394	433	390	440	493	382	410
LS	383	384	423	462	418	468	522	447	475
LB	143	145	184	223	180	230	283	172	200
LBS	173	174	213	252	208	258	312	237	265
XS	19	18	18	18	14	14	14	11	11

10.2.2 K 47

M_{aDyn} [Nm]		CMP									
	i	50S	50M	50L	63S	63M	63L	71S	71M	71L	80S
K47 3	4.64		46	69	49	95	135	86	137	205	188
	5.81	29	57	86	62	119	170	107	172	260	230
	6.58	33	65	97	70	135	192	121	195	295	265
	7.36	37	73	109	78	151	210	136	215	>310	295
	8.56	43	85	127	91	176	245	158	250	>310	>310
	9.10	45	90	135	97	187	265	168	265	>310	>310
	10.56	53	104	156	113	215	305	195	310	>315	>315
	11.77	59	116	174	125	240	>315	215	>315	>315	>315
	12.19	61	121	180	130	250	355	220	360	>435	>435
	13.65	68	135	200	145	280	395	250	400	>435	>435
	15.86	79	157	230	169	325	>435	290	>435	>435	>435
	16.86	84	167	245	180	345	>435	310	>435	>435	>435
	19.58	98	194	285	205	400	>435	360	>435	>435	>435
	21.81	109	215	320	230	>435	>435	400	>435	>435	>435
	24.06	120	235	355	255	>435		>435			
	25.91	129	255	380	275	>435	>435	>435	>435		
	29.32	146	285	430	310	>435		>435			
	31.30	156	305	>435	330	>435		>435			
	35.39	173	340	>435	365	>435	>435	>435	>435	>435	>435
	39.61	194	380	>435	410	>435	>435	>435	>435	>435	>435
	46.03	220	>435	>435	>435	>435	>435	>435	>435	>435	>435
	48.95	235	>435	>435	>435	>435	>435	>435	>435	>435	>435
	56.83	275	>435	>435	>435	>435	>435	>435	>435	>435	>435
	63.30	305	>435	>435	>435	>435	>435	>435	>435	>435	>435
	69.84	340	>435	>435	>435	>435		>435			
	75.20	365	>435	>435	>435	>435	>435	>435	>435		
	85.12	415	>435	>435	>435	>435		>435			
	90.86	>435	>435	>435	>435	>435		>435			
	104.37	>435	>435		>435						
	121.48	>435									
	131.87	>435									

→ 144

m [kg]		CMP									
	s	50S	50M	50L	63S	63M	63L	71S	71M	71L	80S
K47	3	21	22	23	23	25	26	27	28	30	33
KF: + 3.2 kg / KA: + -0.9 kg / KAF: + 2.0 kg											

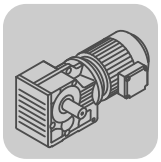

K..CMP
K..[mm]

CMP..	i	n_{epk} [1/min]	η [%]	c_{TG} K [Nm/']	KF [Nm/']	KA [Nm/']	KAF [Nm/']	φ /R [']
K47 3	4.64	4500	96	26	23	50	50	12
	5.81	4500	96	26	23	50	50	12
	6.58	4500	96	26	23	50	50	12
	7.36	4500	96	26	23	50	50	11
	8.56	4500	96	26	23	50	50	11
	9.10	4500	96	26	23	50	50	11
	10.56	4500	96	26	23	50	50	11
	11.77	4500	96	26	23	50	50	10
	12.19	4500	96	33	29	90	90	8
	13.65	4500	96	33	29	90	90	8
	15.86	4500	96	33	29	90	90	8
	16.86	4500	96	33	29	90	90	8
	19.58	4500	96	33	29	90	90	8
	21.81	4500	96	33	29	90	90	8
	24.06	4500	96	33	29	90	90	8
	25.91	4500	96	33	29	90	90	8
	29.32	4500	96	33	29	90	90	8
	31.30	4500	96	33	29	90	90	7
	35.39	4500	94	36	32	117	117	7
	39.61	4500	94	36	32	117	117	7
	46.03	4500	94	36	32	117	117	7
	48.95	4500	94	36	32	117	117	7
	56.83	4500	94	36	32	117	117	7
	63.30	4500	94	36	32	117	117	7
	69.84	4500	94	36	32	117	117	6
	75.20	4500	94	36	32	117	117	6
	85.12	4500	94	36	32	117	117	6
	90.86	4500	94	36	32	117	117	6
	104.37	4500	93	36	32	117	117	6
	121.48	4500	93	36	32	117	117	6
	131.87	4500	93	36	32	117	117	6

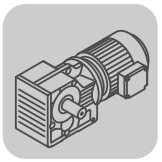

CMP..							F_{Ramax}				F_{Rapk}			
n_e = 1400	i	M_{amax} [Nm]	M_{apk} [Nm]	$M_{aNotaus}$ [Nm]	n_{ak} [1/min]	J_G 10^{-4} [kgm^2]	K [N]	KF [N]	KA [N]	KAF [N]	K [N]	KF [N]	KA [N]	KAF [N]
K47 3	4.64	205	300	349	302	4.4	2980	2970	2040	2040	7060	7060	10000	10000
	5.81	230	305	391	258	3.6	3140	3140	2100	2100	7020	7020	10000	10000
	6.58	240	310	408	228	2.8	3270	3270	2190	2190	6970	6970	10000	10000
	7.36	250	310	425	217	2.3	3380	3390	2270	2270	6970	6970	10000	10000
	8.56	270	310	459	175	1.8	3500	3520	2310	2310	6970	6970	10000	10000
	9.10	280	310	476	165	1.6	3540	3560	2310	2310	6970	6970	10000	10000
	10.56	280	315	476	170	1.2	3830	3840	2580	2580	6920	6920	10000	10000
	11.77	280	315	476	178	1.0	4060	4050	2770	2770	6920	6920	10000	10000
	12.19	350	435	595	279	2.4	3720	3770	2330	2330	900	900	10000	10000
	13.65	360	435	612	249	2.0	3890	3940	2450	2450	900	900	10000	10000
	15.86	380	435	646	208	1.6	4080	4130	2570	2570	900	900	10000	10000
	16.86	380	435	646	214	1.4	4220	4270	2690	2690	900	900	10000	10000
	19.58	400	435	680	179	1.1	4440	4480	2820	2820	900	900	10000	10000
	21.81	400	435	680	179	0.91	4710	4740	3070	3070	900	900	10000	10000
	24.06	400	435	680	179	0.75	4970	4990	3300	3300	900	900	10000	10000
	25.91	400	435	680	178	0.68	5170	5180	3470	3470	900	900	10000	10000
	29.32	400	435	680	177	0.55	5520	5500	3780	3780	900	900	10000	10000
	31.30	400	435	680	179	0.50	5700	5680	3940	3940	900	900	10000	10000
	35.39	400	435	680	93	1.3	5920	5920	4270	4270	900	900	10000	10000
	39.61	400	435	680	96	1.1	5920	5920	4580	4580	900	900	10000	10000
	46.03	400	435	680	100	0.88	5920	5920	5000	5000	900	900	10000	10000
	48.95	400	435	680	100	0.80	5920	5920	5190	5190	900	900	10000	10000
	56.83	400	435	680	104	0.64	5920	5920	5640	5640	900	900	10000	10000
	63.30	400	435	680	104	0.54	5920	5920	5990	5990	900	900	10000	10000
	69.84	400	435	680	100	0.45	5920	5920	6320	6320	900	900	10000	10000
	75.20	400	435	680	93	0.42	5920	5920	6570	6570	900	900	10000	10000
	85.12	400	435	680	82	0.35	5920	5920	7000	7000	900	900	10000	10000
	90.86	400	435	680	77	0.32	5920	5920	7240	7240	900	900	10000	10000
	104.37	400	435	680	67	0.26	5920	5920	7760	7760	900	900	10000	10000
	121.48	400	435	680	58	0.21	5920	5920	8360	8360	900	900	10000	10000
	131.87	400	435	680	53	0.18	5920	5920	8700	8700	900	900	10000	10000

33 014 00 07

K47..

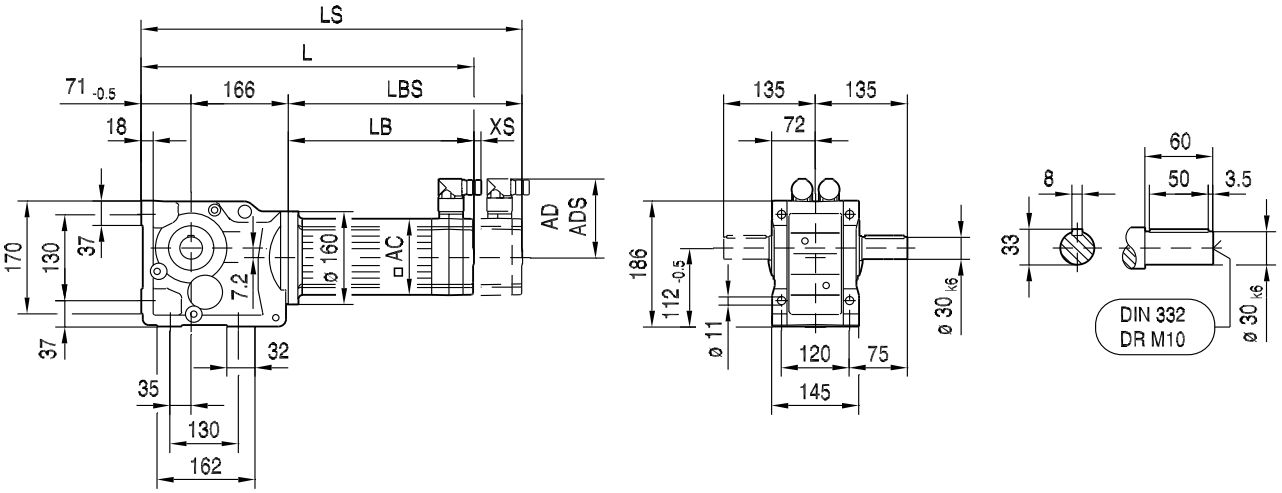

KA47B..

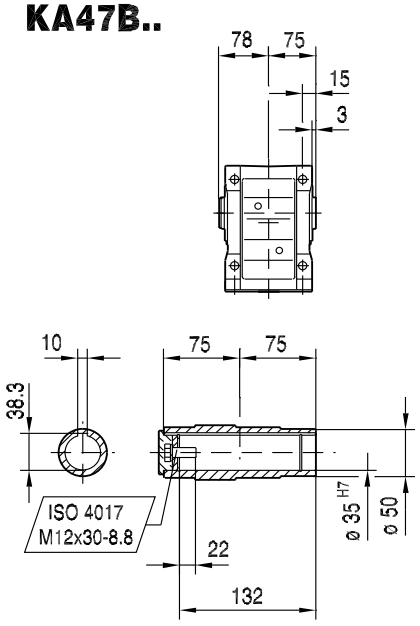

KH47B..

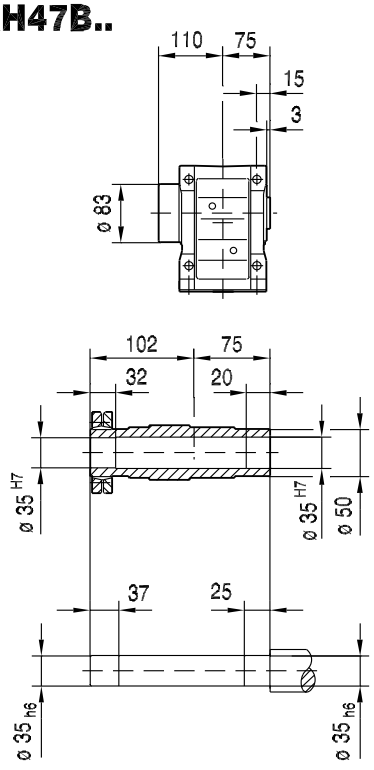

KV47B..

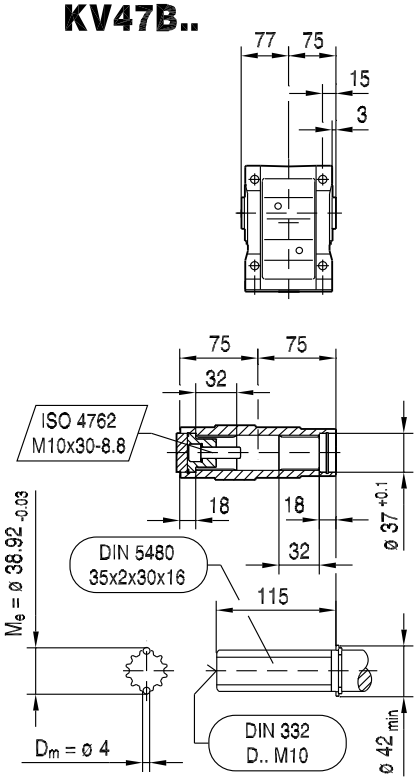

(→ 📖 144)	CMP50S	CMP50M	CMP50L	CMP63S	CMP63M	CMP63L	CMP71S	CMP71M	CMP71L	CMP80S
AC	73	73	73	88	88	88	115	115	115	137
AD	86	86	86	92	92	92	102	102	102	134
ADS	86	86	86	92	92	92	104	104	104	137
L	376	415	454	410	460	510	403	428	478	443
LS	405	444	483	439	489	539	468	493	543	521
LB	139	178	217	173	223	273	166	191	241	206
LBS	168	207	246	202	252	302	231	256	306	284
XS	18	18	18	14	14	14	11	11	11	37

33 015 00 07

KF47..

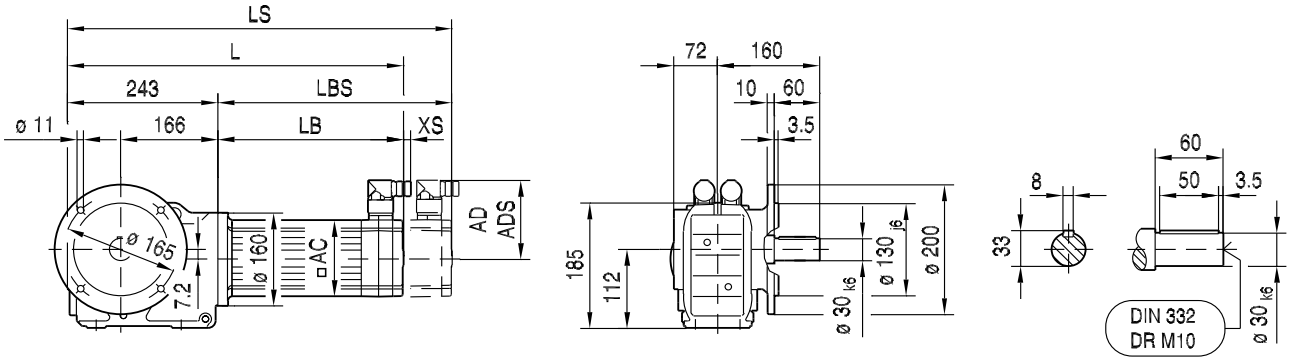

10

KAF47..

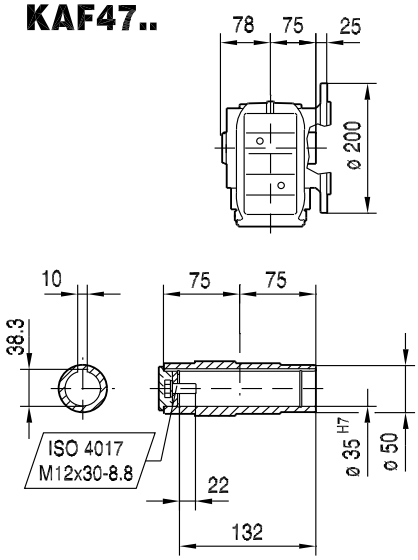

KHF47..

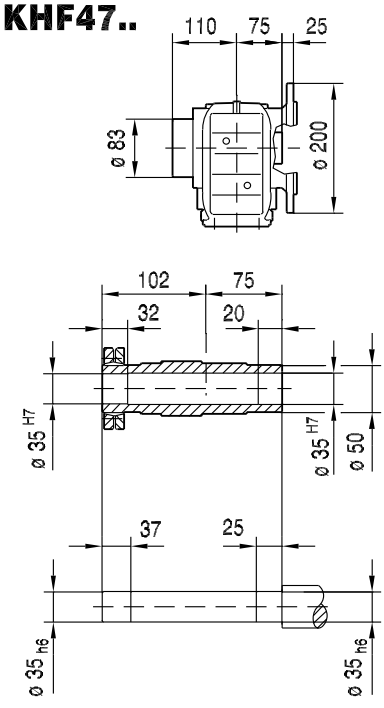

KVF47..

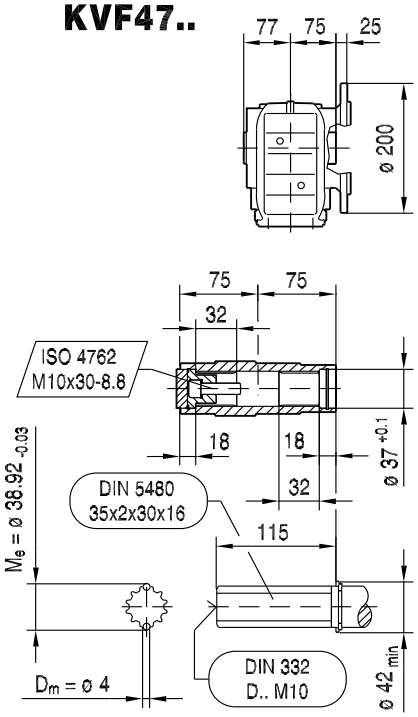

(→ 📖 144)	CMP50S	CMP50M	CMP50L	CMP63S	CMP63M	CMP63L	CMP71S	CMP71M	CMP71L	CMP80S
AC	73	73	73	88	88	88	115	115	115	137
AD	86	86	86	92	92	92	102	102	102	134
ADS	86	86	86	92	92	92	104	104	104	137
L	382	421	460	416	466	516	409	434	484	449
LS	411	450	489	445	495	545	474	499	549	527
LB	139	178	217	173	223	273	166	191	241	206
LBS	168	207	246	202	252	302	231	256	306	284
XS	18	18	18	14	14	14	11	11	11	37

KA47..

33 016 00 07

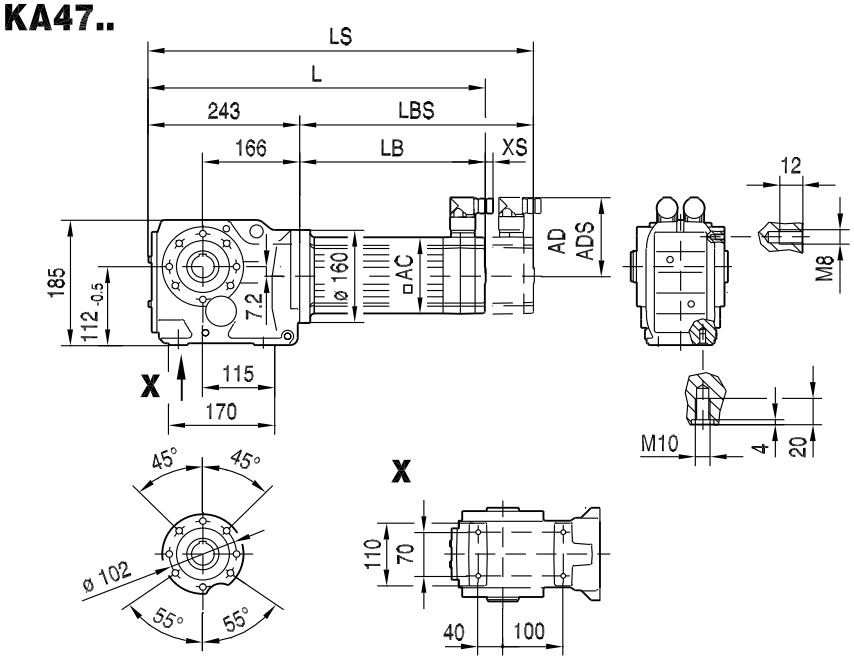

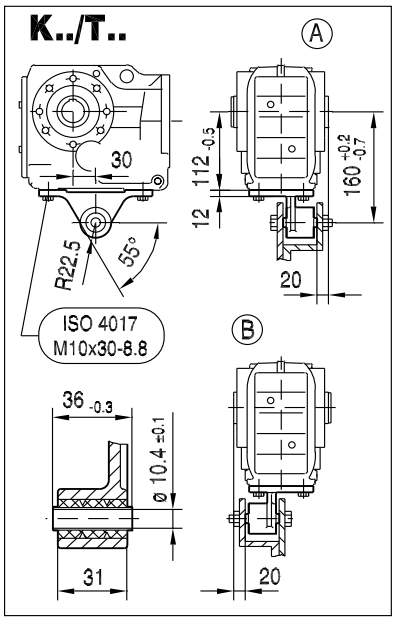

KA47..

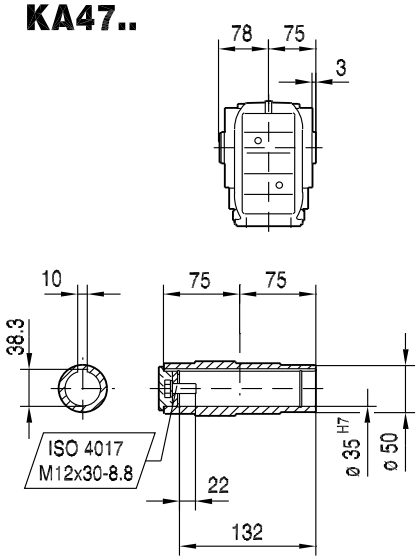

KH47..

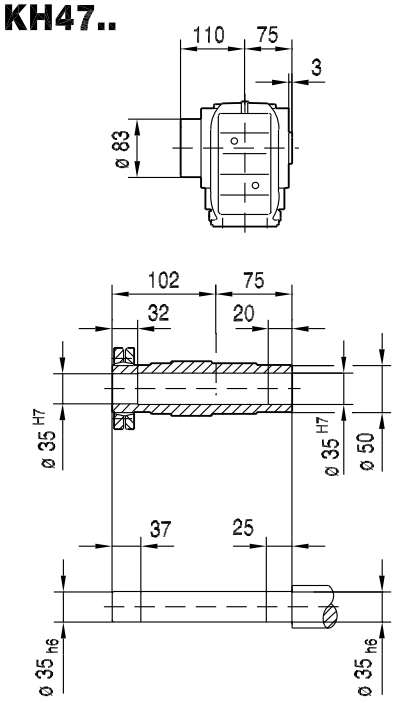

KV47..

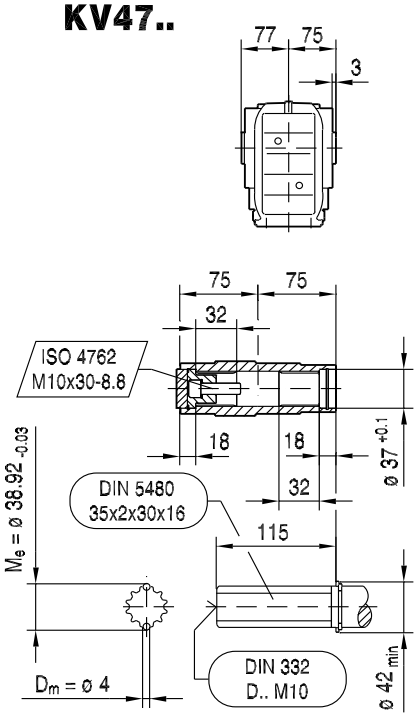

(→ 144)	CMP50S	CMP50M	CMP50L	CMP63S	CMP63M	CMP63L	CMP71S	CMP71M	CMP71L	CMP80S
AC	73	73	73	88	88	88	115	115	115	137
AD	86	86	86	92	92	92	102	102	102	134
ADS	86	86	86	92	92	92	104	104	104	137
L	382	421	460	416	466	516	409	434	484	449
LS	411	450	489	445	495	545	474	499	549	527
LB	139	178	217	173	223	273	166	191	241	206
LBS	168	207	246	202	252	302	231	256	306	284
XS	18	18	18	14	14	14	11	11	11	37

KAZ47..

33 017 00 07

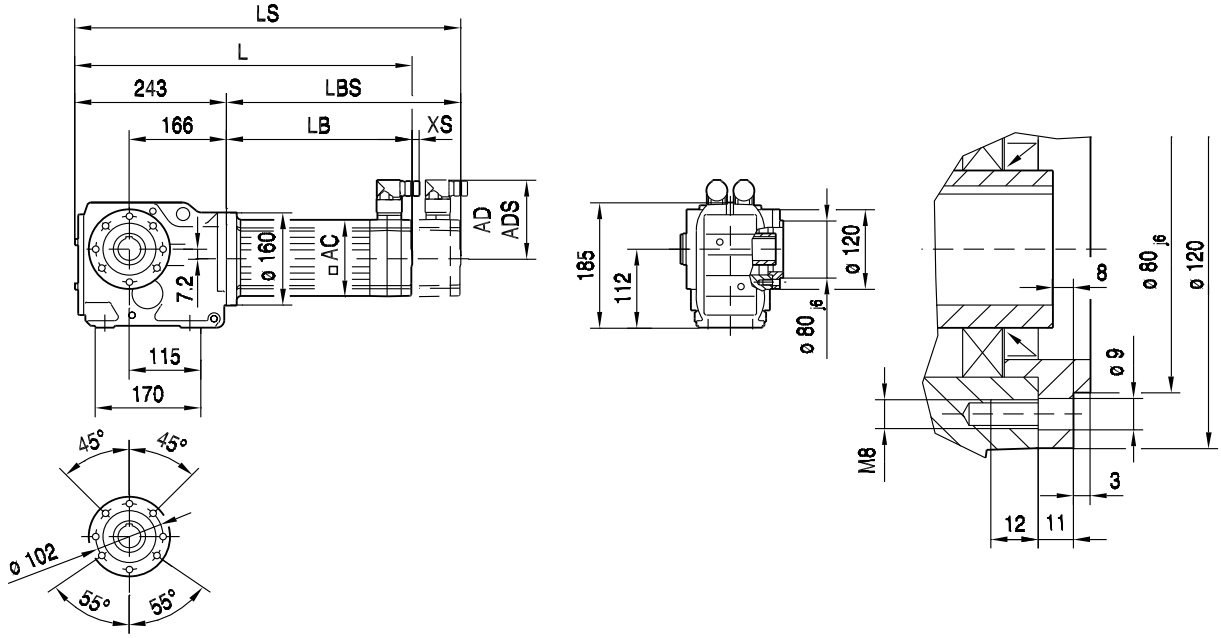

10

KAZ47..

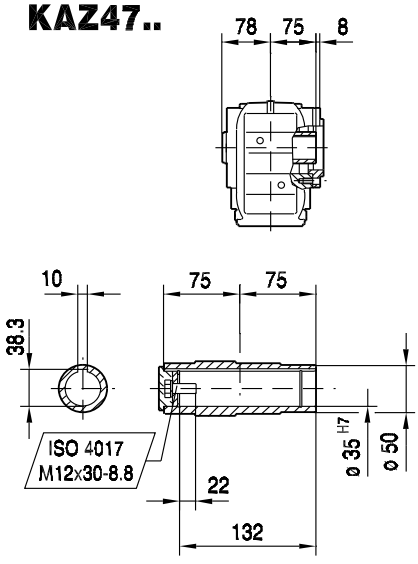

KHZ47..

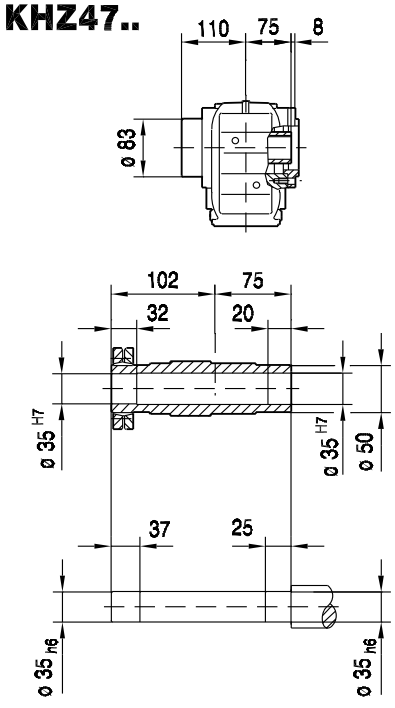

KVZ47..

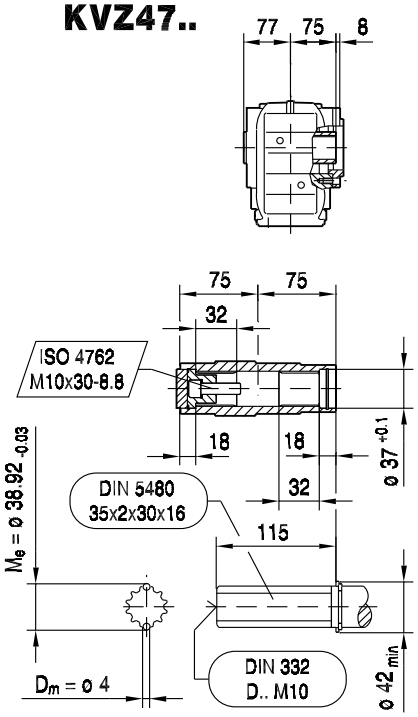

(→ 144)	CMP50S	CMP50M	CMP50L	CMP63S	CMP63M	CMP63L	CMP71S	CMP71M	CMP71L	CMP80S
AC	73	73	73	88	88	88	115	115	115	137
AD	86	86	86	92	92	92	102	102	102	134
ADS	86	86	86	92	92	92	104	104	104	137
L	382	421	460	416	466	516	409	434	484	449
LS	411	450	489	445	495	545	474	499	549	527
LB	139	178	217	173	223	273	166	191	241	206
LBS	168	207	246	202	252	302	231	256	306	284
XS	18	18	18	14	14	14	11	11	11	37

KT47..

33 018 00 07

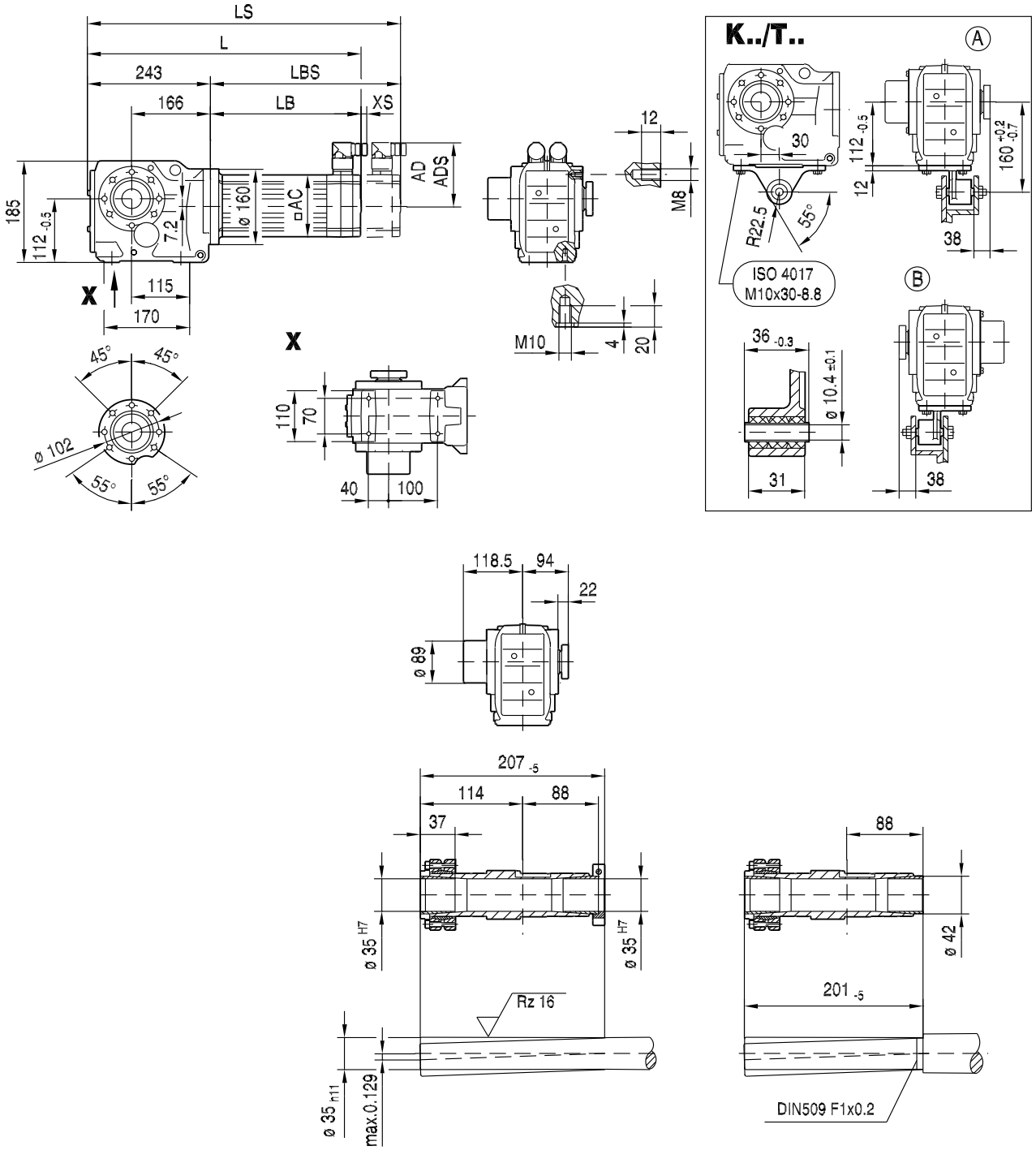

(→ 144)	CMP50S	CMP50M	CMP50L	CMP63S	CMP63M	CMP63L	CMP71S	CMP71M	CMP71L	CMP80S
AC	73	73	73	88	88	88	115	115	115	137
AD	86	86	86	92	92	92	102	102	102	134
ADS	86	86	86	92	92	92	104	104	104	137
L	382	421	460	416	466	516	409	434	484	449
LS	411	450	489	445	495	545	474	499	549	527
LB	139	178	217	173	223	273	166	191	241	206
LBS	168	207	246	202	252	302	231	256	306	284
XS	18	18	18	14	14	14	11	11	11	37

10.2.3 K 57

M_{aDyn} [Nm]		CMP											
	i	50S	50M	50L	63S	63M	63L	71S	71M	71L	80S	80M	100S
K57 3	4.69		46	69	50	96	137	86	139	210	190	280	305
	6.57		65	97	70	135	192	121	194	295	265	390	430
	7.55	38	75	112	80	155	220	139	220	335	305	450	495
	8.71	43	86	129	93	179	250	161	255	390	350	520	570
	9.59	48	95	142	102	197	275	177	280	430	385	575	>585
	11.26	56	111	166	120	230	325	205	330	505	455	>585	>585
	11.92	60	118	176	127	240	345	215	350	535	480	>585	>585
	13.25		131	196	141	270	385	240	390	595	535	>665	>665
	15.22	76	150	225	162	310	440	280	450	>665	615	>665	>665
	17.57	88	174	255	187	360	510	320	515	>665	>665	>665	>665
	19.34	97	191	285	205	395	560	355	570	>665	>665	>665	>665
	22.71	113	220	335	240	465	660	415	>665	>665	>665	>665	>665
	24.05	120	235	355	255	490	>665	440	>665	>665	>665	>665	>665
	27.34	136	270	400	290	560	>665	500	>665	>665	>665		
	30.28	151	295	445	320	620	>665	555	>665	>665	>665		
	35.70	178	350	525	380	>665	>665	655	>665				
	38.49	188	370	555	400	>665	>665	>665	>665	>665	>665	>665	>665
	44.43	215	430	640	460	>665	>665	>665	>665	>665	>665	>665	>665
	48.89	235	470	>665	510	>665	>665	>665	>665	>665	>665	>665	>665
	57.42	280	555	>665	595	>665	>665	>665	>665	>665	>665	>665	>665
	60.81	295	585	>665	630	>665	>665	>665	>665	>665	>665	>665	>665
	69.12	335	>665	>665	>665	>665	>665	>665	>665	>665	>665		
	76.56	370	>665	>665	>665	>665	>665	>665	>665	>665	>665		
	90.26	440	>665	>665	>665	>665	>665	>665	>665				
	102.88	500	>665	>665	>665	>665		>665					
	108.29	525	>665	>665	>665	>665		>665					
	123.85	595	>665		>665								
	145.14	>665											

→ 144

m [kg]		CMP											
	s	50S	50M	50L	63S	63M	63L	71S	71M	71L	80S	80M	100S
K57	3	27	28	29	29	31	32	32	34	36	39	41	47
KF: + 4.7 kg / KA: + -2.1 kg / KAF: + 3.6 kg													

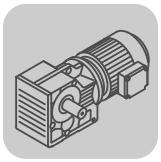

K..CMP
K..[mm]

CMP..	i	n_{epk} [1/min]	η [%]	c_{TG} K [Nm/']	KF [Nm/']	KA [Nm/']	KAF [Nm/']	φ /R [']
K57 3	4.69	4045	96	34	33	81	81	11
	6.57	4500	96	34	33	81	81	10
	7.55	4500	96	34	33	81	81	10
	8.71	4500	96	34	33	81	81	10
	9.59	4500	96	34	33	81	81	10
	11.26	4500	96	34	33	81	81	9
	11.92	4500	96	34	33	81	81	9
	13.25	4500	96	41	39	135	135	7
	15.22	4500	96	41	39	135	135	7
	17.57	4500	96	41	39	135	135	7
	19.34	4500	96	41	39	135	135	7
	22.71	4500	96	41	39	135	135	7
	24.05	4500	96	41	39	135	135	7
	27.34	4500	96	41	39	135	135	7
	30.28	4500	96	41	39	135	135	7
	35.70	4500	96	41	39	135	135	7
	38.49	4500	94	43	40	150	150	6
	44.43	4500	94	43	40	150	150	6
	48.89	4500	94	43	40	150	150	6
	57.42	4500	94	43	40	150	150	6
	60.81	4500	94	43	40	150	150	6
	69.12	4500	94	43	40	150	150	6
	76.56	4500	94	43	40	150	150	6
	90.26	4500	94	43	40	150	150	6
	102.88	4500	94	43	40	150	150	6
	108.29	4500	94	43	40	150	150	6
	123.85	4500	93	43	40	150	150	6
	145.14	4500	93	43	40	150	150	6

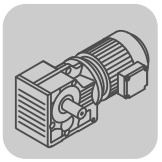

CMP..							F_{Ramax}				F_{Rapk}			
n_e = 1400	i	M_{amax} [Nm]	M_{apk} [Nm]	$M_{aNotaus}$ [Nm]	n_{ak} [1/min]	J_G 10^{-4} [kgm^2]	K [N]	KF [N]	KA [N]	KAF [N]	K [N]	KF [N]	KA [N]	KAF [N]
K57 3	4.69	300	450	510	320	9.0	3800	3980	2580	2580	8520	8520	11500	11500
	6.57	345	517	587	244	5.6	4180	4400	2800	2800	7990	8110	11500	11500
	7.55	365	547	621	225	4.4	4360	4580	2900	2900	7740	7920	11500	11500
	8.71	390	585	663	195	3.5	4520	4760	2980	2980	7420	7660	11500	11500
	9.59	405	585	689	177	3.0	4650	4900	3050	3050	7420	7660	11500	11500
	11.26	415	585	706	178	2.3	4990	5250	3340	3340	7420	7660	11500	11500
	11.92	415	585	706	176	2.1	5150	5400	3470	3470	7420	7660	11500	11500
	13.25	510	665	867	226	4.8	5190	5350	3240	3240	4700	4700	11500	11500
	15.22	535	665	910	197	3.8	5430	5600	3390	3390	4700	4700	11500	11500
	17.57	555	665	944	171	3.0	5740	5910	3610	3610	4700	4700	11500	11500
	19.34	575	665	978	155	2.6	5910	6080	3710	3710	4700	4700	11500	11500
	22.71	600	665	1020	132	2.0	6280	6460	3970	3970	4700	4700	11500	11500
	24.05	600	665	1020	133	1.9	6480	6650	4140	4140	4700	4700	11500	11500
	27.34	600	665	1020	132	1.5	6930	7090	4550	4550	4700	4700	11500	11500
	30.28	600	665	1020	132	1.2	7300	7460	4880	4880	4700	4700	11500	11500
	35.70	600	665	1020	134	0.95	7630	7720	5440	5440	4700	4700	11500	11500
	38.49	600	665	1020	70	2.3	7630	7720	5710	5710	4700	4700	11500	11500
	44.43	600	665	1020	72	1.9	7630	7720	6240	6240	4700	4700	11500	11500
	48.89	600	665	1020	74	1.6	7630	7720	6610	6610	4700	4700	11500	11500
	57.42	600	665	1020	75	1.3	7630	7720	7260	7260	4700	4700	11500	11500
	60.81	600	665	1020	76	1.2	7630	7720	7490	7490	4700	4700	11500	11500
	69.12	600	665	1020	77	0.98	7630	7720	8040	8040	4700	4700	11500	11500
	76.56	600	665	1020	78	0.85	7630	7720	8500	8500	4700	4700	11500	11500
	90.26	600	665	1020	78	0.67	7630	7720	9260	9260	4700	4700	11500	11500
	102.88	600	665	1020	68	0.46	7630	7720	9900	9900	4700	4700	11500	11500
	108.29	600	665	1020	65	0.41	7630	7720	10200	10200	4700	4700	11500	11500
	123.85	600	665	1020	57	0.33	7630	7720	10900	10900	4700	4700	11500	11500
	145.14	600	665	1020	48	0.27	7630	7720	11500	11500	4700	4700	11500	11500

33 019 00 07

K57..

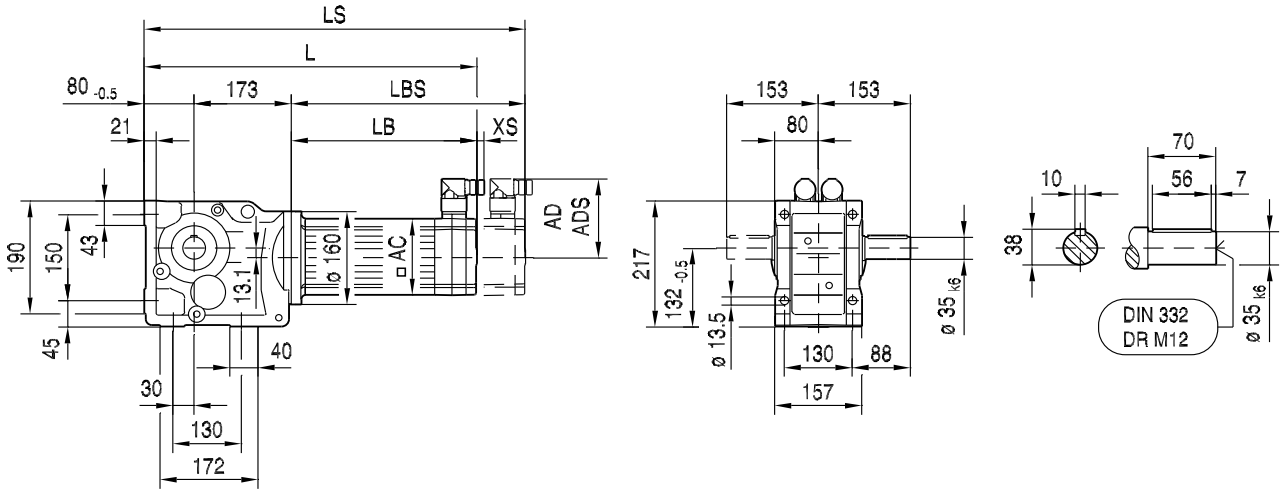

KA57B..

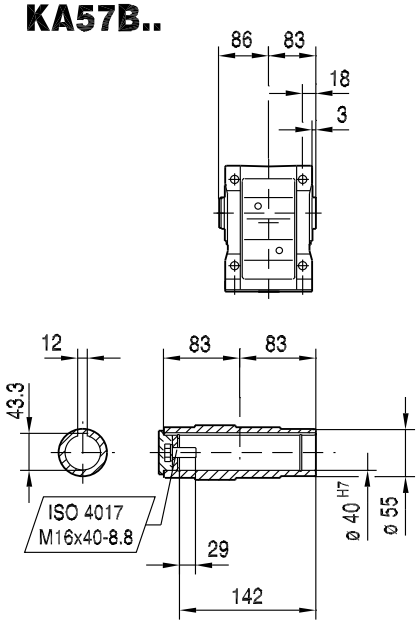

KH57B..

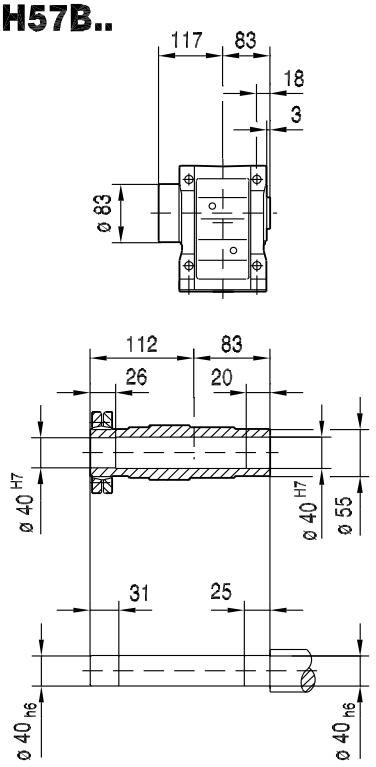

KV57B..

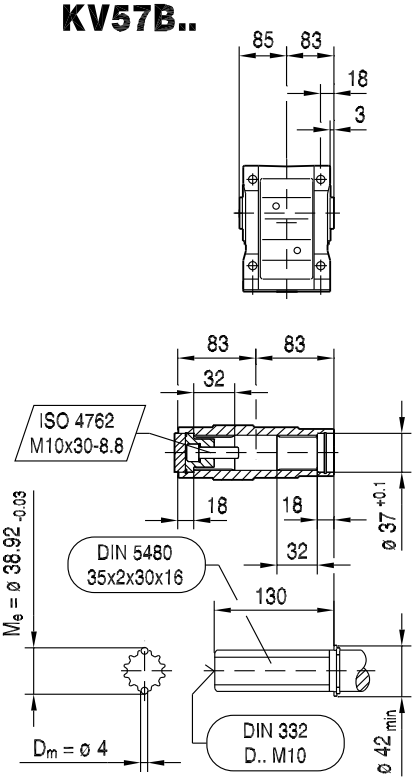

(→ 144)	CMP50M	CMP50L	CMP63S	CMP63M	CMP63L	CMP71S	CMP71M	CMP71L	CMP80S	CMP80M	CMP100S
AC	73	73	88	88	88	115	115	115	137	137	162
AD	86	86	92	92	92	102	102	102	134	134	146
ADS	86	86	92	92	92	104	104	104	137	137	147
L	431	470	426	476	526	419	444	494	459	497	495
LS	460	499	455	505	555	484	509	559	537	575	591
LB	178	217	173	223	273	166	191	241	206	244	242
LBS	207	246	202	252	302	231	256	306	284	322	338
XS	18	18	14	14	14	11	11	11	37	37	37

33 020 00 07

KF57..

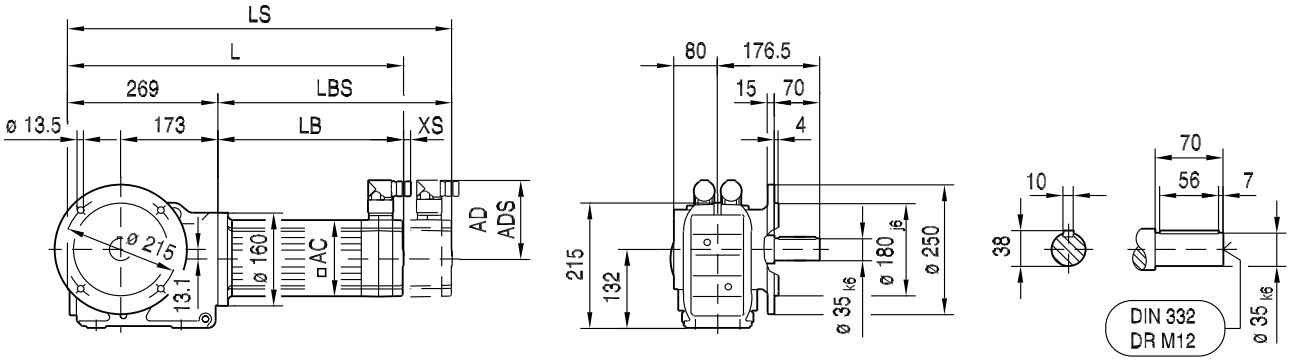

10

KAF57..

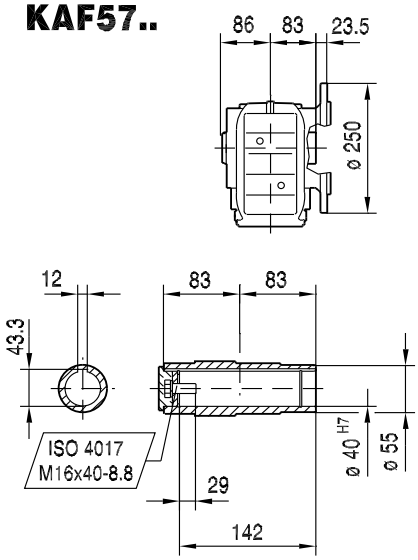

KHF57..

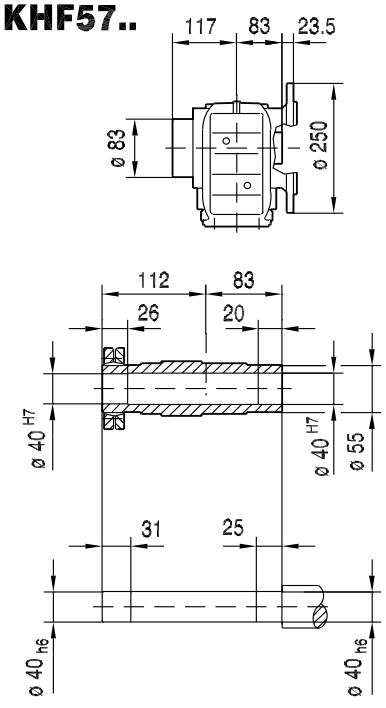

KVF57..

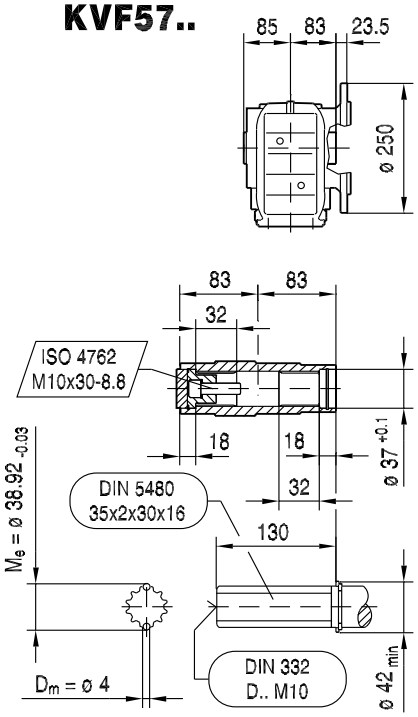

(→ 144)	CMP50M	CMP50L	CMP63S	CMP63M	CMP63L	CMP71S	CMP71M	CMP71L	CMP80S	CMP80M	CMP100S
AC	73	73	88	88	88	115	115	115	137	137	162
AD	86	86	92	92	92	102	102	102	134	134	146
ADS	86	86	92	92	92	104	104	104	137	137	147
L	447	486	442	492	542	435	460	510	475	513	511
LS	476	515	471	521	571	500	525	575	553	591	607
LB	178	217	173	223	273	166	191	241	206	244	242
LBS	207	246	202	252	302	231	256	306	284	322	338
XS	18	18	14	14	14	11	11	11	37	37	37

KA57..

33 021 00 07

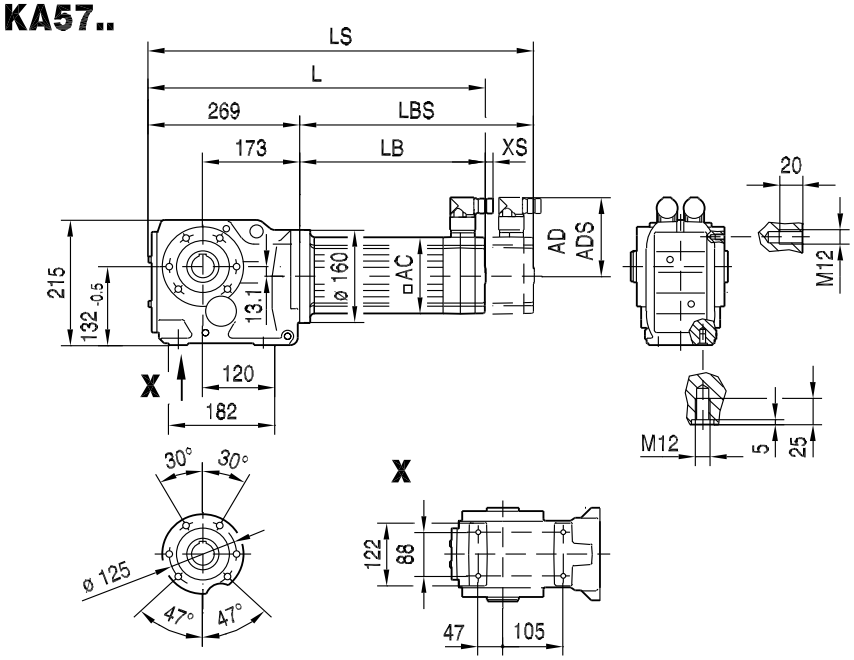

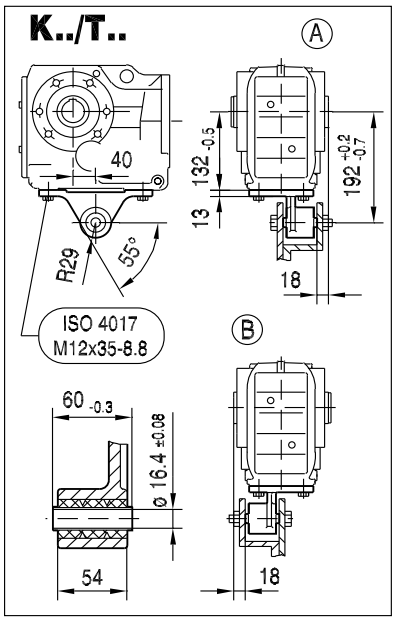

KA57..

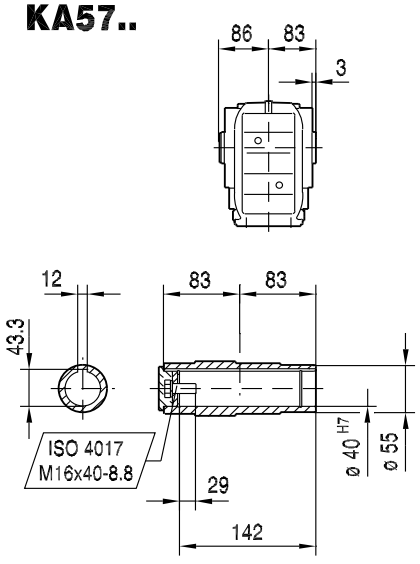

KH57..

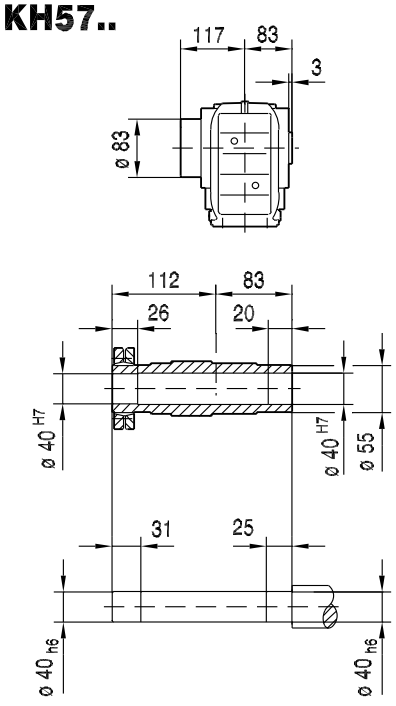

KV57..

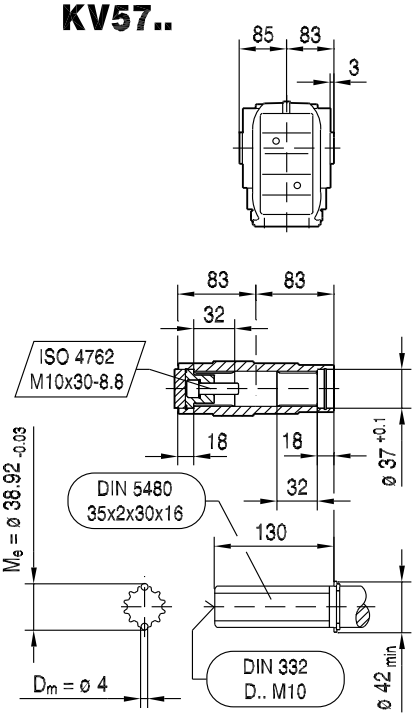

(→ 📖 144)	CMP50M	CMP50L	CMP63S	CMP63M	CMP63L	CMP71S	CMP71M	CMP71L	CMP80S	CMP80M	CMP100S
AC	73	73	88	88	88	115	115	115	137	137	162
AD	86	86	92	92	92	102	102	102	134	134	146
ADS	86	86	92	92	92	104	104	104	137	137	147
L	447	486	442	492	542	435	460	510	475	513	511
LS	476	515	471	521	571	500	525	575	553	591	607
LB	178	217	173	223	273	166	191	241	206	244	242
LBS	207	246	202	252	302	231	256	306	284	322	338
XS	18	18	14	14	14	11	11	11	37	37	37

KAZ57..

33 022 00 07

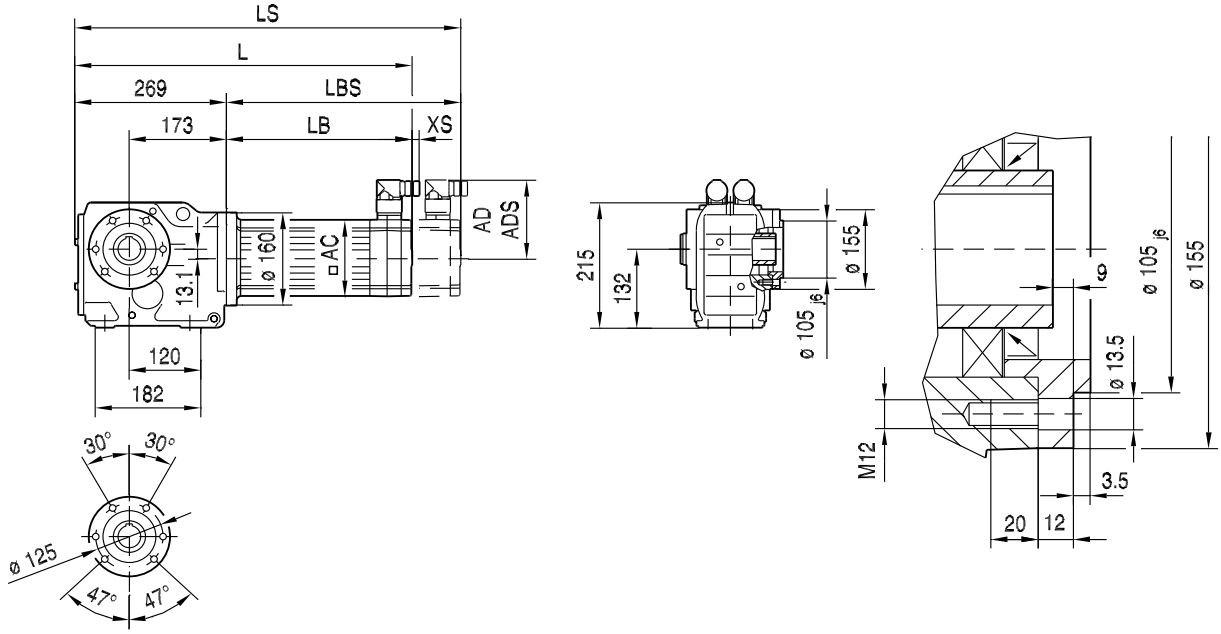

10

KAZ57..

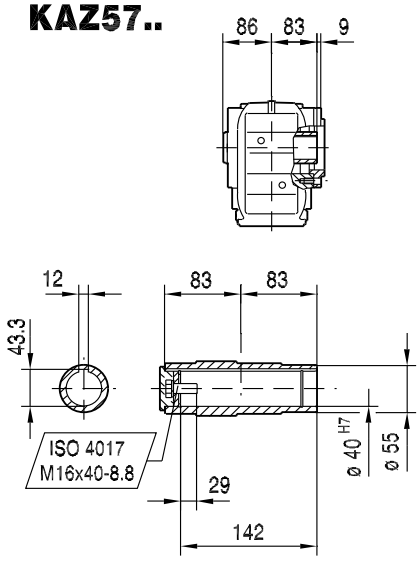

KHZ57..

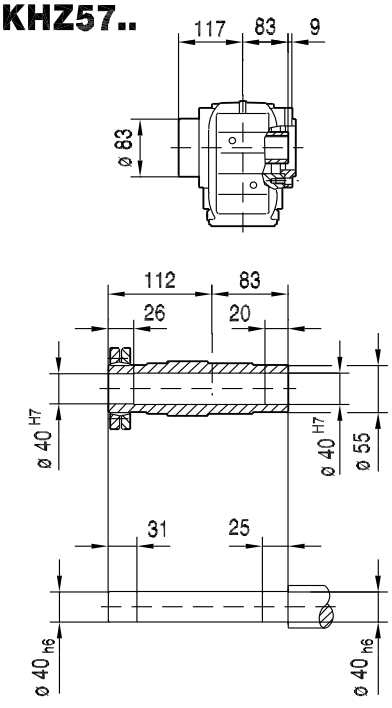

KVZ57..

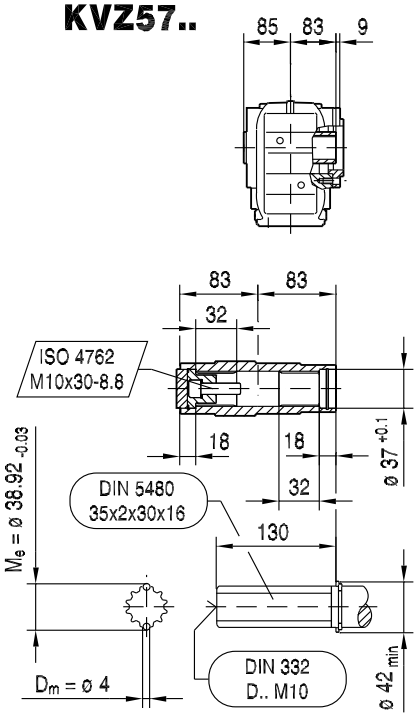

(→ 144)	CMP50M	CMP50L	CMP63S	CMP63M	CMP63L	CMP71S	CMP71M	CMP71L	CMP80S	CMP80M	CMP100S
AC	73	73	88	88	88	115	115	115	137	137	162
AD	86	86	92	92	92	102	102	102	134	134	146
ADS	86	86	92	92	92	104	104	104	137	137	147
L	447	486	442	492	542	435	460	510	475	513	511
LS	476	515	471	521	571	500	525	575	553	591	607
LB	178	217	173	223	273	166	191	241	206	244	242
LBS	207	246	202	252	302	231	256	306	284	322	338
XS	18	18	14	14	14	11	11	11	37	37	37

KT57..

33 023 00 07

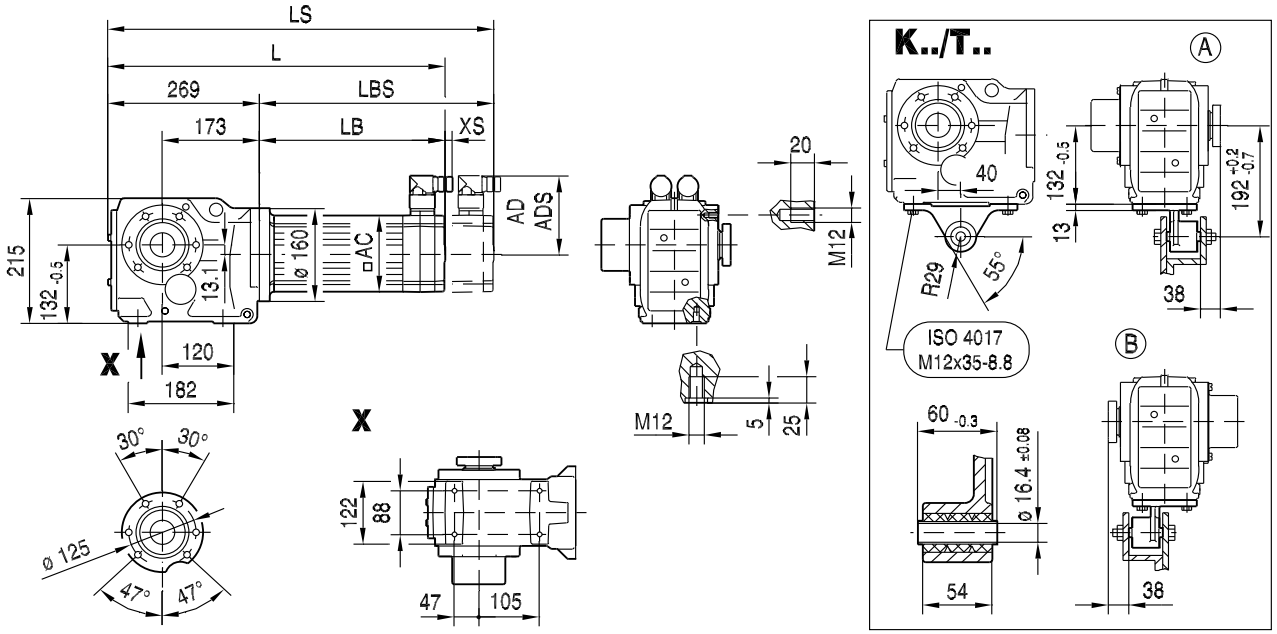

(→ 144)	CMP50M	CMP50L	CMP63S	CMP63M	CMP63L	CMP71S	CMP71M	CMP71L	CMP80S	CMP80M	CMP100S
AC	73	73	88	88	88	115	115	115	137	137	162
AD	86	86	92	92	92	102	102	102	134	134	146
ADS	86	86	92	92	92	104	104	104	137	137	147
L	447	486	442	492	542	435	460	510	475	513	511
LS	476	515	471	521	571	500	525	575	553	591	607
LB	178	217	173	223	273	166	191	241	206	244	242
LBS	207	246	202	252	302	231	256	306	284	322	338
XS	18	18	14	14	14	11	11	11	37	37	37

10.2.4 K 67

M_{aDyn} [Nm]		CMP														
	i	50S	50M	50L	63S	63M	63L	71S	71M	71L	80S	80M	80L	100S	100M	100L
	5.20		51	77	55	107	152	96	154	230	210	310		340		
	7.28		72	108	78	150	210	134	215	325	290	435	>630	475	>630	>630
	8.37	42	83	124	89	172	240	154	245	375	335	500	>660	545	>660	>660
	9.66	48	96	143	103	198	280	178	285	430	390	580	>685	630	>685	>685
	10.63	53	105	157	113	215	310	196	310	475	425	635		>690		
	12.48	62	123	185	133	255	360	230	365	560	500	>695		>695		
	13.22		131	195	141	270	385	240	390	595	530	790	>920	860	>920	>920
	15.19	76	150	220	162	310	440	275	445	680	610	910	>920	>920	>920	>920
	17.54	88	173	255	187	360	510	320	515	785	705	>920	>920	>920	>920	>920
	19.30	96	191	285	205	395	560	355	570	860	780	>920		>920		
	22.66	113	220	335	240	465	660	415	670	>920	910	>920		>920		
	24.00	120	235	350	255	490	700	440	705	>920	>920	>920		>920		
K67	27.28	136	265	400	290	560	795	500	800	>920	>920					
3	30.22	151	295	445	320	620	880	555	890	>920	>920					
	35.62	178	350	525	375	730	>920	655	>920							
	38.39	188	370	555	400	770	>920	690	>920	>920	>920	>920	>920	>920	>920	>920
	44.32	215	425	640	460	890	>920	795	>920	>920	>920	>920	>920	>920	>920	>920
	48.77	235	470	705	505	>920	>920	880	>920	>920	>920	>920		>920		
	57.28	275	550	820	595	>920	>920	>920	>920	>920	>920	>920		>920		
	60.66	295	585	870	630	>920	>920	>920	>920	>920	>920	>920		>920		
	68.95	340	670	>920	725	>920	>920	>920	>920	>920	>920					
	76.37	375	745	>920	800	>920	>920	>920	>920	>920	>920					
	90.04	440	870	>920	>920	>920	>920	>920	>920							
	102.62	500	>920	>920	>920	>920		>920								
	108.03	525	>920	>920	>920	>920		>920								
	123.54	600	>920		>920											
	144.79	705														

→ 144

m [kg]		CMP														
	s	50S	50M	50L	63S	63M	63L	71S	71M	71L	80S	80M	80L	100S	100M	100L
K67	3	33	34	35	35	37	38	38	40	42	45	47	51	53	57	66
KF: + 5.6 kg / KA: + -2.7 kg / KAF: + 3.0 kg																

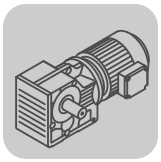

K..CMP
K..[mm]

CMP..	i	n_{epk} [1/min]	η [%]	c_{TG} K [Nm/']	KF [Nm/']	KA [Nm/']	KAF [Nm/']	φ /R [']
K67 3	5.20	3862	96	58	54	96	96	10
	7.28	4500	96	58	54	96	96	9
	8.37	4500	96	58	54	96	96	9
	9.66	4500	96	58	54	96	96	9
	10.63	4500	96	58	54	96	96	9
	12.48	4500	96	58	54	96	96	9
	13.22	4500	96	73	66	146	146	8
	15.19	4500	96	73	66	146	146	8
	17.54	4500	96	73	66	146	146	7
	19.30	4500	96	73	66	146	146	7
	22.66	4500	96	73	66	146	146	7
	24.00	4500	96	73	66	146	146	7
	27.28	4500	96	73	66	146	146	7
	30.22	4500	96	73	66	146	146	7
	35.62	4500	96	73	66	146	146	7
	38.39	4500	94	77	70	165	165	6
	44.32	4500	94	77	70	165	165	6
	48.77	4500	94	77	70	165	165	6
	57.28	4500	94	77	70	165	165	6
	60.66	4500	94	77	70	165	165	6
	68.95	4500	95	77	70	165	165	6
	76.37	4500	95	77	70	165	165	6
	90.04	4500	94	77	70	165	165	6
	102.62	4500	94	77	70	165	165	6
	108.03	4500	94	77	70	165	165	6
	123.54	4500	94	77	70	165	165	6
	144.79	4500	94	77	70	165	165	6

CMP..							F_{Ramax}				F_{Rapk}			
n_e = 1400	i	M_{amax} [Nm]	M_{apk} [Nm]	$M_{aNotaus}$ [Nm]	n_{ak} [1/min]	J_G 10^{-4} [kgm^2]	K [N]	KF [N]	KA [N]	KAF [N]	K [N]	KF [N]	KA [N]	KAF [N]
K67 3	5.20	350	525	595	192	11	9860	10000	2450	2450	12300	12300	13000	13000
	7.28	420	630	714	206	6.3	10700	10900	2480	2480	11700	11700	13000	13000
	8.37	440	660	748	179	4.9	11100	11400	2590	2590	11500	11500	13000	13000
	9.66	480	685	816	155	3.8	11500	11700	2550	2550	11400	11400	13000	13000
	10.63	500	690	850	141	3.2	11800	12000	2590	2590	11300	11300	13000	13000
	12.48	530	695	901	120	2.5	12300	12300	2710	2710	11300	11300	13000	13000
	13.22	670	920	1139	113	5.6	11500	11500	2420	2420	9310	9310	13000	13000
	15.19	700	920	1190	105	4.4	11300	11300	2550	2550	9310	9310	13000	13000
	17.54	740	920	1258	97	3.4	11000	11000	2630	2630	9310	9310	13000	13000
	19.30	760	920	1292	93	2.9	10800	10800	2740	2740	9310	9310	13000	13000
	22.66	780	920	1326	93	2.2	10700	10700	3070	3070	9310	9310	13000	13000
	24.00	800	920	1360	88	2.0	10500	10500	3090	3090	9310	9310	13000	13000
	27.28	820	920	1394	84	1.6	10300	10300	3340	3340	9310	9310	13000	13000
	30.22	820	920	1394	86	1.3	10300	10300	3680	3680	9310	9310	13000	13000
	35.62	820	920	1394	90	1.0	10300	10300	4260	4260	9310	9310	13000	13000
	38.39	800	920	1360	52	2.4	10500	10500	4690	4690	9310	9310	13000	13000
	44.32	820	920	1394	50	1.9	10300	10300	5070	5070	9310	9310	13000	13000
	48.77	820	920	1394	49	1.7	10300	10300	5440	5440	9310	9310	13000	13000
	57.28	820	920	1394	52	1.4	10300	10300	6100	6100	9310	9310	13000	13000
	60.66	820	920	1394	53	1.2	10300	10300	6340	6340	9310	9310	13000	13000
	68.95	820	920	1394	52	1.0	10300	10300	6900	6900	9310	9310	13000	13000
	76.37	820	920	1394	54	0.87	10300	10300	7360	7360	9310	9310	13000	13000
	90.04	820	920	1394	54	0.68	10300	10300	8140	8140	9310	9310	13000	13000
	102.62	820	920	1394	56	0.47	10300	10300	8800	8800	9310	9310	13000	13000
	108.03	820	920	1394	56	0.42	10300	10300	9060	9060	9310	9310	13000	13000
	123.54	820	920	1394	56	0.34	10300	10300	9770	9770	9310	9310	13000	13000
	144.79	820	920	1394	48	0.28	10300	10300	10700	10700	9310	9310	13000	13000

33 024 00 07

K67..

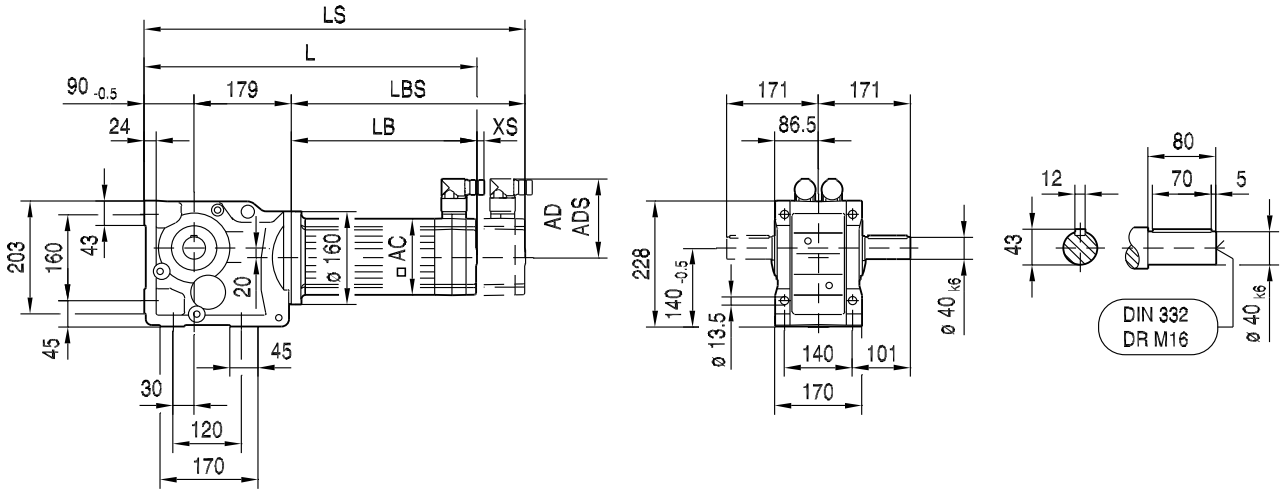

KA67B..

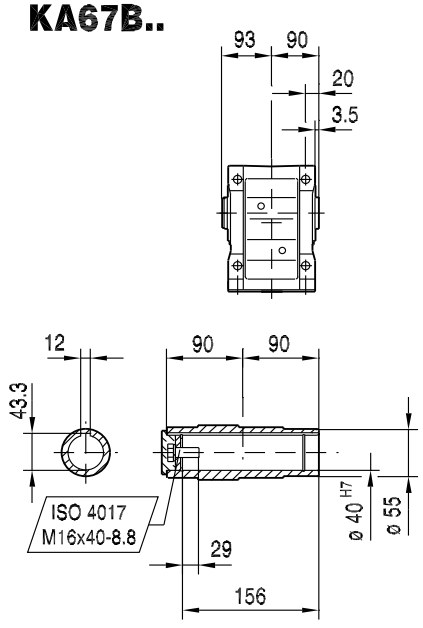

KH67B..

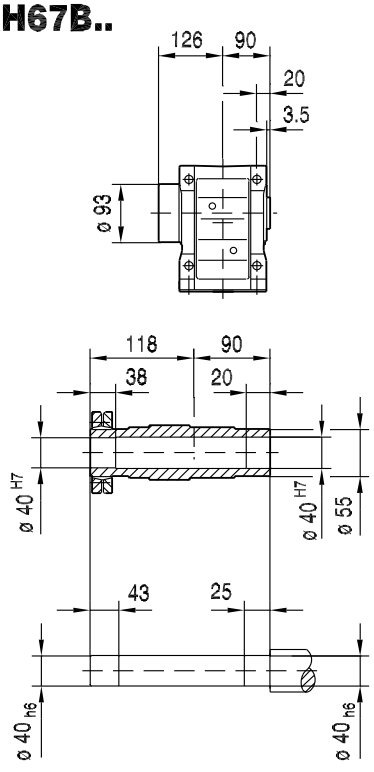

KV67B..

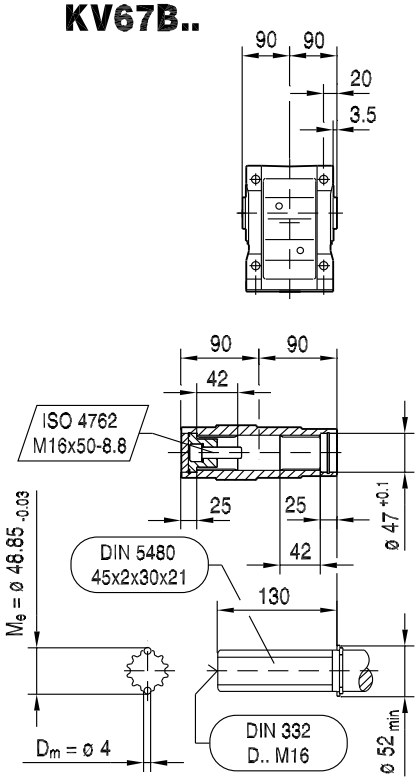

(→ 📖 144)	CMP63M	CMP63L	CMP71S	CMP71M	CMP71L	CMP80S	CMP80M	CMP80L	CMP100S	CMP100M	CMP100L
AC	88	88	115	115	115	137	137	137	162	162	162
AD	92	92	102	102	102	134	134	134	146	146	146
ADS	92	92	104	104	104	137	137	137	147	147	147
L	492	542	435	460	510	475	513	577	511	548	628
LS	521	571	500	525	575	553	591	655	607	644	724
LB	223	273	166	191	241	206	244	308	242	279	359
LBS	252	302	231	256	306	284	322	386	338	375	455
XS	14	14	11	11	11	37	37	37	37	37	37

33 025 00 07

KF67..

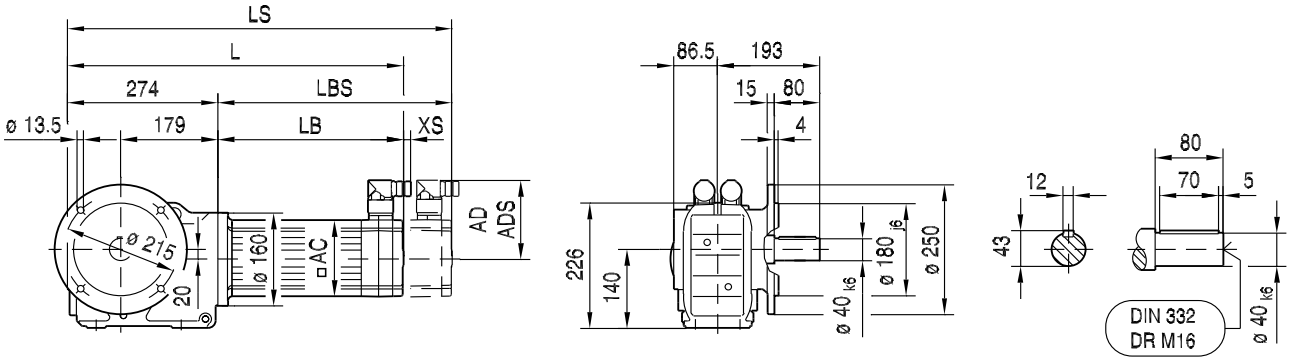

KAF67..

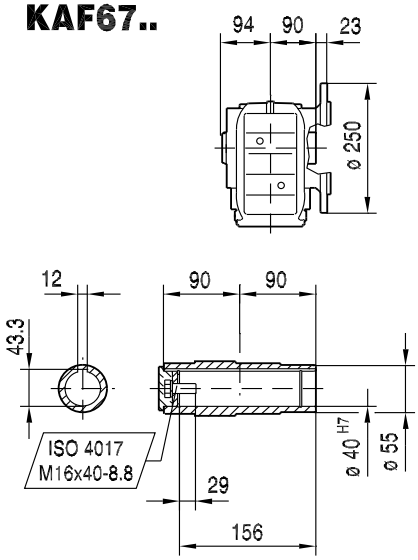

KHF67..

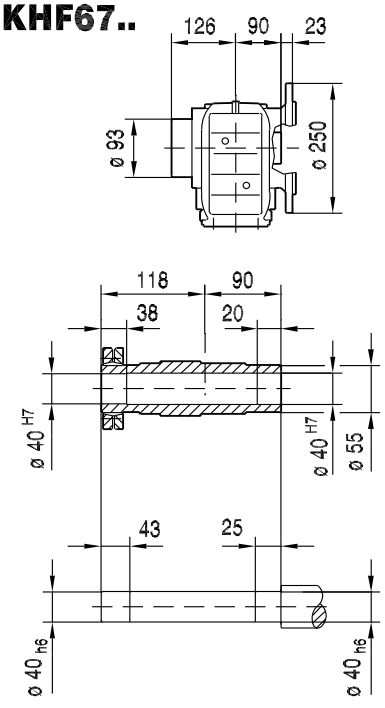

KVF67..

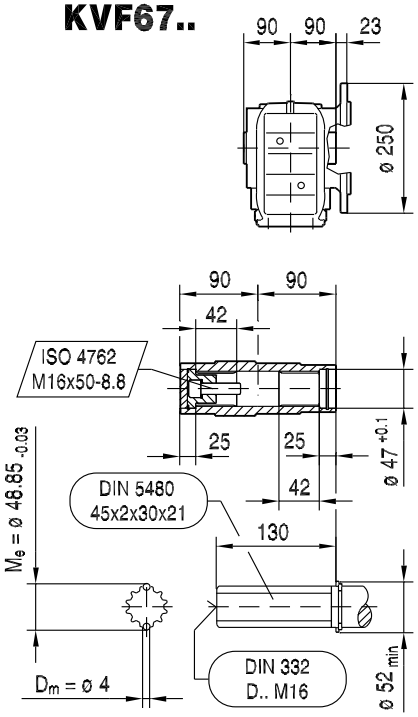

(→ 144)	CMP63M	CMP63L	CMP71S	CMP71M	CMP71L	CMP80S	CMP80M	CMP80L	CMP100S	CMP100M	CMP100L
AC	88	88	115	115	115	137	137	137	162	162	162
AD	92	92	102	102	102	134	134	134	146	146	146
ADS	92	92	104	104	104	137	137	137	147	147	147
L	497	547	440	465	515	480	518	582	516	553	633
LS	526	576	505	530	580	558	596	660	612	649	729
LB	223	273	166	191	241	206	244	308	242	279	359
LBS	252	302	231	256	306	284	322	386	338	375	455
XS	14	14	11	11	11	37	37	37	37	37	37

KA67..

33 026 00 07

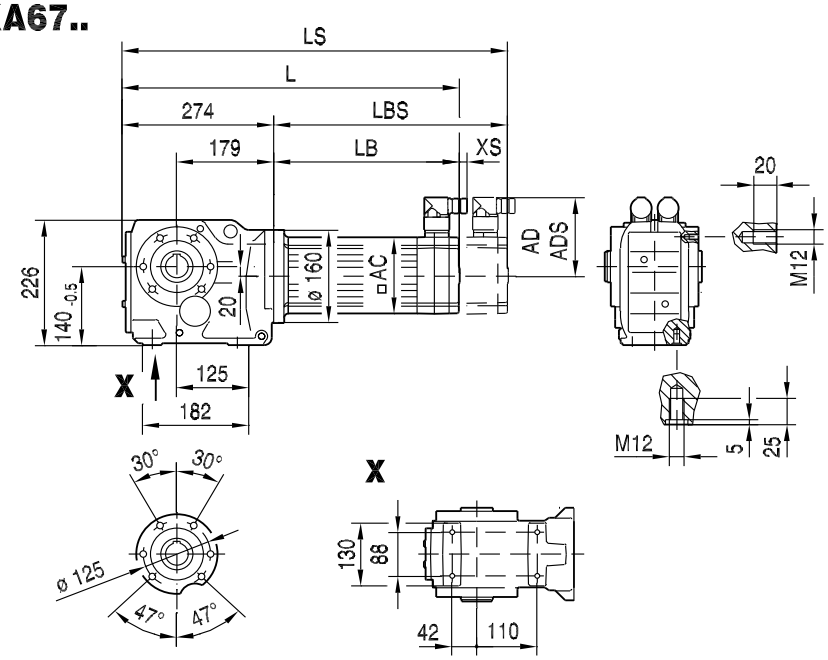

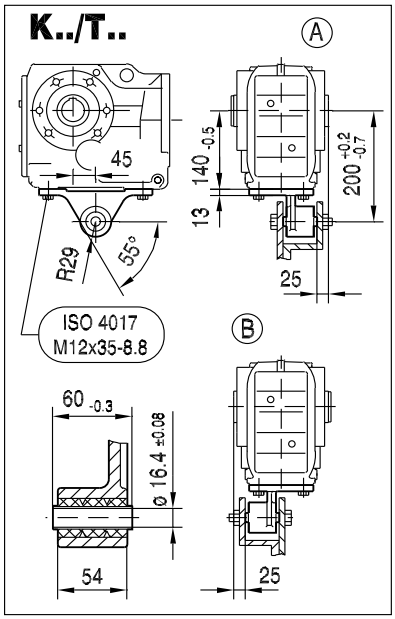

10

KA67..

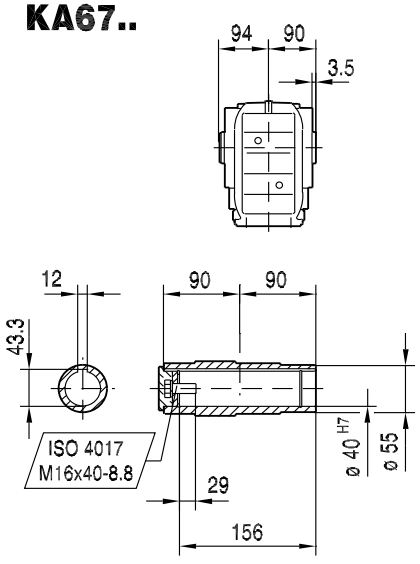

KH67..

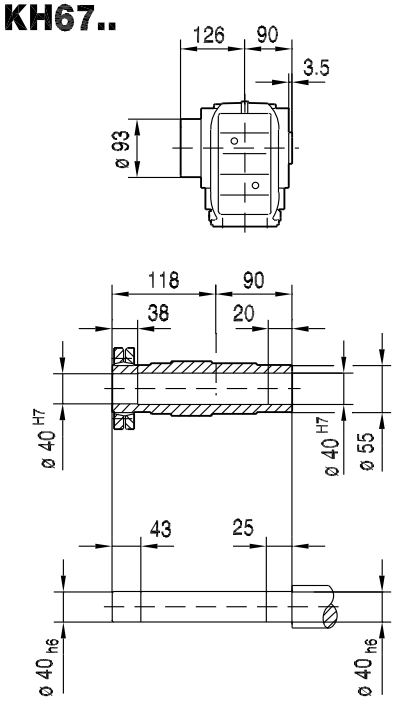

KV67..

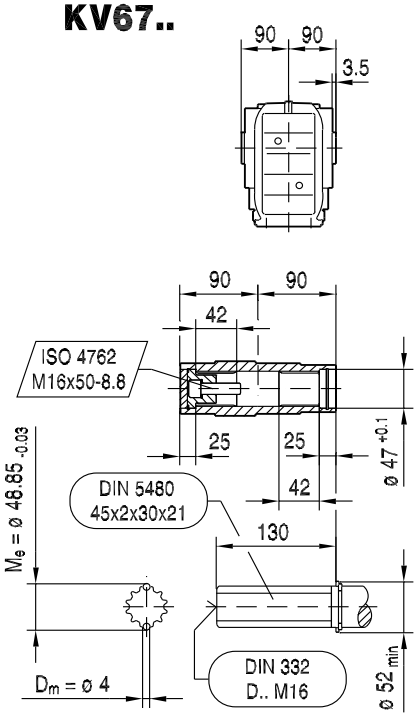

(→ 📖 144)	CMP63M	CMP63L	CMP71S	CMP71M	CMP71L	CMP80S	CMP80M	CMP80L	CMP100S	CMP100M	CMP100L
AC	88	88	115	115	115	137	137	137	162	162	162
AD	92	92	102	102	102	134	134	134	146	146	146
ADS	92	92	104	104	104	137	137	137	147	147	147
L	497	547	440	465	515	480	518	582	516	553	633
LS	526	576	505	530	580	558	596	660	612	649	729
LB	223	273	166	191	241	206	244	308	242	279	359
LBS	252	302	231	256	306	284	322	386	338	375	455
XS	14	14	11	11	11	37	37	37	37	37	37

KAZ67..

33 027 00 07

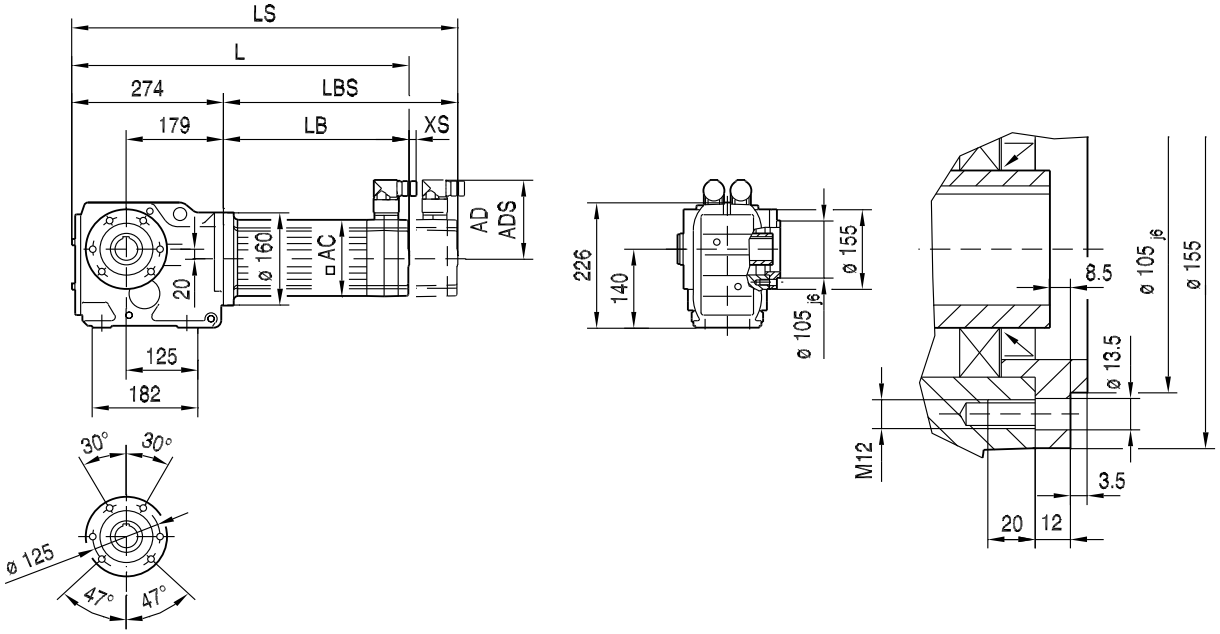

KAZ67..

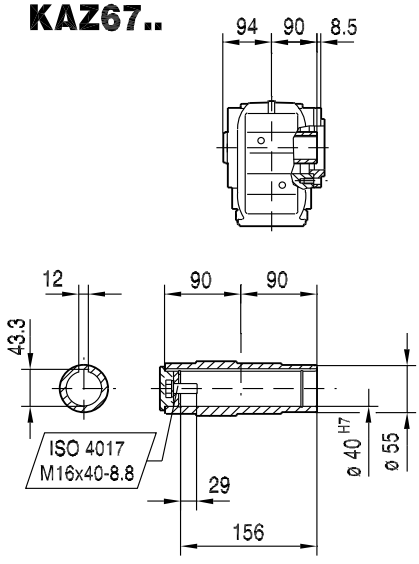

KHZ67..

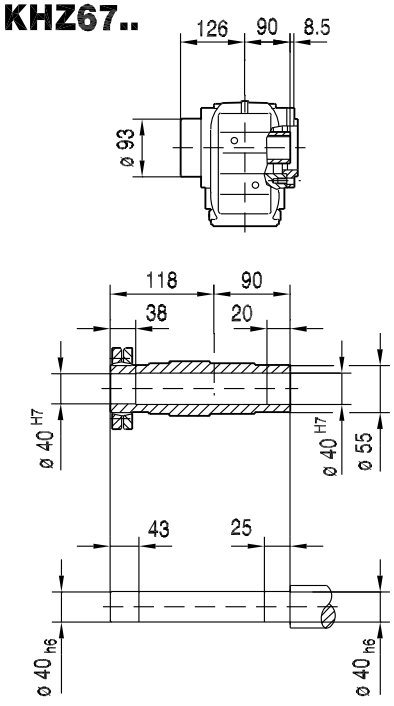

KVZ67..

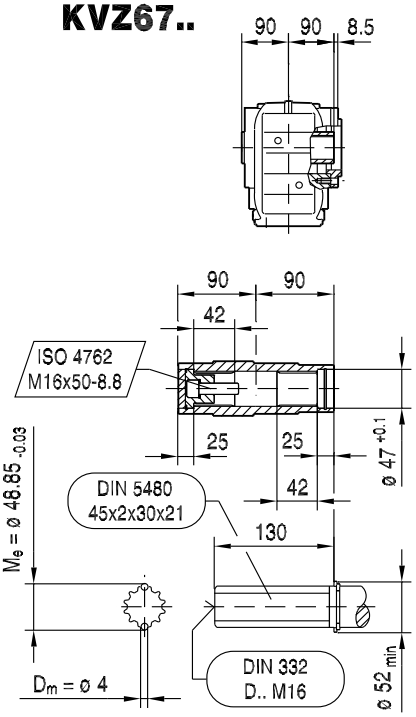

(→ 📖 144)	CMP63M	CMP63L	CMP71S	CMP71M	CMP71L	CMP80S	CMP80M	CMP80L	CMP100S	CMP100M	CMP100L
AC	88	88	115	115	115	137	137	137	162	162	162
AD	92	92	102	102	102	134	134	134	146	146	146
ADS	92	92	104	104	104	137	137	137	147	147	147
L	497	547	440	465	515	480	518	582	516	553	633
LS	526	576	505	530	580	558	596	660	612	649	729
LB	223	273	166	191	241	206	244	308	242	279	359
LBS	252	302	231	256	306	284	322	386	338	375	455
XS	14	14	11	11	11	37	37	37	37	37	37

KT67..

33 028 00 07

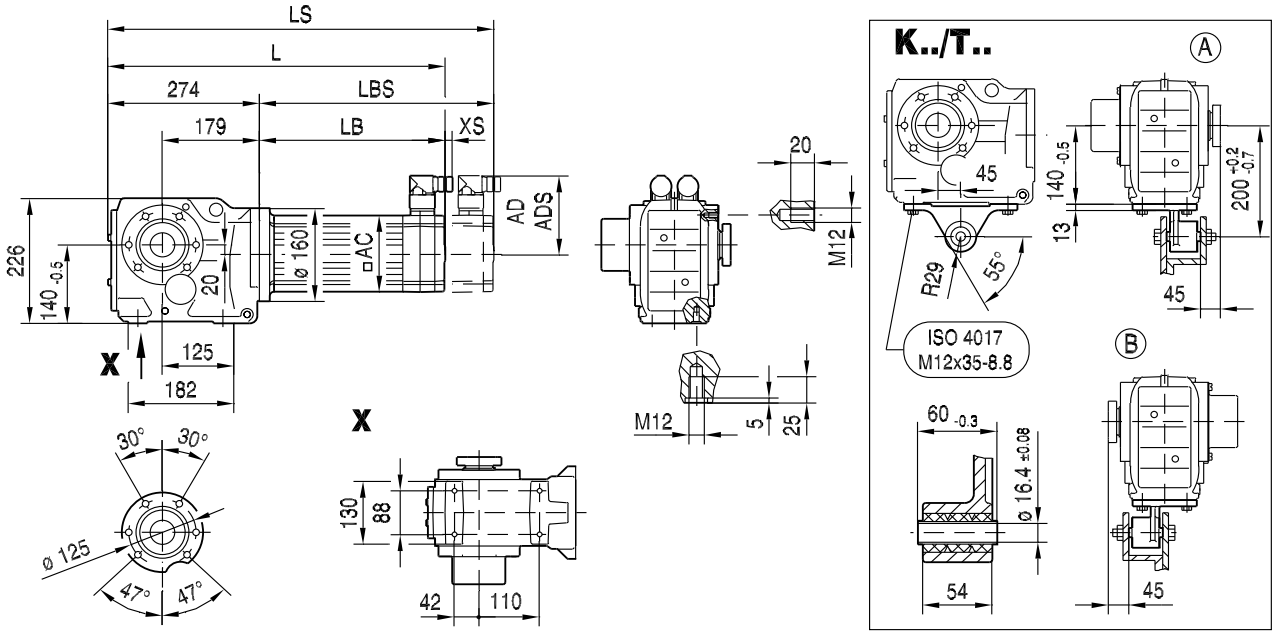

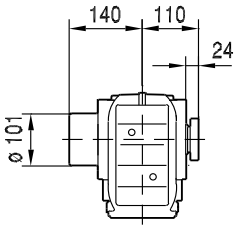

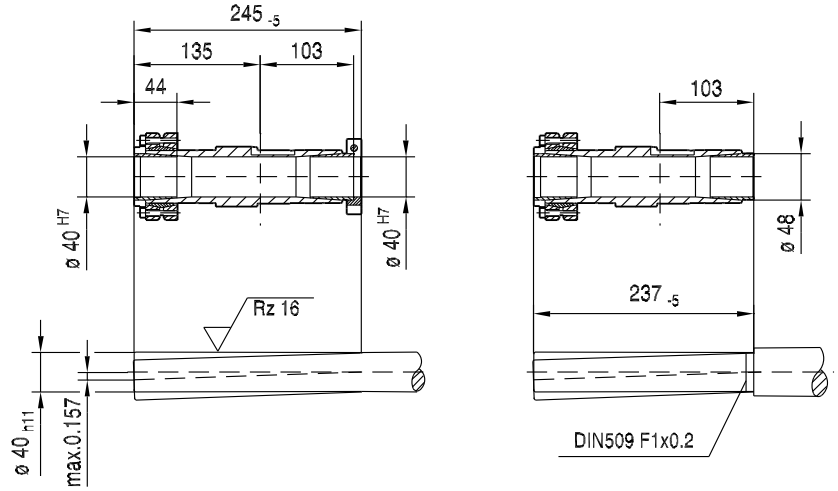

(→ 144)	CMP63M	CMP63L	CMP71S	CMP71M	CMP71L	CMP80S	CMP80M	CMP80L	CMP100S	CMP100M	CMP100L
AC	88	88	115	115	115	137	137	137	162	162	162
AD	92	92	102	102	102	134	134	134	146	146	146
ADS	92	92	104	104	104	137	137	137	147	147	147
L	497	547	440	465	515	480	518	582	516	553	633
LS	526	576	505	530	580	558	596	660	612	649	729
LB	223	273	166	191	241	206	244	308	242	279	359
LBS	252	302	231	256	306	284	322	386	338	375	455
XS	14	14	11	11	11	37	37	37	37	37	37

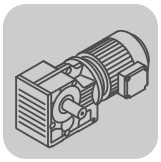

10.2.5 K 77

M_{aDyn} [Nm]		CMP											
	i	63S	63M	63L	71S	71M	71L	80S	80M	80L	100S	100M	100L
K77 3	7.24	77	149	210	133	210	325	290	435	740	470	750	>1150
	8.48	90	174	245	156	250	380	340	505	870	555	870	>1160
	9.56	102	196	275	176	280	430	385	570	980	625	990	>1160
	10.84	116	220	315	200	320	485	435	650	1110	710	1120	>1170
	12.36	132	250	360	225	365	555	495	740	>1170	810	>1170	>1170
	13.52	144	275	390	245	395	605	545	810	1380	880	1400	>1550
	15.84	169	325	460	290	465	710	640	950	>1550	1030	>1550	>1550
	17.87	190	365	520	325	525	800	720	1070	>1550	1170	>1550	>1550
	20.25	215	415	590	370	595	910	810	1210	>1550	1320	>1550	>1550
	23.08	245	470	670	425	680	1030	930	1380	>1550	1510	>1550	>1550
	25.62	270	525	745	470	755	1150	1030	1530		>1550		
	29.27	310	600	850	535	860	1310	1180	>1550		>1550		
	30.89	325	630	900	565	910	1390	1240	>1550		>1550		
	35.20	375	720	1020	645	1040	>1550	1420					
	38.39	405	785	1120	705	1130	>1550	>1550					
	40.04	420	810	1150	730	1170	>1550	>1550	>1550	>1550	>1550	>1550	>1550
	45.16	475	910	1300	820	1320	>1550	>1550	>1550	>1550	>1550	>1550	>1550
	51.18	535	1040	1470	930	1490	>1550	>1550	>1550	>1550	>1550	>1550	>1550
	58.34	615	1180	>1550	1060	>1550	>1550	>1550	>1550	>1550	>1550	>1550	>1550
	64.75	680	1310	>1550	1180	>1550	>1550	>1550	>1550		>1550		
	73.99	780	1500	>1550	1340	>1550	>1550	>1550	>1550		>1550		
	78.07	820	>1550	>1550	1420	>1550	>1550	>1550	>1550		>1550		
	88.97	930	>1550	>1550	>1550	>1550	>1550	>1550					
	97.05	1020	>1550	>1550	>1550	>1550	>1550	>1550					
	113.56	1180	>1550	>1550	>1550	>1550							
	128.52	1340	>1550		>1550								
	135.28	1410	>1550		>1550								
	154.02	>1550											
	179.37												
	192.18												

→ 📖 144

m [kg]		CMP											
	s	63S	63M	63L	71S	71M	71L	80S	80M	80L	100S	100M	100L
K77	3	59	60	62	64	65	67	69	71	75	75	80	88
KF: + 8.3 kg / KA: + -7.5 kg / KAF: + 0.4 kg													

CMP..	i	n_{epk} [1/min]	η [%]	c_{TG} K [Nm/']	KF [Nm/']	KA [Nm/']	KAF [Nm/']	φ /R [']
K77 3	7.24	4500	96	110	91	188	188	8
	8.48	4500	96	110	91	188	188	8
	9.56	4500	96	110	91	188	188	8
	10.84	4500	96	110	91	188	188	8
	12.36	4500	96	110	91	188	188	8
	13.52	4500	96	141	112	300	300	7
	15.84	4500	96	141	112	300	300	6
	17.87	4500	96	141	112	300	300	6
	20.25	4500	96	141	112	300	300	6
	23.08	4500	96	141	112	300	300	6
	25.62	4500	96	141	112	300	300	6
	29.27	4500	96	141	112	300	300	6
	30.89	4500	96	141	112	300	300	6
	35.20	4500	96	141	112	300	300	6
	38.39	4500	96	141	112	300	300	6
	40.04	4500	95	150	118	348	348	6
	45.16	4500	95	150	118	348	348	6
	51.18	4500	95	150	118	348	348	6
	58.34	4500	95	150	118	348	348	6
	64.75	4500	95	150	118	348	348	5
	73.99	4500	95	150	118	348	348	5
	78.07	4500	95	150	118	348	348	5
	88.97	4500	95	150	118	348	348	5
	97.05	4500	95	150	118	348	348	5
	113.56	4500	94	150	118	348	348	5
	128.52	4500	94	150	118	348	348	5
	135.28	4500	94	150	118	348	348	5
	154.02	4500	94	150	118	348	348	5
	179.37	4500	94	150	118	348	348	5
	192.18	4500	93	150	118	348	348	5

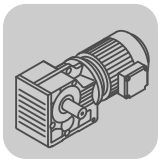

K..CMP
K..[mm]

CMP..							F_{Ramax}				F_{Rapk}			
n_e = 1400	i	M_{amax} [Nm]	M_{apk} [Nm]	$M_{aNotaus}$ [Nm]	n_{ak} [1/min]	J_G 10^{-4} [kgm^2]	K [N]	KF [N]	KA [N]	KAF [N]	K [N]	KF [N]	KA [N]	KAF [N]
K77  3	7.24	820	1150	1394	207	17	13100	13800	2490	2490	17700	17700	20000	20000
	8.48	890	1160	1513	177	13	13500	14300	2430	2430	17600	17700	20000	20000
	9.56	940	1160	1598	157	10	13900	14700	2430	2430	17600	17700	20000	20000
	10.84	990	1170	1683	138	8.2	14400	15200	2460	2460	17600	17700	20000	20000
	12.36	1000	1170	1700	121	6.5	15100	16000	2820	2820	17600	17700	20000	20000
	13.52	1340	1550	2278	155	15	14800	15800	1850	1850	15400	16600	20000	20000
	15.84	1400	1550	2380	145	11	15500	16600	2030	2030	15400	16600	20000	20000
	17.87	1450	1550	2465	140	9.0	16100	16900	2160	2160	15400	16600	20000	20000
	20.25	1500	1550	2550	128	7.2	15700	16800	2330	2330	15400	16600	20000	20000
	23.08	1550	1550	2635	126	5.8	15400	16600	2550	2550	15400	16600	20000	20000
	25.62	1550	1550	2635	133	5.0	15400	16600	2990	2990	15400	16600	20000	20000
	29.27	1550	1550	2635	137	4.0	15400	16600	3590	3590	15400	16600	20000	20000
	30.89	1550	1550	2635	142	3.6	15400	16600	3840	3840	15400	16600	20000	20000
	35.20	1550	1550	2635	142	2.9	15400	16600	4460	4460	15400	16600	20000	20000
	38.39	1500	1550	2550	159	2.5	15700	16800	5210	5210	15400	16600	20000	20000
	40.04	1550	1550	2635	37	6.0	15400	16600	5100	5100	15400	16600	20000	20000
	45.16	1550	1550	2635	33	4.9	15400	16600	5720	5720	15400	16600	20000	20000
	51.18	1550	1550	2635	29	4.1	15400	16600	6390	6390	15400	16600	20000	20000
	58.34	1550	1550	2635	31	3.3	15400	16600	7130	7130	15400	16600	20000	20000
	64.75	1550	1550	2635	31	3.0	15400	16600	7740	7740	15400	16600	20000	20000
	73.99	1550	1550	2635	31	2.4	15400	16600	8550	8550	15400	16600	20000	20000
	78.07	1550	1550	2635	32	2.3	15400	16600	8890	8890	15400	16600	20000	20000
	88.97	1550	1550	2635	33	1.9	15400	16600	9730	9730	15400	16600	20000	20000
	97.05	1550	1550	2635	32	1.6	15400	16600	10300	10300	15400	16600	20000	20000
	113.56	1550	1550	2635	33	1.3	15400	16600	11400	11400	15400	16600	20000	20000
	128.52	1550	1550	2635	33	0.90	15400	16600	12300	12300	15400	16600	20000	20000
	135.28	1550	1550	2635	33	0.81	15400	16600	12700	12700	15400	16600	20000	20000
	154.02	1550	1550	2635	33	0.66	15400	16600	13700	13700	15400	16600	20000	20000
	179.37	1450	1550	2465	39	0.53	16100	16900	15600	15600	15400	16600	20000	20000
	192.18	1450	1550	2465	36	0.46	16100	16900	16200	16200	15400	16600	20000	20000

33 029 00 07

K77..

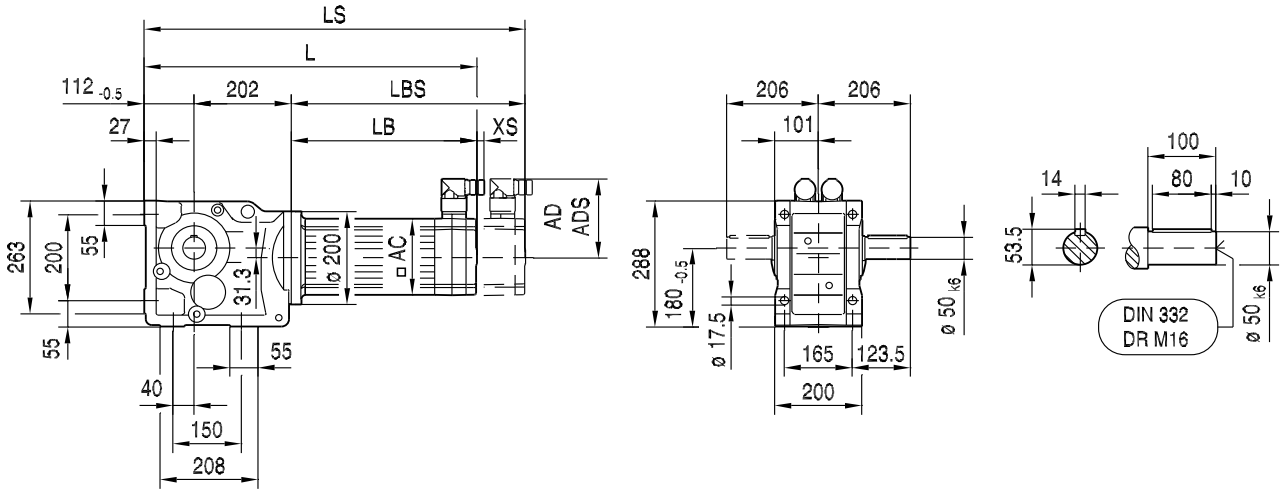

KA77B..

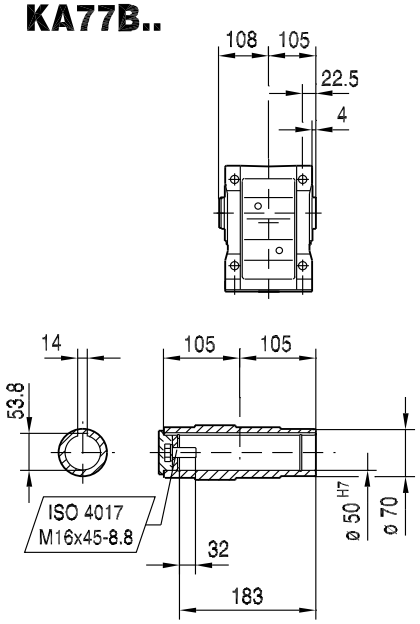

KH77B..

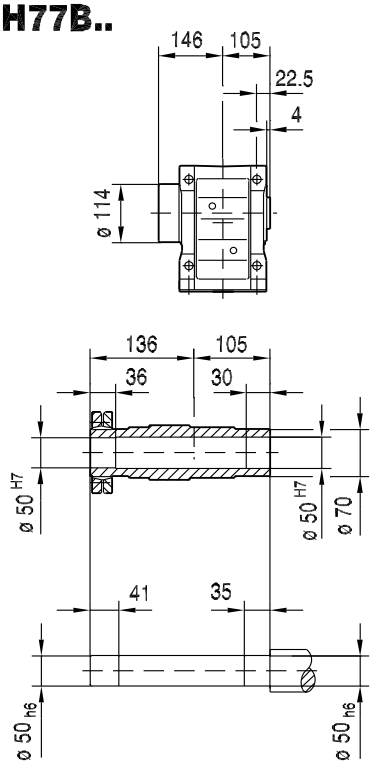

KV77B..

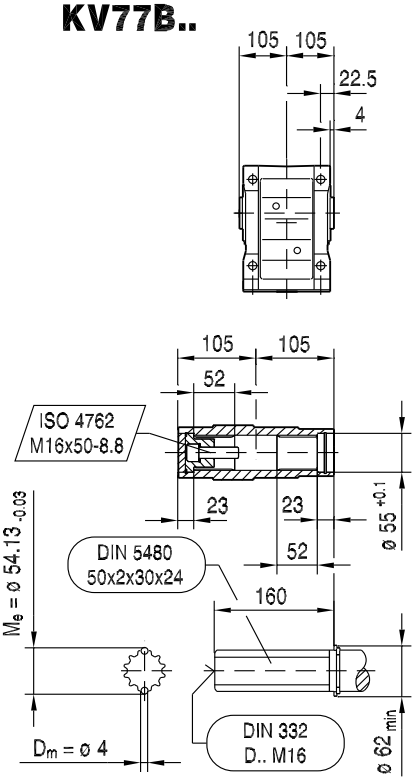

(→ 144)	CMP63M	CMP63L	CMP71S	CMP71M	CMP71L	CMP80S	CMP80M	CMP80L	CMP100S	CMP100M	CMP100L
AC	88	88	115	115	115	137	137	137	162	162	162
AD	92	92	102	102	102	134	134	134	146	146	146
ADS	92	92	104	104	104	137	137	137	147	147	147
L	531	581	472	497	547	512	546	614	544	584	664
LS	560	610	537	562	612	590	624	692	640	680	760
LB	217	267	158	183	233	198	232	300	230	270	350
LBS	246	296	223	248	298	276	310	378	326	366	446
XS	14	14	11	11	11	37	37	37	37	37	37

33 030 00 07

KF77..

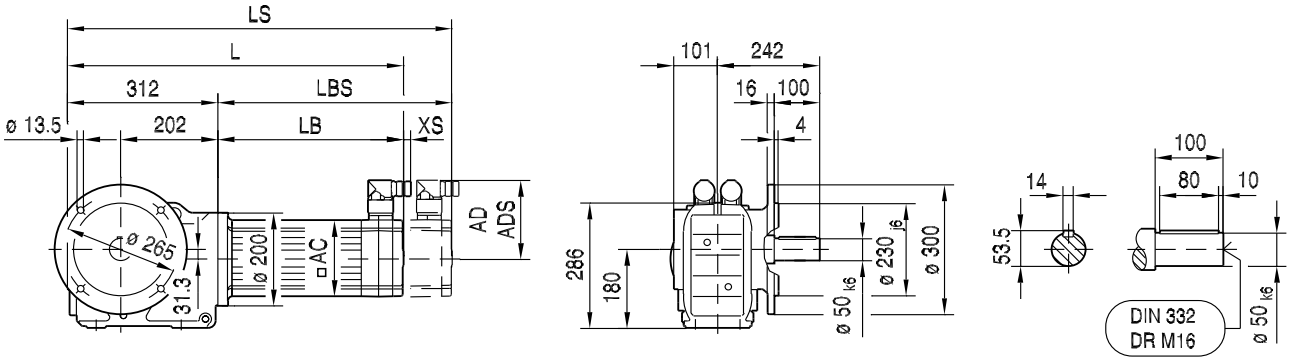

KAF77..

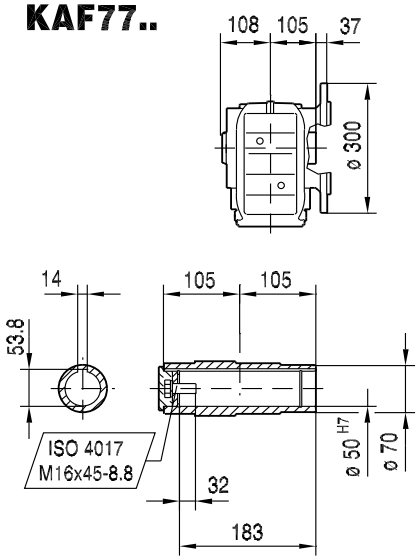

KHF77..

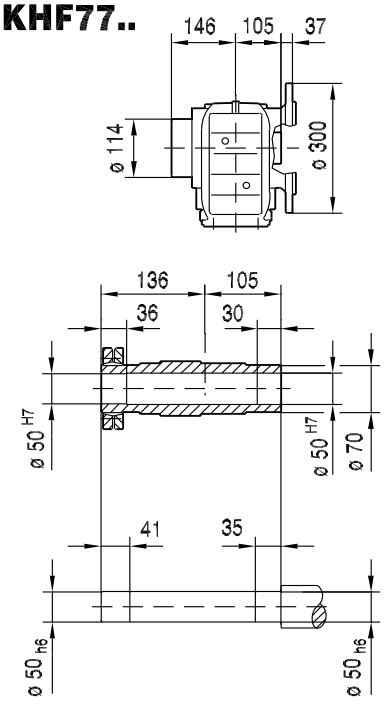

KVF77..

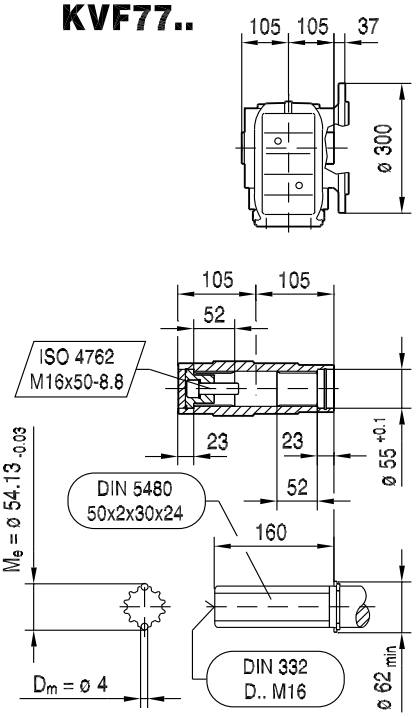

(→ 📖 144)	CMP63M	CMP63L	CMP71S	CMP71M	CMP71L	CMP80S	CMP80M	CMP80L	CMP100S	CMP100M	CMP100L
AC	88	88	115	115	115	137	137	137	162	162	162
AD	92	92	102	102	102	134	134	134	146	146	146
ADS	92	92	104	104	104	137	137	137	147	147	147
L	529	579	470	495	545	510	544	612	542	582	662
LS	558	608	535	560	610	588	622	690	638	678	758
LB	217	267	158	183	233	198	232	300	230	270	350
LBS	246	296	223	248	298	276	310	378	326	366	446
XS	14	14	11	11	11	37	37	37	37	37	37

KA77..

33 031 00 07

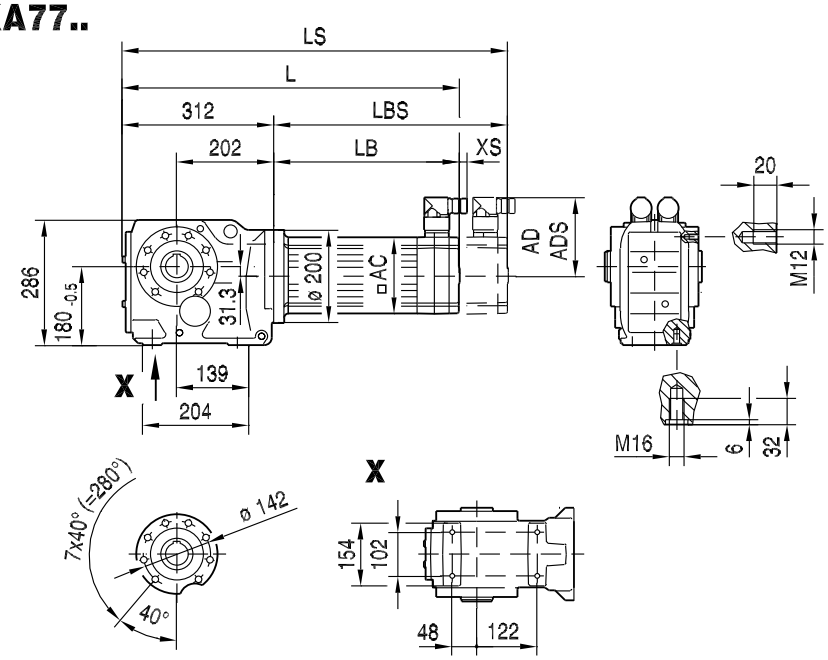

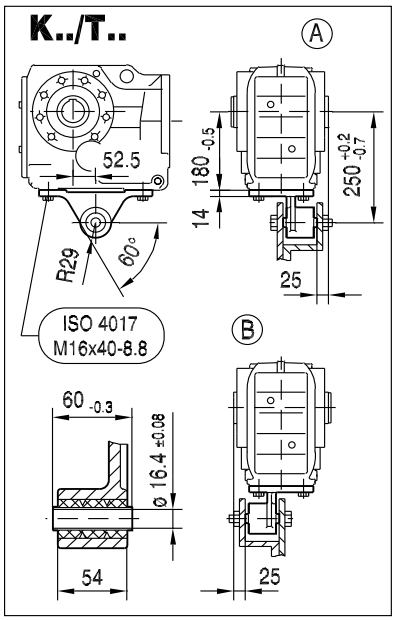

10

KA77..

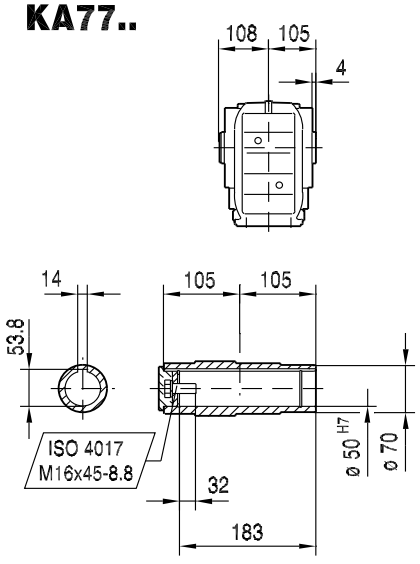

KH77..

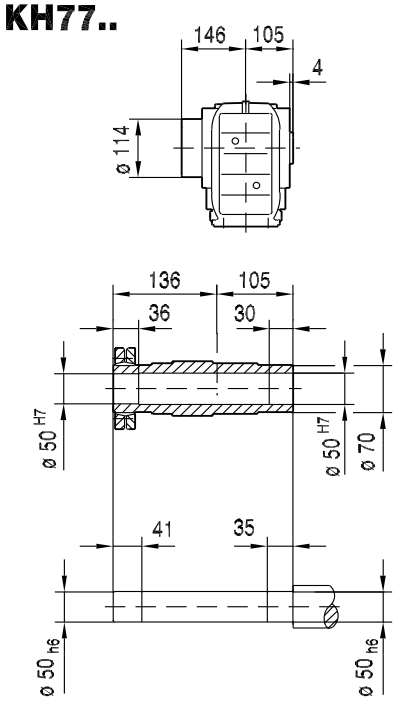

KV77..

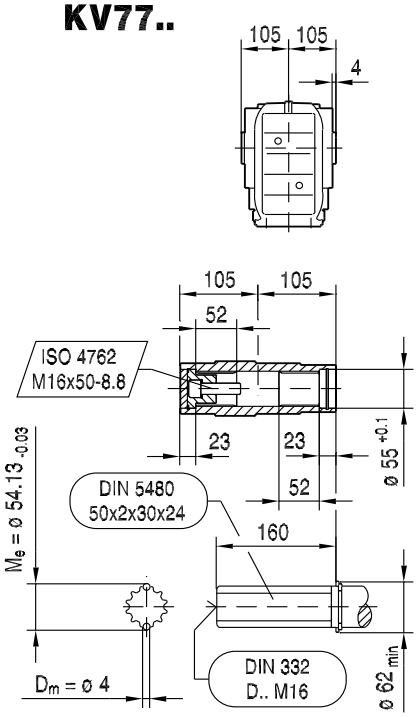

(→ 144)	CMP63M	CMP63L	CMP71S	CMP71M	CMP71L	CMP80S	CMP80M	CMP80L	CMP100S	CMP100M	CMP100L
AC	88	88	115	115	115	137	137	137	162	162	162
AD	92	92	102	102	102	134	134	134	146	146	146
ADS	92	92	104	104	104	137	137	137	147	147	147
L	529	579	470	495	545	510	544	612	542	582	662
LS	558	608	535	560	610	588	622	690	638	678	758
LB	217	267	158	183	233	198	232	300	230	270	350
LBS	246	296	223	248	298	276	310	378	326	366	446
XS	14	14	11	11	11	37	37	37	37	37	37

KAZ77..

33 032 00 07

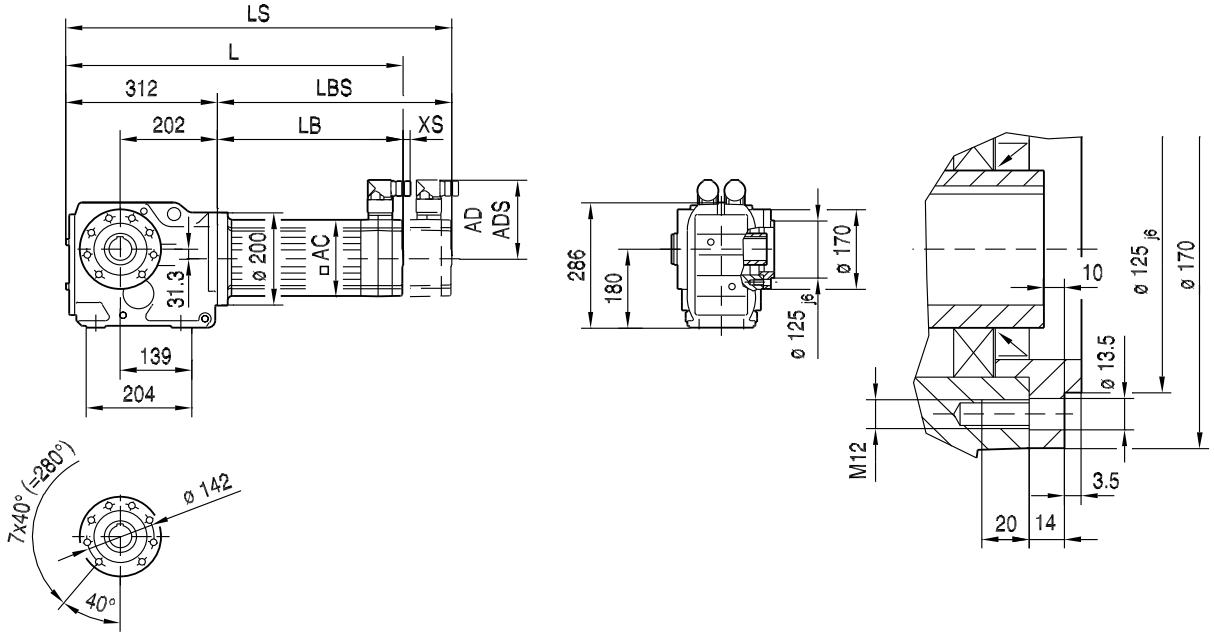

KAZ77..

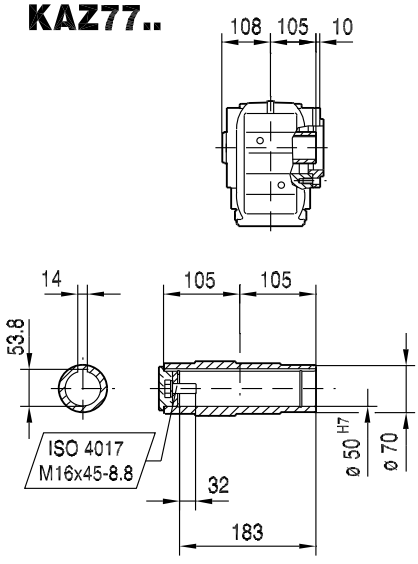

KHZ77..

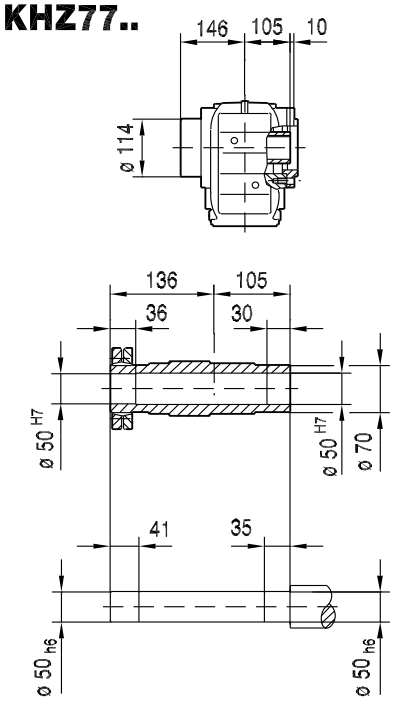

KVZ77..

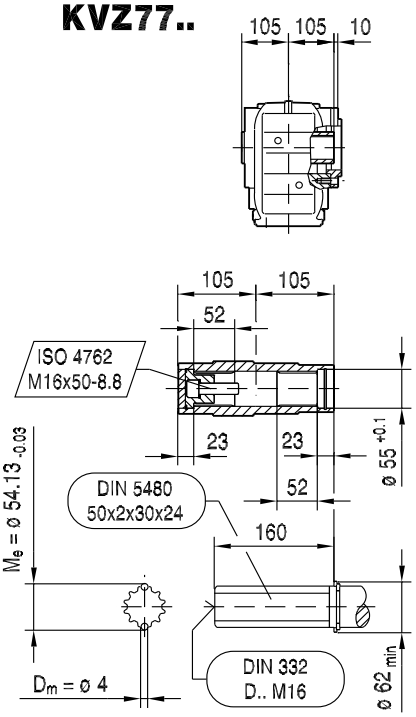

(→ 144)	CMP63M	CMP63L	CMP71S	CMP71M	CMP71L	CMP80S	CMP80M	CMP80L	CMP100S	CMP100M	CMP100L
AC	88	88	115	115	115	137	137	137	162	162	162
AD	92	92	102	102	102	134	134	134	146	146	146
ADS	92	92	104	104	104	137	137	137	147	147	147
L	529	579	470	495	545	510	544	612	542	582	662
LS	558	608	535	560	610	588	622	690	638	678	758
LB	217	267	158	183	233	198	232	300	230	270	350
LBS	246	296	223	248	298	276	310	378	326	366	446
XS	14	14	11	11	11	37	37	37	37	37	37

KT77..

33 033 00 07

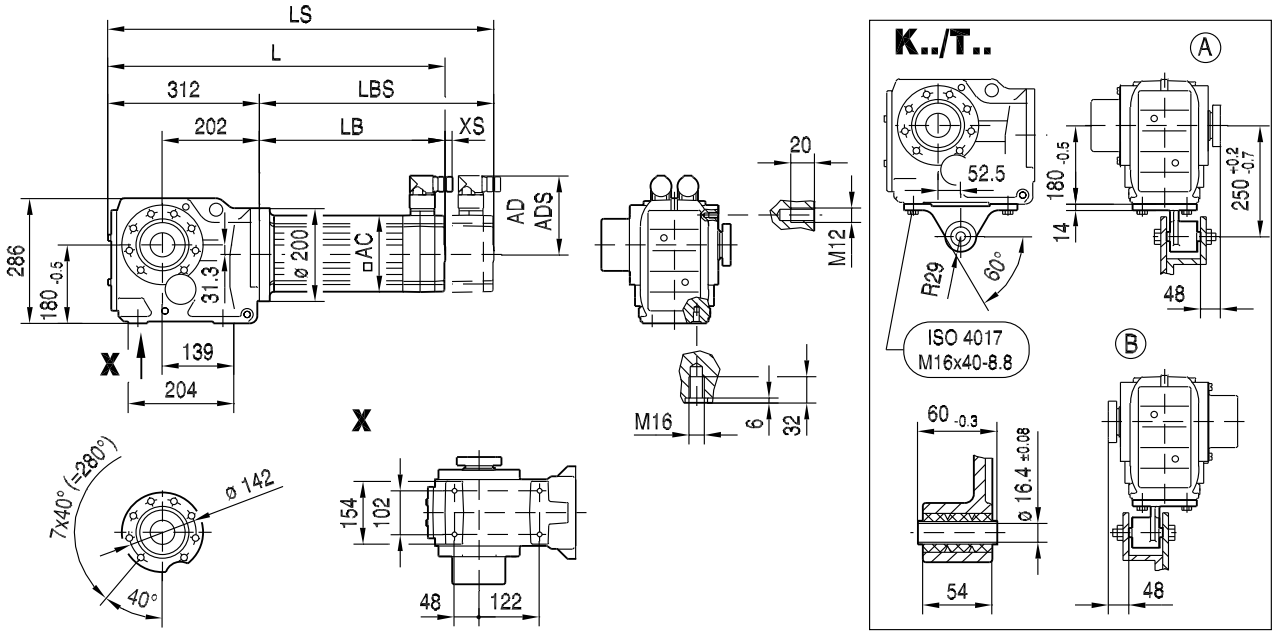

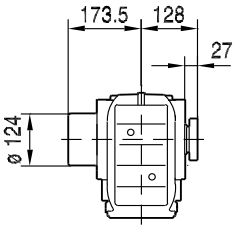

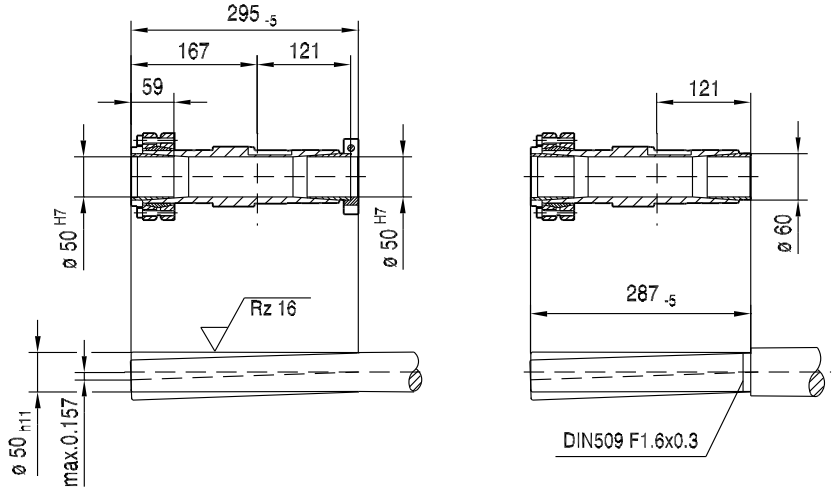

(→ 144)	CMP63M	CMP63L	CMP71S	CMP71M	CMP71L	CMP80S	CMP80M	CMP80L	CMP100S	CMP100M	CMP100L
AC	88	88	115	115	115	137	137	137	162	162	162
AD	92	92	102	102	102	134	134	134	146	146	146
ADS	92	92	104	104	104	137	137	137	147	147	147
L	529	579	470	495	545	510	544	612	542	582	662
LS	558	608	535	560	610	588	622	690	638	678	758
LB	217	267	158	183	233	198	232	300	230	270	350
LBS	246	296	223	248	298	276	310	378	326	366	446
XS	14	14	11	11	11	37	37	37	37	37	37

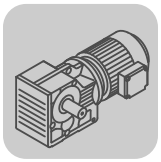

10.2.6 K 87

M_{aDyn} [Nm]		CMP								
	i	71S	71M	71L	80S	80M	80L	100S	100M	100L
K87 3	7.21					430	740	470	745	1230
	8.29		245	370	335	495	850	540	850	1420
	10.00		295	450	400	600	1020	655	1030	1710
	11.17	205	330	500	450	670	1140	730	1150	1910
	12.56					750	1290	820	1300	2150
	14.45		425	650	580	860	1480	940	1490	2480
	16.00	290	470	720	645	960	1640	1040	1650	>2270
	17.42		515	780	700	1040	1780	1140	1800	2990
	19.45	355	575	870	785	1160	1990	1270	2010	>3240
	22.41	410	660	1000	900	1340	2300	1460	2320	>3240
	24.92	455	735	1120	1000	1490	2550	1630	2580	>3240
	27.88	510	820	1250	1120	1670	2860	1820	2890	>3240
	31.39	575	920	1410	1260	1880	3220	2050	>3240	>3240
	36.52		1060	1620	1460	2170	>3240	2360	>3240	>3240
	44.02		1280	1960	1760	2610	>3240	2850	>3240	>3240
	49.16	890	1430	2190	1960	2920	>3240	3180	>3240	>3240
	56.64	1030	1650	2520	2260	>3240	>3240	>3240	>3240	>3240
	63.00	1140	1840	2800	2510	>3240	>3240	>3240	>3240	>3240
	70.46	1280	2060	3130	2810	>3240	>3240	>3240	>3240	>3240
	79.34	1440	2320	>3240	3170	>3240	>3240	>3240	>3240	>3240
	86.34	1570	2520	>3240	>3240	>3240		>3240		
	102.71	1870	3000	>3240	>3240	>3240		>3240		
	115.82	2110	>3240	>3240	>3240					
	126.91	2310	>3240	>3240	>3240					
	147.32	2650	>3240							
	164.34	2960								
	174.19	3140								
	197.37									

→ 📖 144

m [kg]		CMP								
	s	71S	71M	71L	80S	80M	80L	100S	100M	100L
K87	3	100	100	105	105	110	115	110	115	125
KF: + 9.2 kg / KA: + -12.1 kg / KAF: + 1.1 kg										

CMP..	i	n_{epk} [1/min]	η [%]	c_{TG} K [Nm/']	KF [Nm/']	KA [Nm/']	KAF [Nm/']	φ /R [']
K87 3	7.21	4378	96	169	156	411	411	7
	8.29	4500	96	169	156	411	411	7
	10.00	4500	96	169	156	411	411	7
	11.17	4500	96	169	156	411	411	7
	12.56	4378	96	198	181	640	640	6
	14.45	4500	96	198	181	640	640	6
	16.00	4500	96	169	156	411	411	6
	17.42	4500	96	198	181	640	640	6
	19.45	4500	96	198	181	640	640	6
	22.41	4500	96	198	181	640	640	6
	24.92	4500	96	198	181	640	640	6
	27.88	4500	96	198	181	640	640	6
	31.39	4500	96	198	181	640	640	6
	36.52	4500	95	207	188	744	744	6
	44.02	4500	95	207	188	744	744	6
	49.16	4500	95	207	188	744	744	5
	56.64	4500	95	207	188	744	744	5
	63.00	4500	95	207	188	744	744	5
	70.46	4500	95	207	188	744	744	5
	79.34	4500	95	207	188	744	744	5
	86.34	4500	95	207	188	744	744	5
	102.71	4500	95	207	188	744	744	5
	115.82	4500	95	207	188	744	744	5
	126.91	4500	95	207	188	744	744	5
	147.32	4500	94	207	188	744	744	5
	164.34	4500	94	207	188	744	744	5
	174.19	4500	94	207	188	744	744	5
	197.37	4500	94	207	188	744	744	5

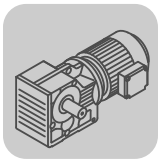

K..CMP
K..[mm]

CMP..							F_{Ramax}				F_{Rapk}			
n_e = 1400	i	M_{amax} [Nm]	M_{apk} [Nm]	$M_{aNotaus}$ [Nm]	n_{ak} [1/min]	J_G 10^{-4} [kgm^2]	K [N]	KF [N]	KA [N]	KAF [N]	K [N]	KF [N]	KA [N]	KAF [N]
	7.21	1300	1950	2210	250	46	13200	15100	4970	4970	28100	27000	30000	30000
	8.29	1400	2100	2380	205	35	13500	15600	4960	4960	27900	26900	30000	30000
	10.00	1500	2240	2550	180	26	14200	16400	5210	5210	27800	26700	30000	30000
	11.17	1500	2250	2550	188	22	14900	17100	5770	5770	27800	26700	30000	30000
	12.56	2000	3000	3400	223	42	14800	17000	5030	5030	26900	25900	30000	30000
	14.45	2100	3150	3570	201	32	15300	17700	5240	5240	26700	25700	30000	30000
	16.00	1800	2270	3060	119	12	16000	18500	5810	5810	27700	26700	30000	30000
	17.42	2200	3240	3740	189	24	16300	18800	5770	5770	26500	25600	30000	30000
	19.45	2300	3240	3910	170	20	16800	19300	5890	5890	26500	25600	30000	30000
	22.41	2300	3240	3910	178	16	17900	20600	6790	6790	26500	25600	30000	30000
	24.92	2500	3240	4250	140	14	18000	20700	6390	6390	26500	25600	30000	30000
	27.88	2600	3240	4420	122	12	18500	21400	6600	6600	26500	25600	30000	30000
	31.39	2700	3240	4590	108	9.6	19200	22100	6900	6900	26500	25600	30000	30000
K87	36.52	2500	3240	4250	41	20	21400	24500	9140	9140	26500	25600	30000	30000
3	44.02	2600	3240	4420	39	16	22800	26000	10100	10100	26500	25600	30000	30000
	49.16	2700	3240	4590	35	14	23500	26300	10400	10400	26500	25600	30000	30000
	56.64	2700	3240	4590	35	11	25000	26300	11600	11600	26500	25600	30000	30000
	63.00	2700	3240	4590	35	9.8	26200	26300	12600	12600	26500	25600	30000	30000
	70.46	2700	3240	4590	35	8.4	27300	26300	13700	13700	26500	25600	30000	30000
	79.34	2700	3240	4590	37	7.1	27300	26300	14800	14800	26500	25600	30000	30000
	86.34	2700	3240	4590	37	6.3	27300	26300	15700	15700	26500	25600	30000	30000
	102.71	2700	3240	4590	38	4.9	27300	26300	17500	17500	26500	25600	30000	30000
	115.82	2700	3240	4590	38	4.0	27300	26300	18800	18800	26500	25600	30000	30000
	126.91	2700	3240	4590	39	3.5	27300	26300	19900	19900	26500	25600	30000	30000
	147.32	2700	3240	4590	39	2.8	27300	26300	21600	21600	26500	25600	30000	30000
	164.34	2700	3240	4590	39	1.8	27300	26300	23000	23000	26500	25600	30000	30000
	174.19	2700	3240	4590	39	1.6	27300	26300	23700	23700	26500	25600	30000	30000
	197.37	2700	3240	4590	35	1.3	27300	26300	25400	25400	26500	25600	30000	30000

33 034 00 07

K87..

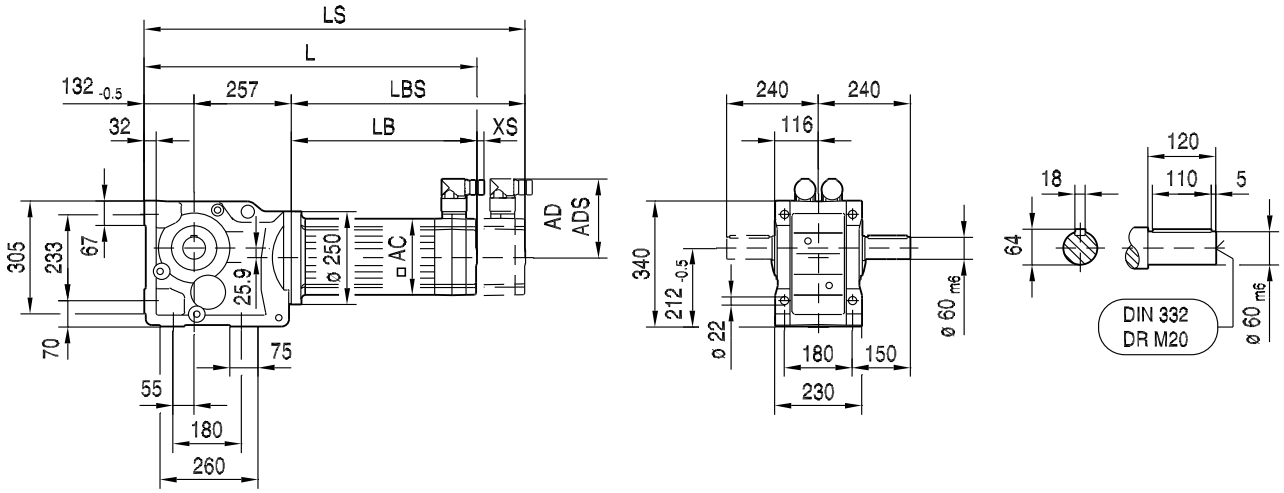

KA87B..

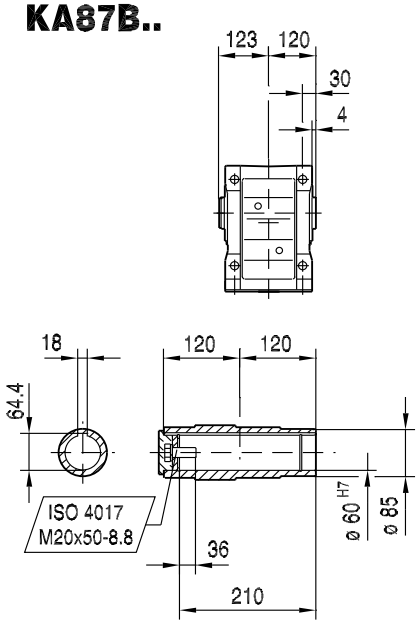

KH87B..

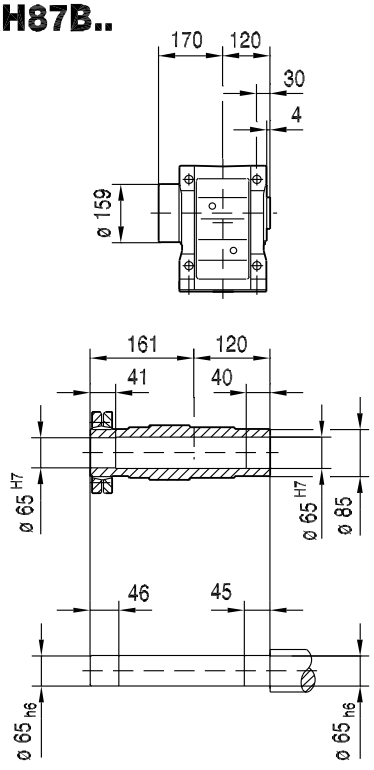

KV87B..

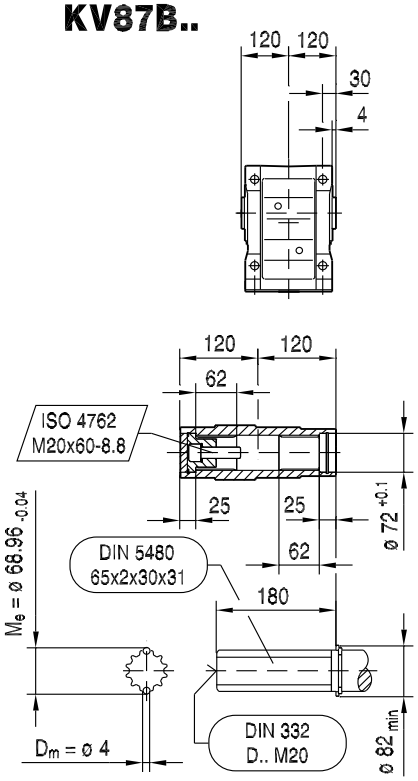

(→ 144)	CMP71S	CMP71M	CMP71L	CMP80S	CMP80M	CMP80L	CMP100S	CMP100M	CMP100L
AC	115	115	115	137	137	137	162	162	162
AD	102	102	102	134	134	134	146	146	146
ADS	104	104	104	137	137	137	147	147	147
L	543	568	618	582	616	684	614	654	734
LS	608	633	683	660	694	762	710	750	830
LB	154	179	229	193	227	295	225	265	345
LBS	219	244	294	271	305	373	321	361	441
XS	11	11	11	37	37	37	37	37	37

33 035 00 07

KF87..

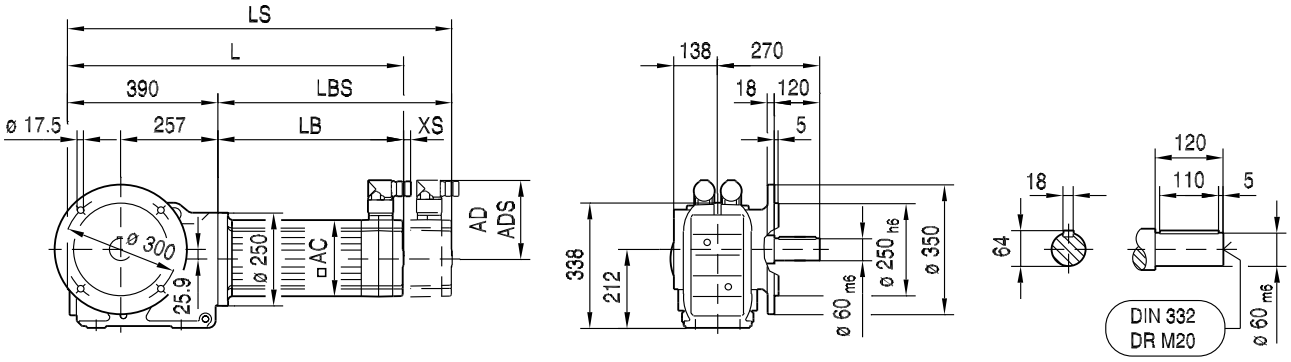

KAF87..

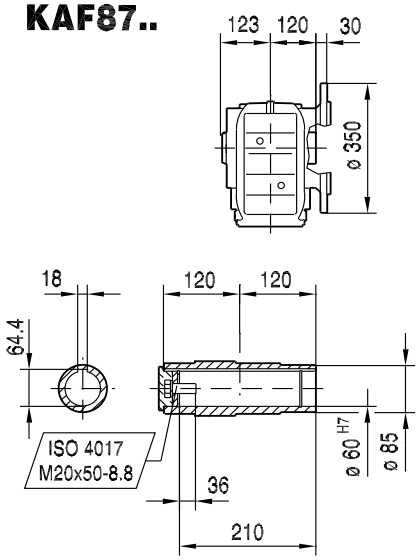

KHF87..

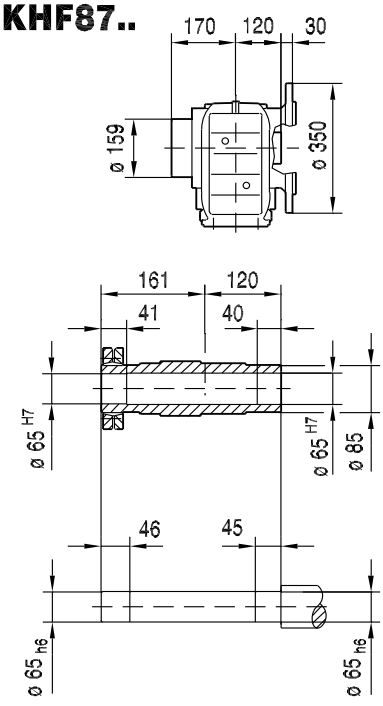

KVF87..

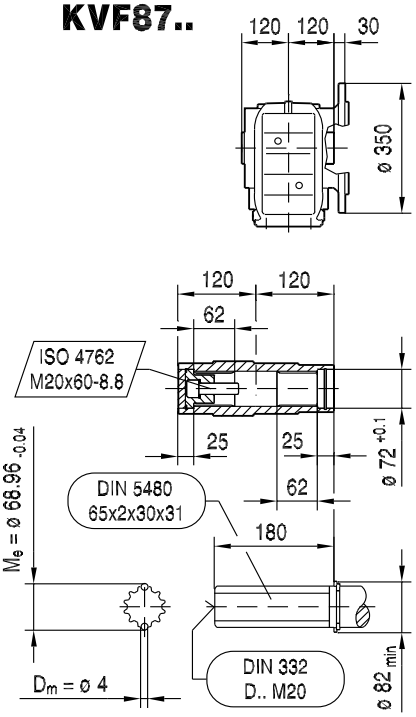

(→ 144)	CMP71S	CMP71M	CMP71L	CMP80S	CMP80M	CMP80L	CMP100S	CMP100M	CMP100L
AC	115	115	115	137	137	137	162	162	162
AD	102	102	102	134	134	134	146	146	146
ADS	104	104	104	137	137	137	147	147	147
L	544	569	619	583	617	685	615	655	735
LS	609	634	684	661	695	763	711	751	831
LB	154	179	229	193	227	295	225	265	345
LBS	219	244	294	271	305	373	321	361	441
XS	11	11	11	37	37	37	37	37	37

KA87..

33 036 00 07

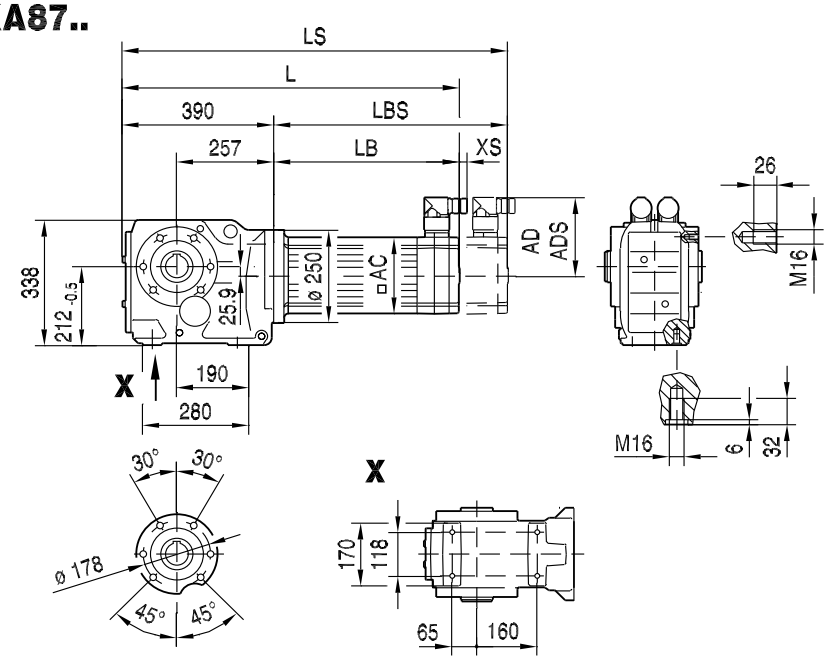

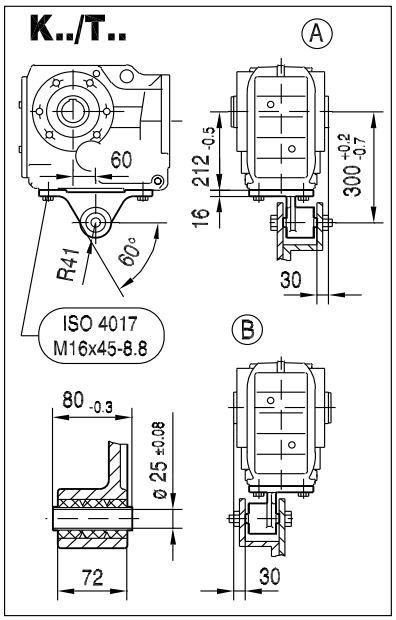

10

KA87..

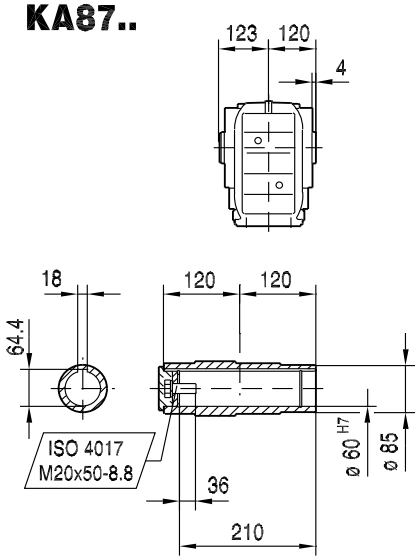

KH87..

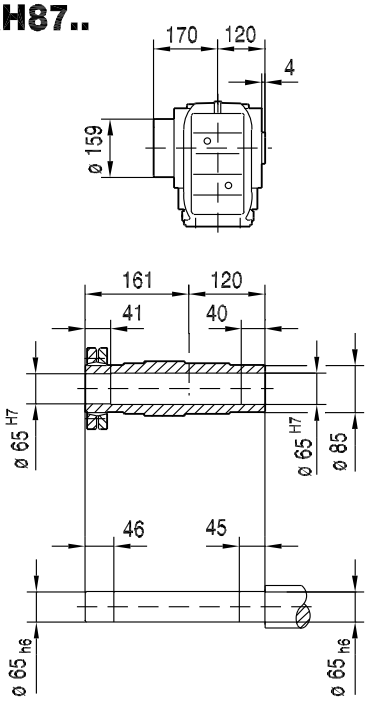

KV87..

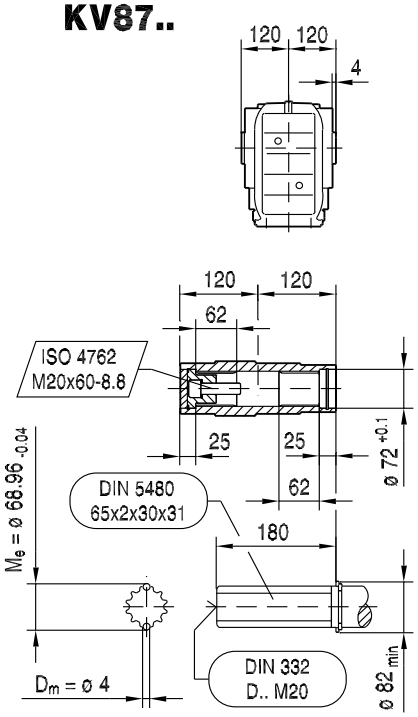

(→ 144)	CMP71S	CMP71M	CMP71L	CMP80S	CMP80M	CMP80L	CMP100S	CMP100M	CMP100L
AC	115	115	115	137	137	137	162	162	162
AD	102	102	102	134	134	134	146	146	146
ADS	104	104	104	137	137	137	147	147	147
L	544	569	619	583	617	685	615	655	735
LS	609	634	684	661	695	763	711	751	831
LB	154	179	229	193	227	295	225	265	345
LBS	219	244	294	271	305	373	321	361	441
XS	11	11	11	37	37	37	37	37	37

KAZ87..

33 037 00 07

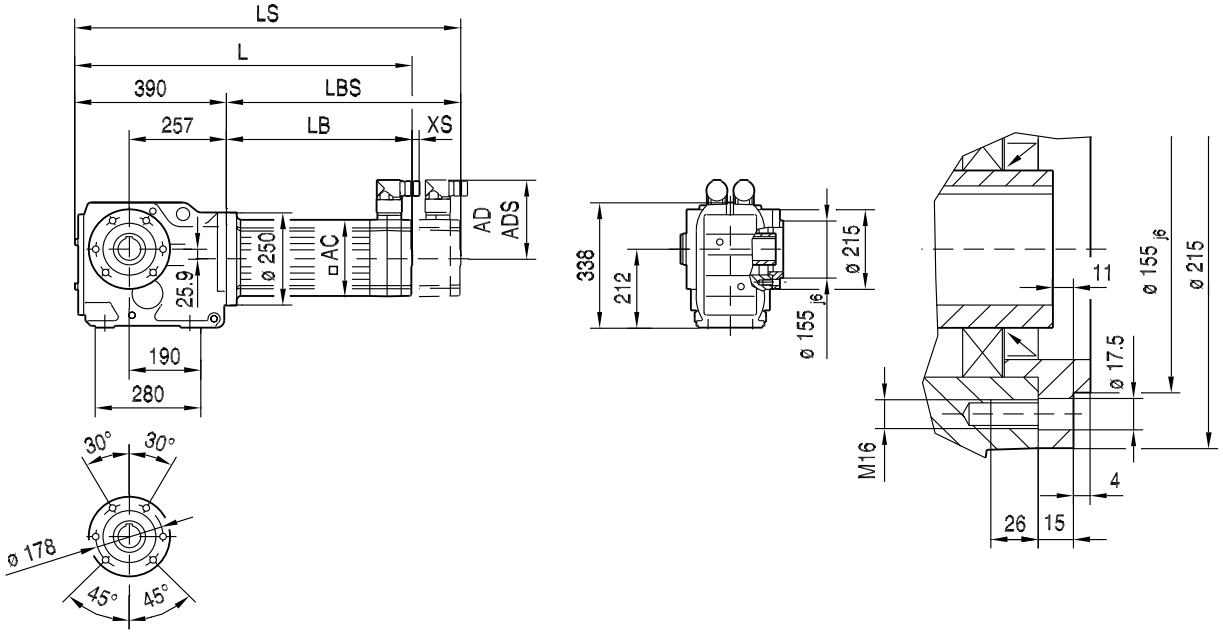

KAZ87..

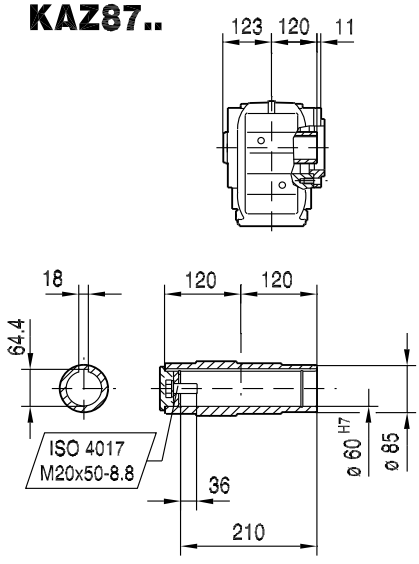

KHZ87..

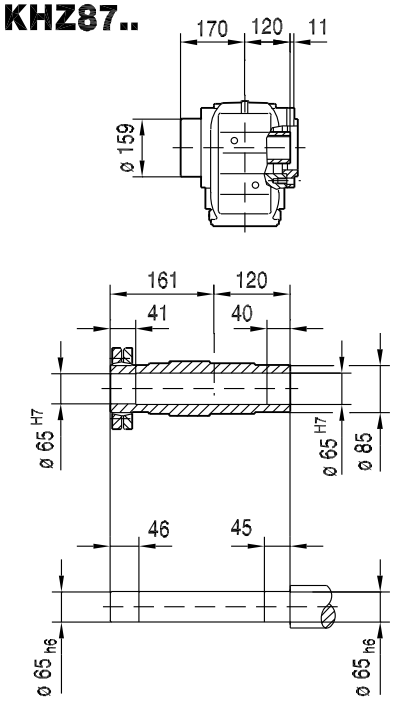

KVZ87..

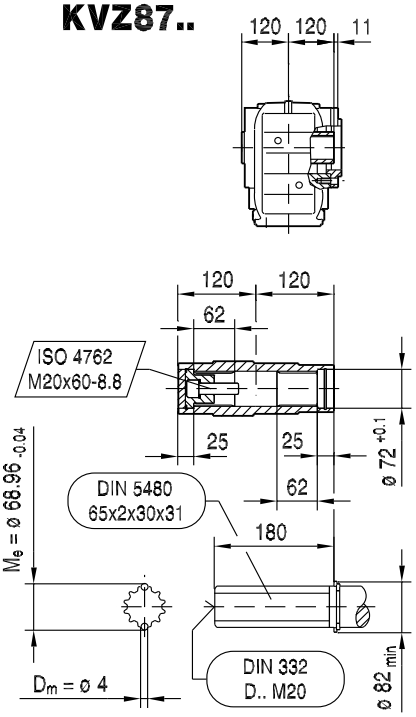

(→ 📖 144)	CMP71S	CMP71M	CMP71L	CMP80S	CMP80M	CMP80L	CMP100S	CMP100M	CMP100L
AC	115	115	115	137	137	137	162	162	162
AD	102	102	102	134	134	134	146	146	146
ADS	104	104	104	137	137	137	147	147	147
L	544	569	619	583	617	685	615	655	735
LS	609	634	684	661	695	763	711	751	831
LB	154	179	229	193	227	295	225	265	345
LBS	219	244	294	271	305	373	321	361	441
XS	11	11	11	37	37	37	37	37	37

KT87..

33 038 00 07

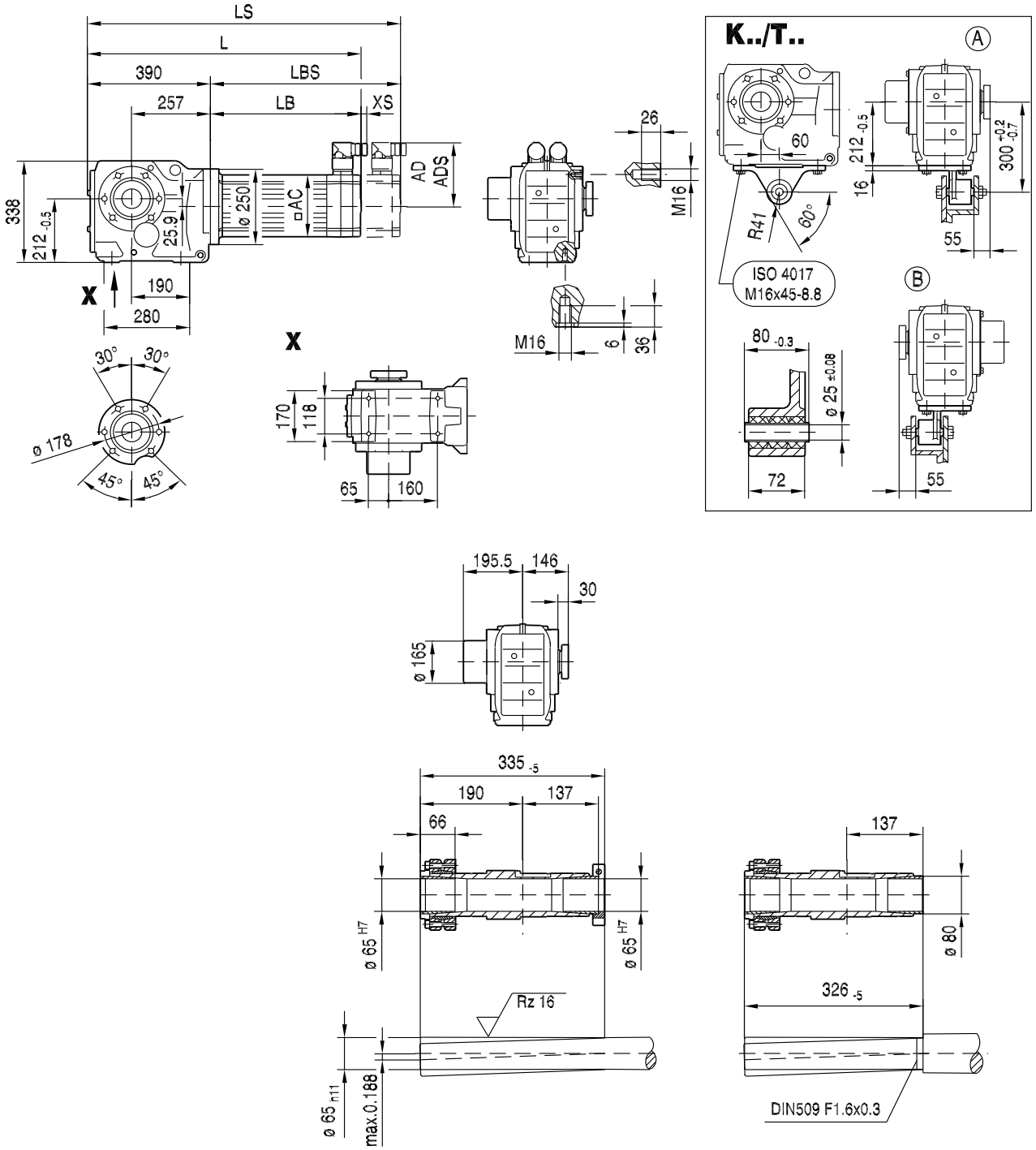

(→ 144)	CMP71S	CMP71M	CMP71L	CMP80S	CMP80M	CMP80L	CMP100S	CMP100M	CMP100L
AC	115	115	115	137	137	137	162	162	162
AD	102	102	102	134	134	134	146	146	146
ADS	104	104	104	137	137	137	147	147	147
L	544	569	619	583	617	685	615	655	735
LS	609	634	684	661	695	763	711	751	831
LB	154	179	229	193	227	295	225	265	345
LBS	219	244	294	271	305	373	321	361	441
XS	11	11	11	37	37	37	37	37	37

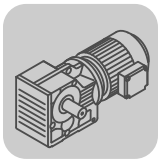

10.2.7 K 97

M_{aDyn} [Nm]		CMP					
	i	80S	80M	80L	100S	100M	100L
K97  3	7.54		450	770	490	780	1290
	8.71		520	890	570	900	1490
	10.41		625	1060	680	1070	1780
	11.99		720	1230	785	1240	2050
	13.85		830	1420	900	1430	2370
	16.56		990	1700	1080	1710	2840
	18.96	765	1130	1940	1240	1960	3250
	22.37	900	1340	2290	1460	2310	3830
	24.75	1000	1480	2540	1620	2560	4240
	27.91	1120	1670	2860	1830	2890	>4710
	30.82	1240	1850	3160	2020	3190	>4710
	34.23	1380	2050	3510	2240	3540	>4710
	38.30	1540	2300	3930	2510	3970	>4710
	41.87		2430	4160	2650	4200	>4710
	47.93	1890	2820	>4710	3070	>4710	>4710
	56.55	2230	3320	>4710	3630	>4710	>4710
	62.55	2470	3680	>4710	4010	>4710	>4710
	70.54	2790	4150	>4710	4520	>4710	>4710
	77.89	3080	4580	>4710	>4710	>4710	>4710
	86.52	3420	>4710	>4710	>4710	>4710	>4710
	96.80	3830	>4710	>4710	>4710	>4710	>4710
	105.13	4160	>4710		>4710		
	123.93	>4710	>4710		>4710		
	140.28	>4710					
	153.21	>4710					
	176.05						

→ 📖 144

m [kg]		CMP					
	s	80S	80M	80L	100S	100M	100L
K97	3	165	170	170	175	180	185
KF: + 20.1 kg / KA: + -18.2 kg / KAF: + 6.7 kg							

CMP..	i	n_{epk} [1/min]	η [%]	c_{TG} K [Nm/']	KF [Nm/']	KA [Nm/']	KAF [Nm/']	φ /R [']
K97 3	7.54	3597	96	264	237	581	581	10
	8.71	4500	96	264	237	581	581	10
	10.41	4500	96	264	237	581	581	10
	11.99	4500	96	301	267	791	791	8
	13.85	4500	96	301	267	791	791	8
	16.56	4500	96	301	267	791	791	8
	18.96	4500	96	301	267	791	791	8
	22.37	4500	96	301	267	791	791	8
	24.75	4500	96	301	267	791	791	8
	27.91	4500	96	301	267	791	791	8
	30.82	4500	96	301	267	791	791	7
	34.23	4500	96	301	267	791	791	7
	38.30	4500	96	301	267	791	791	7
	41.87	4378	93	314	278	892	892	7
	47.93	4500	94	314	278	892	892	7
	56.55	4500	94	314	278	892	892	7
	62.55	4500	94	314	278	892	892	7
	70.54	4500	94	314	278	892	892	7
	77.89	4500	94	314	278	892	892	7
	86.52	4500	94	314	278	892	892	7
	96.80	4500	94	314	278	892	892	7
	105.13	4500	94	314	278	892	892	7
	123.93	4500	94	314	278	892	892	7
	140.28	4500	94	314	278	892	892	7
	153.21	4500	94	314	278	892	892	7
	176.05	4500	94	314	278	892	892	7

CMP..							F_{Ramax}				F_{Rapk}			
n_e = 1400	i	M_{amax} [Nm]	M_{apk} [Nm]	$M_{aNotaus}$ [Nm]	n_{ak} [1/min]	J_G 10^{-4} [kgm^2]	K [N]	KF [N]	KA [N]	KAF [N]	K [N]	KF [N]	KA [N]	KAF [N]
K97 3	7.54	2400	3560	4080	279	120	15700	18100	10200	10200	40000	39300	40000	40000
	8.71	2660	3590	4522	218	94	15800	18200	9930	9930	40000	39300	40000	40000
	10.41	2870	3610	4879	183	71	16400	19000	10300	10300	40000	39300	40000	40000
	11.99	3890	4710	6613	167	115	16200	18800	9100	9100	40000	38300	40000	40000
	13.85	4300	4710	7310	130	91	16100	18900	8520	8520	40000	38300	40000	40000
	16.56	4300	4710	7310	139	69	17800	20700	10300	10300	40000	38300	40000	40000
	18.96	4300	4710	7310	148	55	19100	22100	11700	11700	40000	38300	40000	40000
	22.37	4300	4710	7310	156	43	20900	24000	13500	13500	40000	38300	40000	40000
	24.75	4300	4710	7310	166	37	22000	25200	14700	14700	40000	38300	40000	40000
	27.91	4300	4710	7310	168	30	23300	26600	16100	16100	40000	38300	40000	40000
	30.82	4300	4710	7310	172	26	24500	27800	17300	17300	40000	38300	40000	40000
	34.23	4300	4710	7310	178	22	25700	29200	18600	18600	40000	38300	40000	40000
	38.30	4300	4710	7310	183	18	27100	30700	20100	20100	40000	38300	40000	40000
	41.87	4300	4710	7310	36	42	28300	31900	21300	21300	40000	38300	40000	40000
	47.93	4300	4710	7310	31	35	30000	33800	23300	23300	40000	38300	40000	40000
	56.55	4300	4710	7310	30	28	32300	36300	25700	25700	40000	38300	40000	40000
	62.55	4300	4710	7310	30	25	33800	37800	27300	27300	40000	38300	40000	40000
	70.54	4300	4710	7310	31	21	35600	38700	29200	29200	40000	38300	40000	40000
	77.89	4300	4710	7310	32	18	37100	38700	30900	30900	40000	38300	40000	40000
	86.52	4300	4710	7310	32	16	38800	38700	32700	32700	40000	38300	40000	40000
	96.80	4300	4710	7310	33	13	40000	38700	34700	34700	40000	38300	40000	40000
	105.13	4300	4710	7310	33	12	40000	38700	36300	36300	40000	38300	40000	40000
	123.93	4300	4710	7310	33	9.3	40000	38700	39500	39500	40000	38300	40000	40000
	140.28	4300	4710	7310	34	5.9	40000	38700	40000	40000	40000	38300	40000	40000
	153.21	4300	4710	7310	34	5.2	40000	38700	40000	40000	40000	38300	40000	40000
	176.05	4300	4710	7310	34	4.0	40000	38700	40000	40000	40000	38300	40000	40000

33 039 00 07

K97..

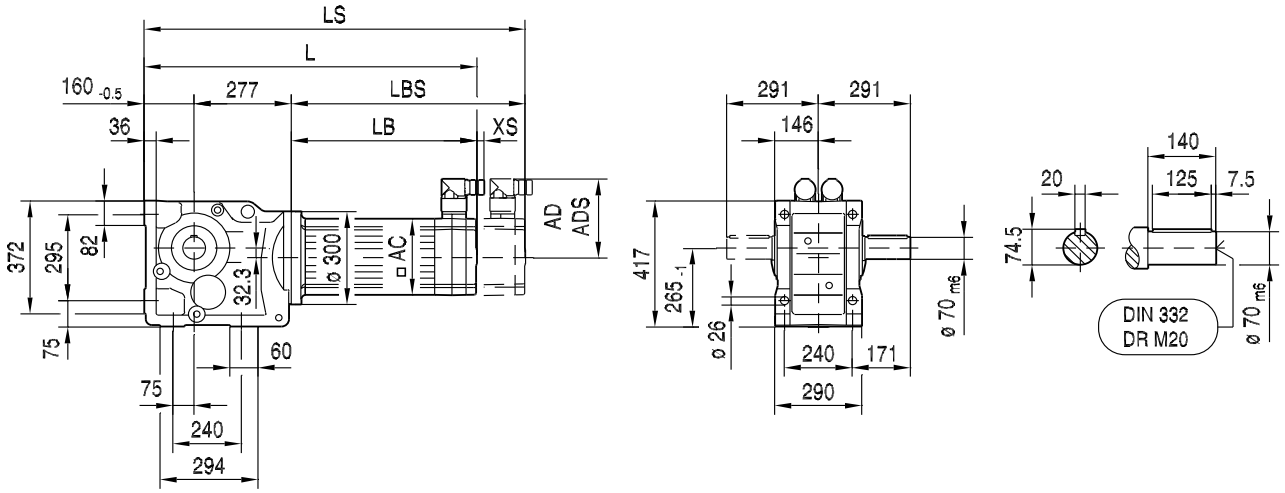

KA97B..

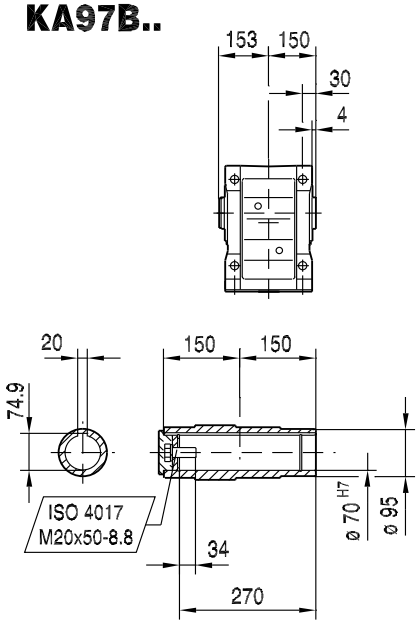

KH97B..

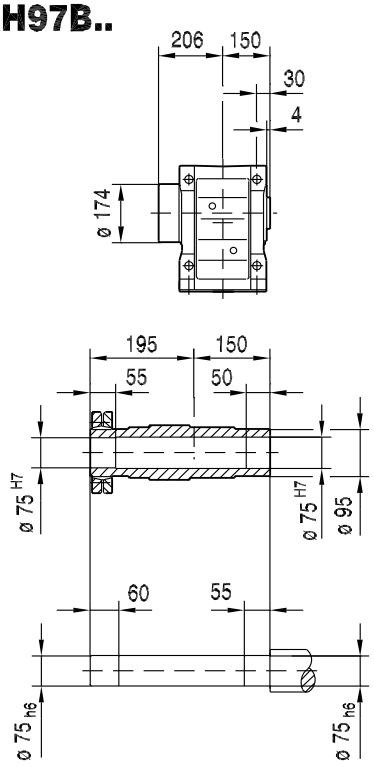

KV97B..

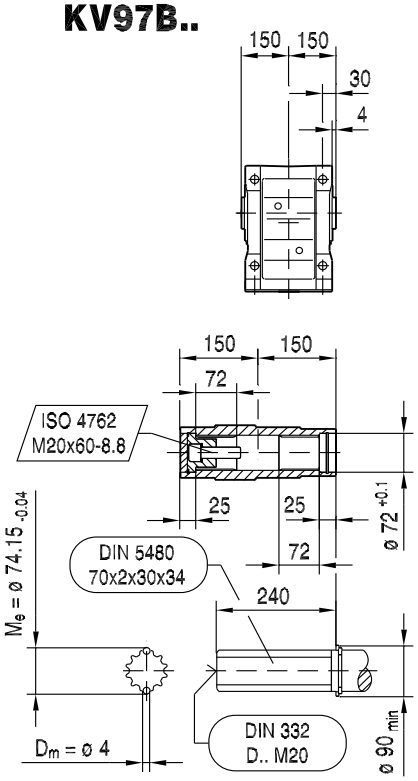

(→ 144)	CMP80S	CMP80M	CMP80L	CMP100S	CMP100M	CMP100L		
AC	137	137	137	162	162	162		
AD	134	134	134	146	146	146		
ADS	137	137	137	147	147	147		
L	624	658	726	657	697	777		
LS	702	736	804	753	793	873		
LB	187	221	289	220	260	340		
LBS	265	299	367	316	356	436		
XS	37	37	37	37	37	37		

33 040 00 07

KF97..

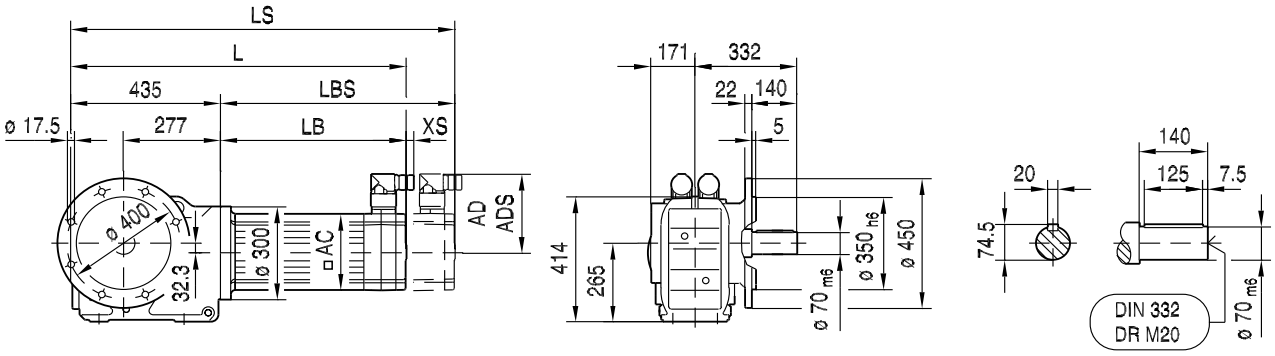

10

KAF97..

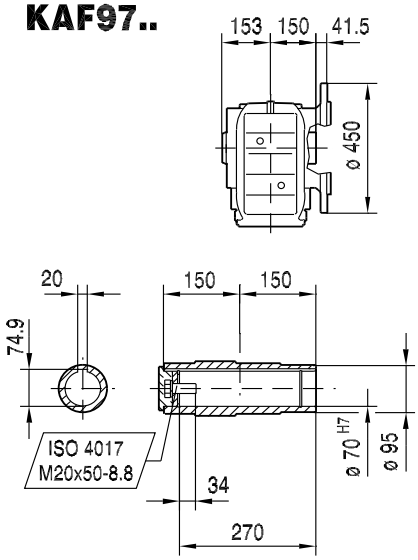

KHF97..

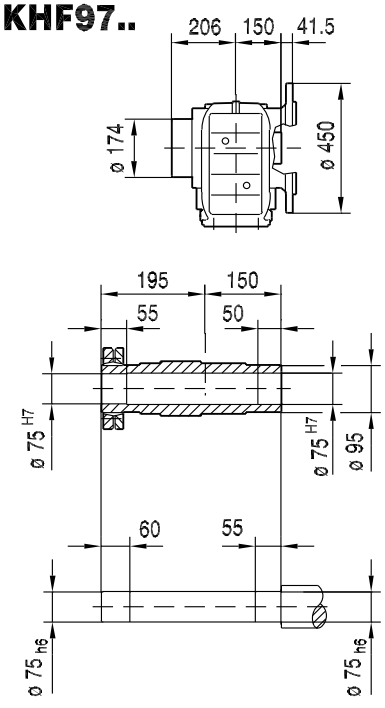

KVF97..

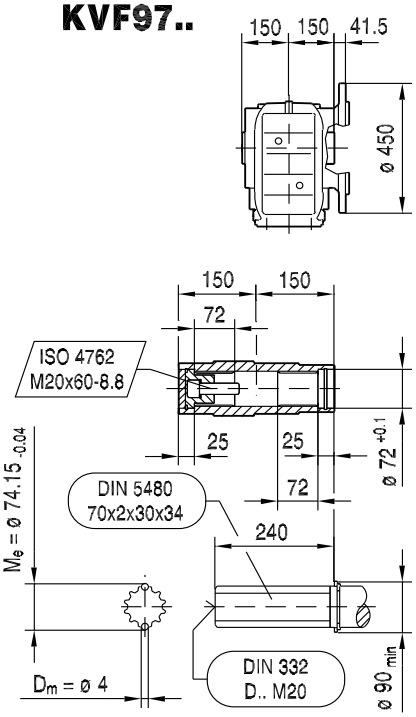

(→ 144)	CMP80S	CMP80M	CMP80L	CMP100S	CMP100M	CMP100L		
AC	137	137	137	162	162	162		
AD	134	134	134	146	146	146		
ADS	137	137	137	147	147	147		
L	622	656	724	655	695	775		
LS	700	734	802	751	791	871		
LB	187	221	289	220	260	340		
LBS	265	299	367	316	356	436		
XS	37	37	37	37	37	37		

KA97..

33 041 00 07

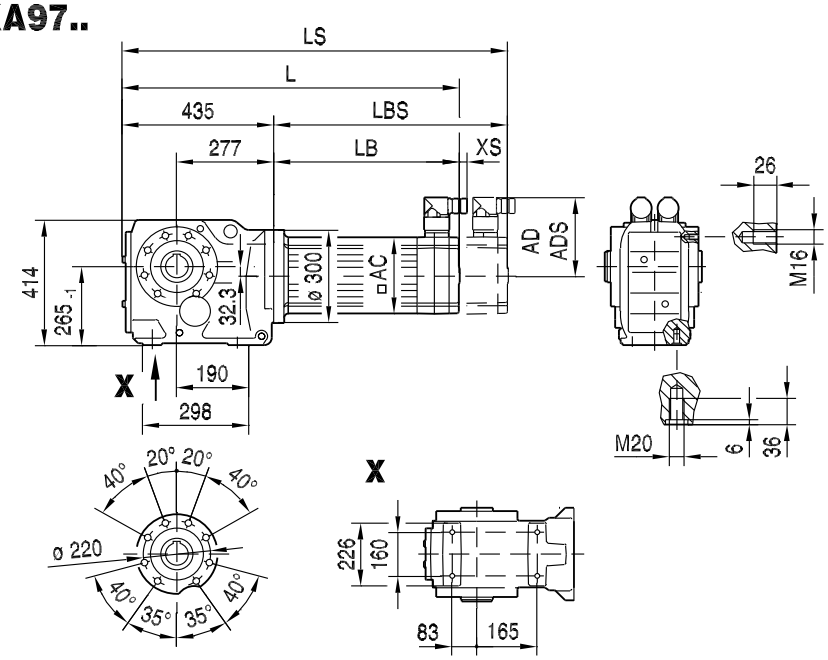

K../T..

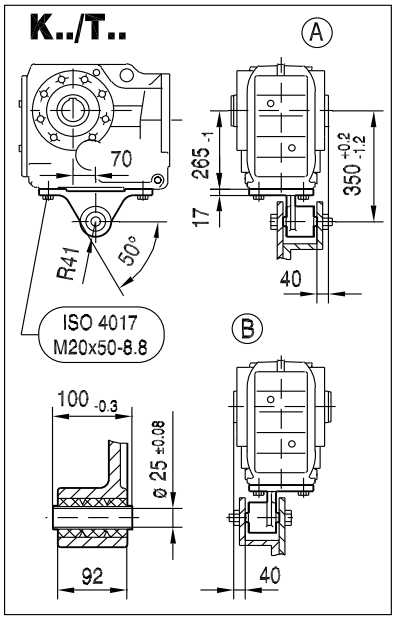

KA97..

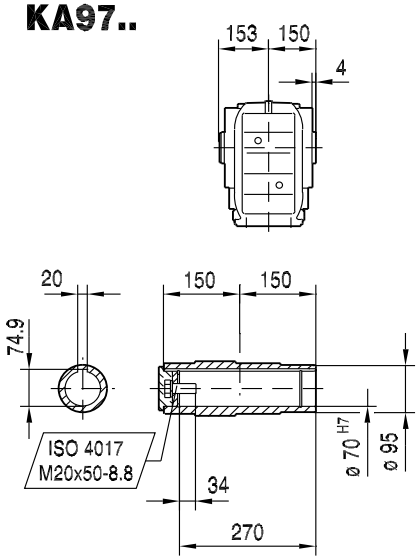

KH97..

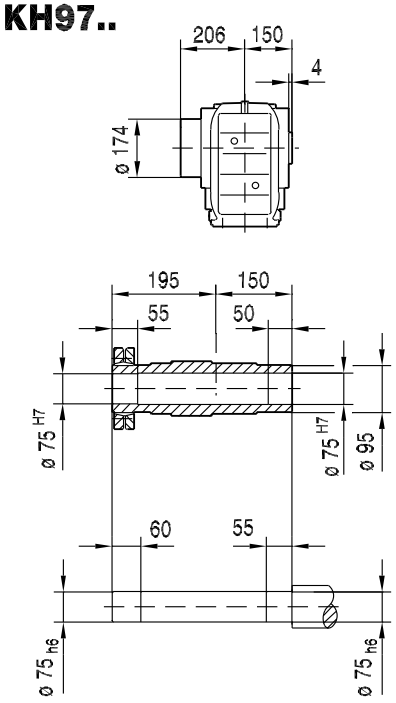

KV97..

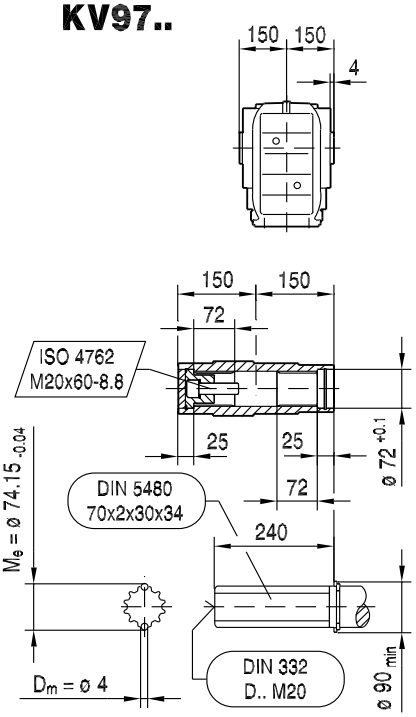

(→ 144)	CMP80S	CMP80M	CMP80L	CMP100S	CMP100M	CMP100L		
AC	137	137	137	162	162	162		
AD	134	134	134	146	146	146		
ADS	137	137	137	147	147	147		
L	622	656	724	655	695	775		
LS	700	734	802	751	791	871		
LB	187	221	289	220	260	340		
LBS	265	299	367	316	356	436		
XS	37	37	37	37	37	37		

KAZ97..

33 042 00 07

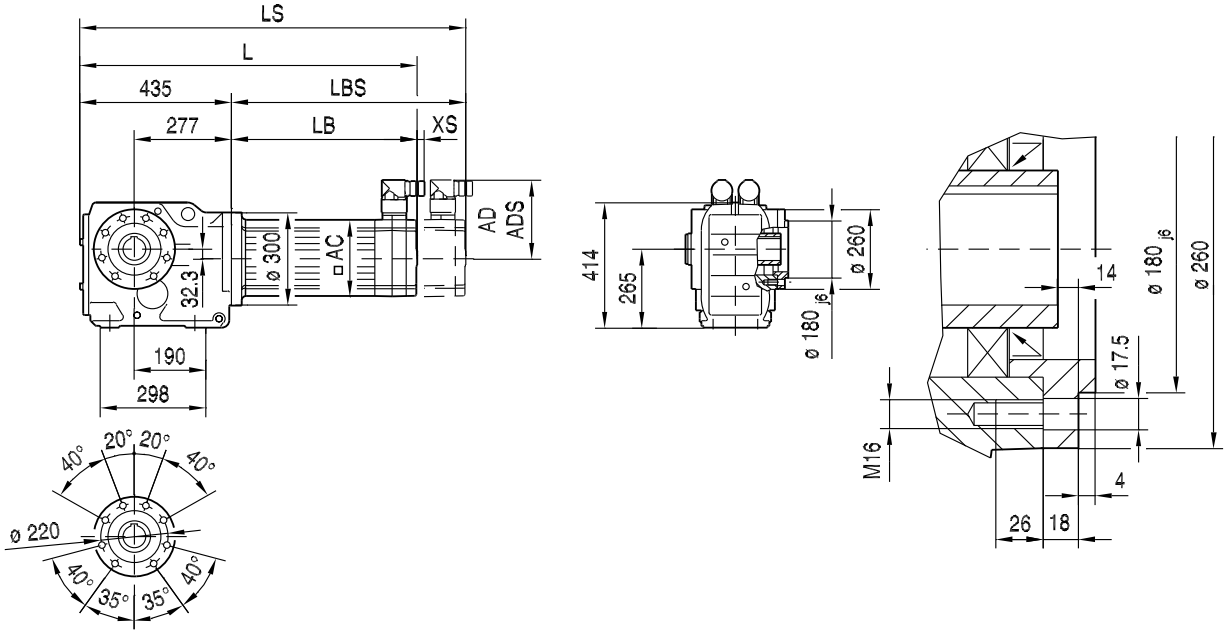

10

KAZ97..

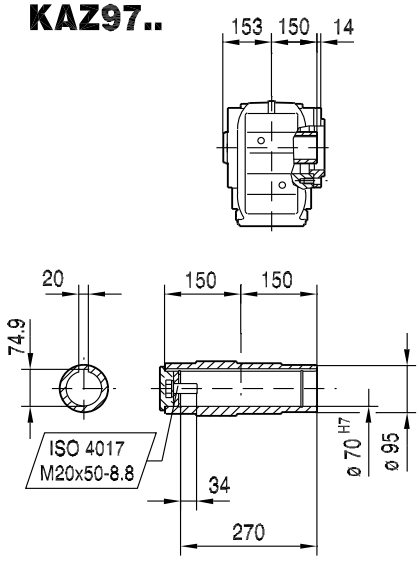

KHZ97..

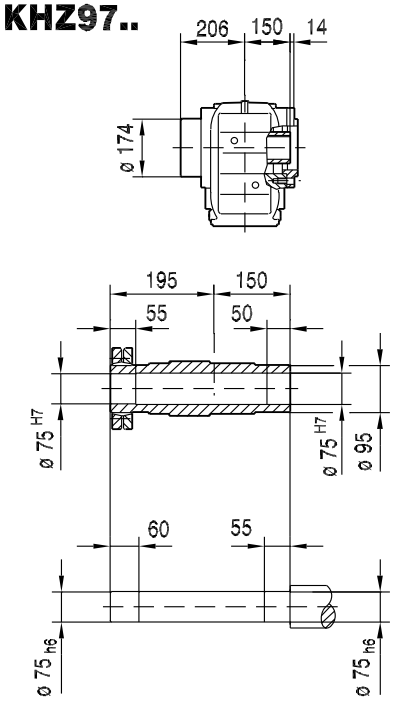

KVZ97..

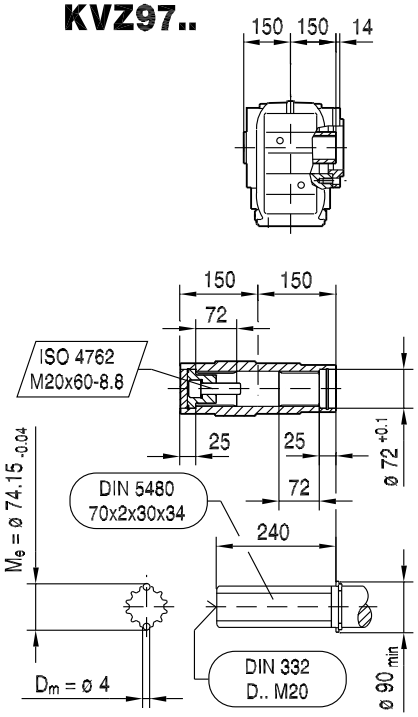

(→ 144)	CMP80S	CMP80M	CMP80L	CMP100S	CMP100M	CMP100L		
AC	137	137	137	162	162	162		
AD	134	134	134	146	146	146		
ADS	137	137	137	147	147	147		
L	622	656	724	655	695	775		
LS	700	734	802	751	791	871		
LB	187	221	289	220	260	340		
LBS	265	299	367	316	356	436		
XS	37	37	37	37	37	37		

KT97..

33 043 00 07

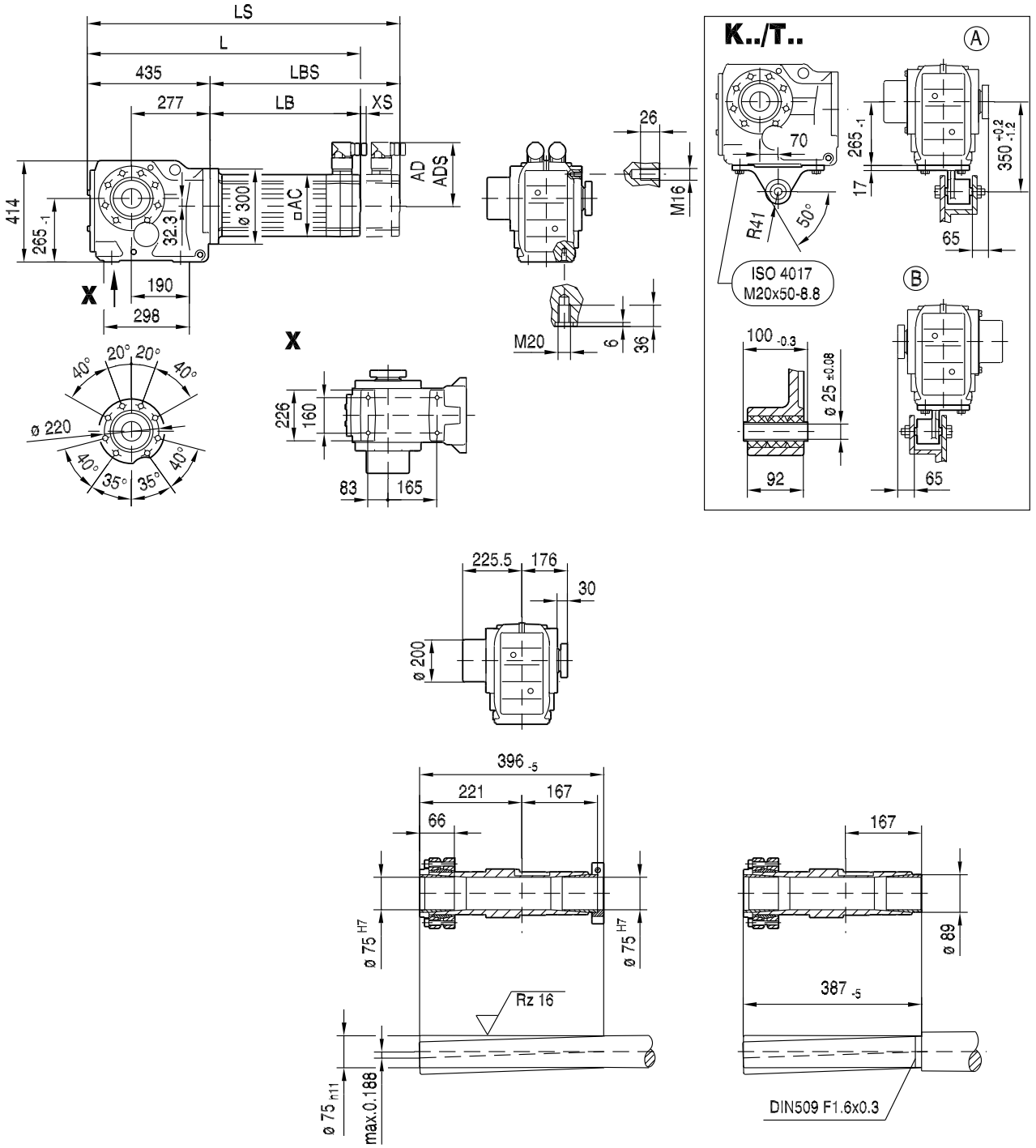

(→ 144)	CMP80S	CMP80M	CMP80L	CMP100S	CMP100M	CMP100L		
AC	137	137	137	162	162	162		
AD	134	134	134	146	146	146		
ADS	137	137	137	147	147	147		
L	622	656	724	655	695	775		
LS	700	734	802	751	791	871		
LB	187	221	289	220	260	340		
LBS	265	299	367	316	356	436		
XS	37	37	37	37	37	37		

10.2.8 K 107

M_{aDyn} [Nm]		CMP		
	i	100S	100M	100L
K107 3	7.35		760	1260
	8.69	565	900	1490
	9.94	650	1030	1700
	11.73	765	1210	2010
	13.43	880	1390	2300
	14.64	950	1510	2510
	16.75	1090	1730	2870
	19.74	1290	2040	3380
	22.62	1480	2340	3880
	26.32	1720	2720	4510
	29.00	1900	3000	4970
	31.28		3170	5250
	32.69	2140	3380	5610
	37.00	2370	3750	6210
	42.33	2710	4290	7110
	49.90	3200	5060	8380
	57.17	3670	5800	>9090
	66.52	4270	6750	>9090
	73.30	4700	7440	>9090
	82.61	5300	8380	>9090
	90.96	5830	>9090	>9090
	100.75	6460	>9090	>9090
	112.41	7210	>9090	>9090
	121.46	7790		
	143.47	>9090		

→ 📖 144

m [kg]		CMP		
	s	100S	100M	100L
K107	3	285	290	300
KF: + 12.1 kg / KA: + -27.2 kg / KAF: + -3.2 kg				

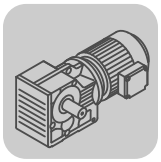

K..CMP
K..[mm]

CMP..				c_{TG}				φ
	i	n_{epk} [1/min]	η [%]	K [Nm/']	KF [Nm/']	KA [Nm/']	KAF [Nm/']	/R [']
K107 3	7.35	3197	96	519	488	862	862	9
	8.69	3597	96	519	488	862	862	9
	9.94	4500	96	519	488	862	862	9
	11.73	4500	96	519	488	862	862	9
	13.43	4500	96	519	488	862	862	9
	14.64	4500	96	661	612	1341	1341	7
	16.75	4500	96	661	612	1341	1341	7
	19.74	4500	96	661	612	1341	1341	6
	22.62	4500	96	661	612	1341	1341	6
	26.32	4500	96	661	612	1341	1341	6
	29.00	4500	96	661	612	1341	1341	6
	31.28	3197	94	730	670	1660	1660	6
	32.69	4500	96	661	612	1341	1341	6
	37.00	3597	94	730	670	1660	1660	6
	42.33	3924	94	730	670	1660	1660	6
	49.90	4378	94	730	670	1660	1660	6
	57.17	4500	94	730	670	1660	1660	6
	66.52	4500	94	730	670	1660	1660	6
	73.30	4500	94	730	670	1660	1660	6
	82.61	4500	94	730	670	1660	1660	6
	90.96	4500	94	730	670	1660	1660	6
	100.75	4500	94	730	670	1660	1660	6
	112.41	4500	94	730	670	1660	1660	6
	121.46	4500	94	730	670	1660	1660	6
	143.47	4500	94	730	670	1660	1660	6

CMP..							F_{Ramax}				F_{Rapk}			
n_e = 1400	i	M_{amax} [Nm]	M_{apk} [Nm]	$M_{aNotaus}$ [Nm]	n_{ak} [1/min]	J_G 10^{-4} [kgm²]	K [N]	KF [N]	KA [N]	KAF [N]	K [N]	KF [N]	KA [N]	KAF [N]
K107 3	7.35	3600	4720	6120	286	231	24400	28500	9900	47100	65000	65000	65000	65000
	8.69	4070	4780	6919	207	170	24600	29100	9270	48300	65000	65000	65000	65000
	9.94	4190	4840	7123	201	136	25800	30500	10000	50500	65000	65000	65000	65000
	11.73	4300	4910	7310	196	104	27500	32300	11100	53500	65000	65000	65000	65000
	13.43	4300	4940	7310	201	82	29200	34200	12600	56500	65000	65000	65000	65000
	14.64	6890	8060	11713	123	163	19500	23000	6180	51700	65000	65000	65000	65000
	16.75	7050	8160	11985	119	131	21000	24800	7080	54200	65000	65000	65000	65000
	19.74	7200	8270	12240	117	100	23200	27300	8440	57700	65000	65000	65000	65000
	22.62	7200	8320	12240	124	80	25800	30300	10100	61200	65000	65000	65000	65000
	26.32	7200	8370	12240	129	63	28800	33600	12100	65000	65000	65000	65000	65000
	29.00	7200	8400	12240	134	54	30700	35800	13400	65000	65000	65000	65000	65000
	31.28	6800	9090	11560	48	112	34200	39700	16100	65000	65000	65000	65000	65000
	32.69	7200	8430	12240	138	45	33200	38600	15100	65000	65000	65000	65000	65000
	37.00	7200	9090	12240	41	86	35800	41500	17000	65000	65000	65000	65000	65000
	42.33	7360	9090	12512	38	72	37900	44000	18400	65000	65000	65000	65000	65000
	49.90	7840	9090	13328	30	58	39300	45600	19200	65000	65000	65000	65000	65000
	57.17	8000	9090	13600	30	48	41700	48400	20900	65000	65000	65000	65000	65000
	66.52	8000	9090	13600	30	40	45400	52500	23600	65000	65000	65000	65000	65000
	73.30	8000	9090	13600	30	35	47900	55300	25400	65000	65000	65000	65000	65000
	82.61	8000	9090	13600	30	29	50900	58700	27700	65000	65000	65000	65000	65000
	90.96	8000	9090	13600	31	25	53500	61600	29600	65000	65000	65000	65000	65000
	100.75	8000	9090	13600	32	20	56200	64700	31700	65000	65000	65000	65000	65000
	112.41	8000	9090	13600	32	17	59300	65000	34000	65000	65000	65000	65000	65000
	121.46	8000	9090	13600	32	15	61500	65000	35700	65000	65000	65000	65000	65000
	143.47	8000	9090	13600	32	12	65000	65000	39600	65000	65000	65000	65000	65000

33 044 00 07

K107..

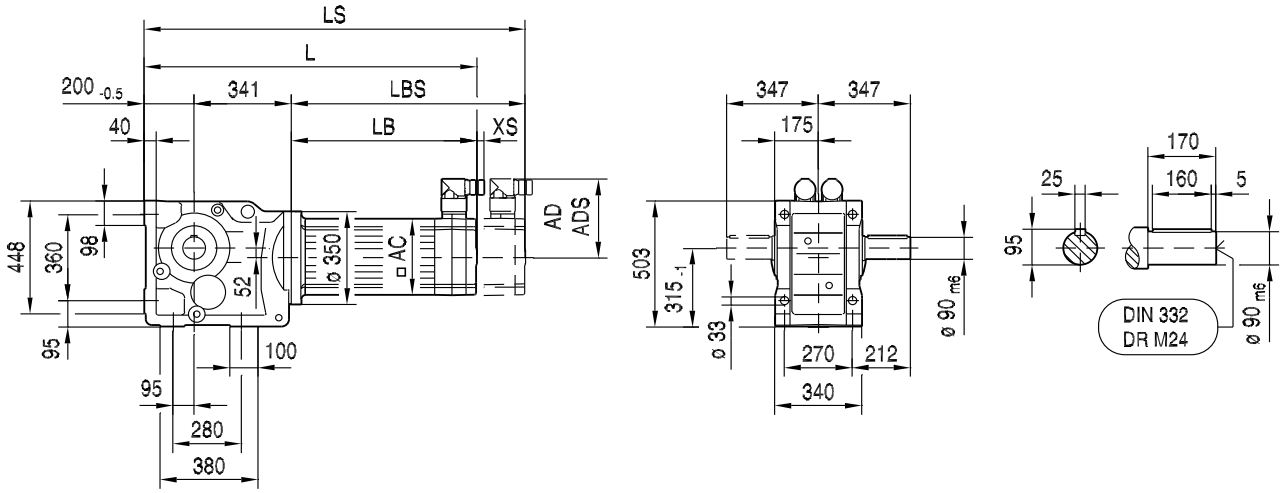

KA107B..

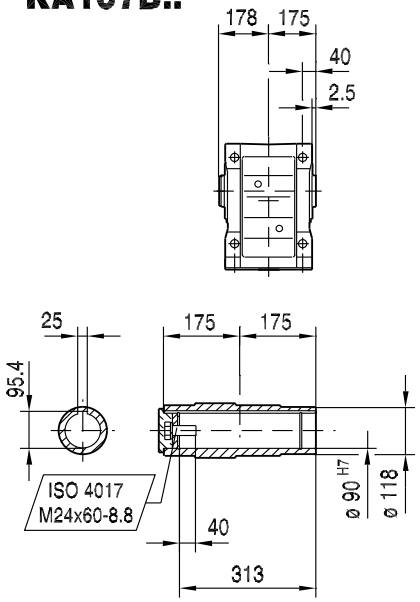

KH107B..

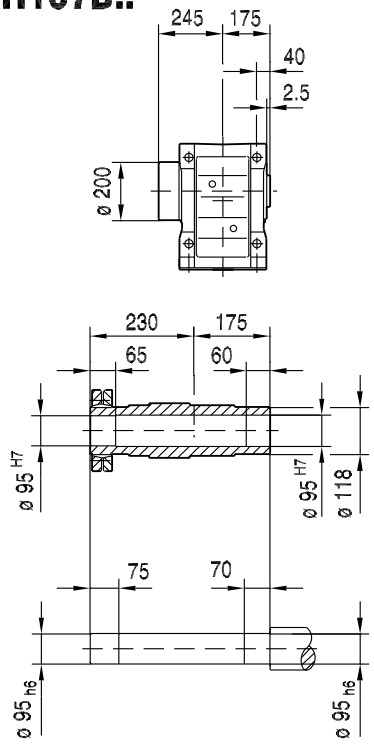

KV107B..

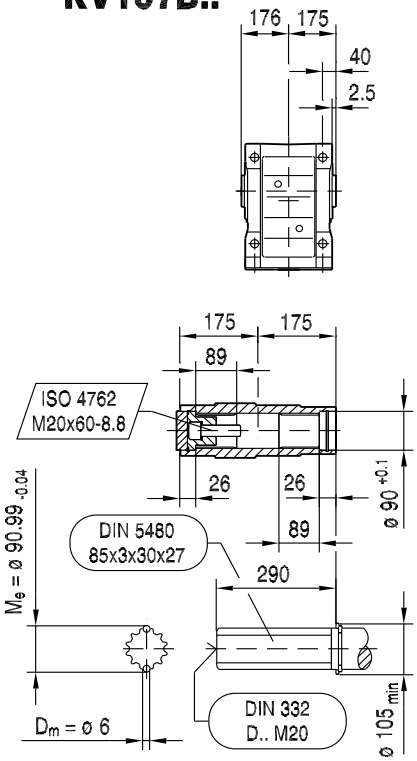

(→ 144)	CMP80L	CMP100S	CMP100M	CMP100L				
AC	0	162	162	162				
AD	0	146	146	146				
ADS	0	147	147	147				
L	541	755	795	875				
LS	541	851	891	971				
LB	0	214	254	334				
LBS	0	310	350	430				
XS	0	37	37	37				

KF107..

33 045 00 07

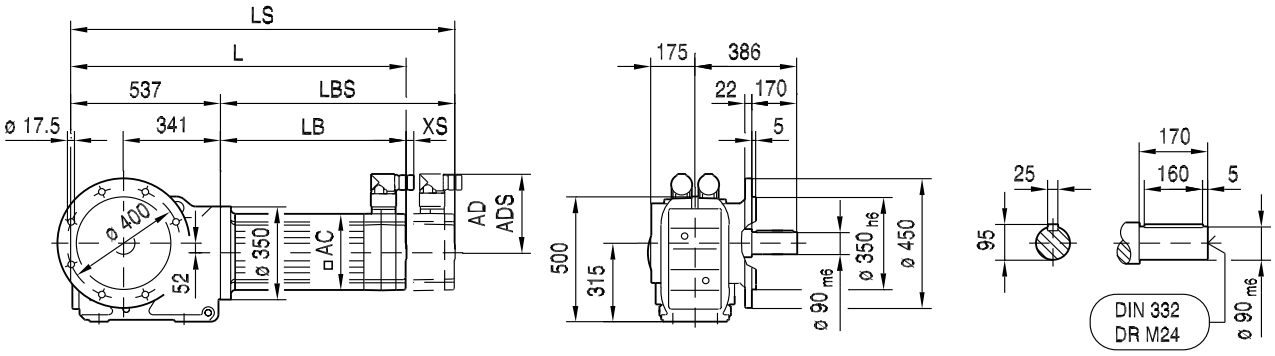

KAF107..

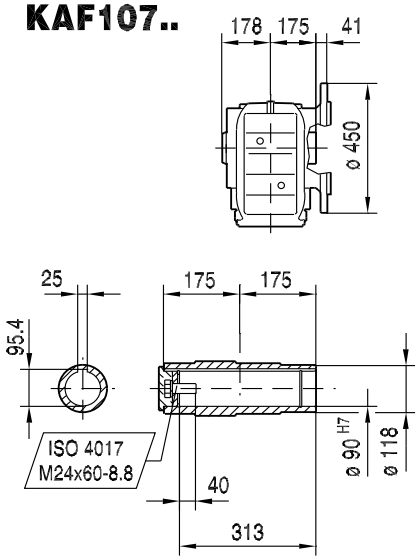

KHF107..

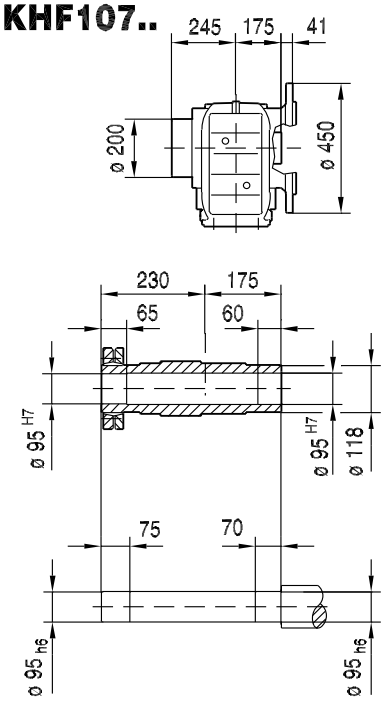

KVF107..

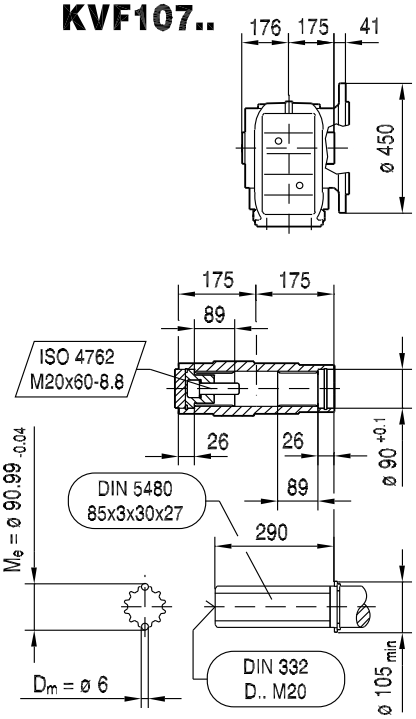

(→ 📖 144)	CMP80L	CMP100S	CMP100M	CMP100L				
AC	0	162	162	162				
AD	0	146	146	146				
ADS	0	147	147	147				
L	537	751	791	871				
LS	537	847	887	967				
LB	0	214	254	334				
LBS	0	310	350	430				
XS	0	37	37	37				

33 046 00 07

KA107..

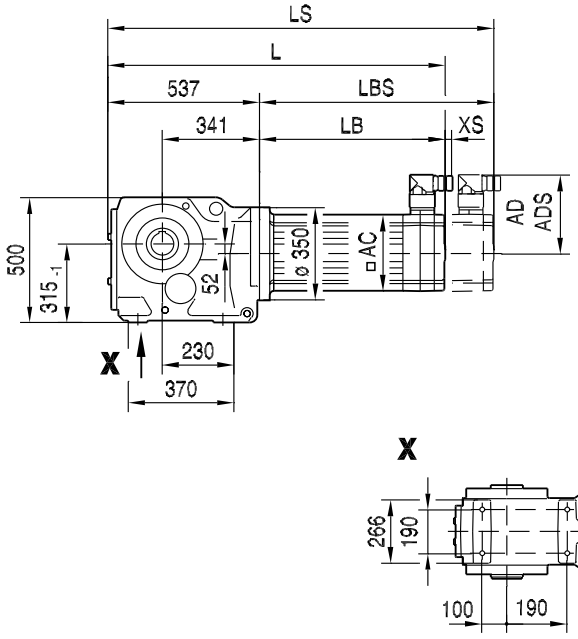

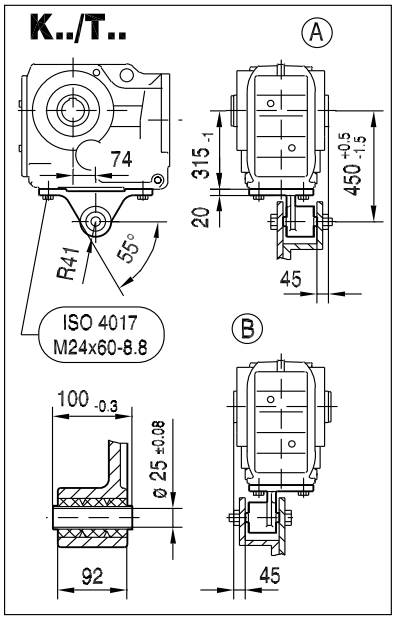

10

KA107..

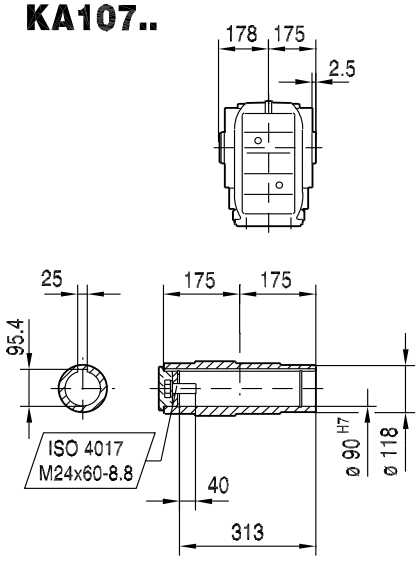

KH107..

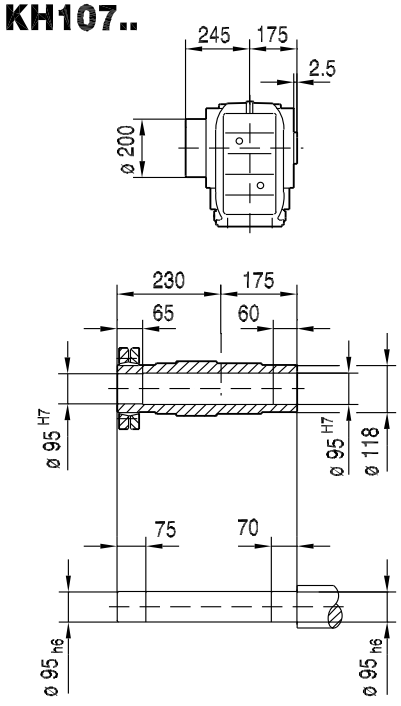

KV107..

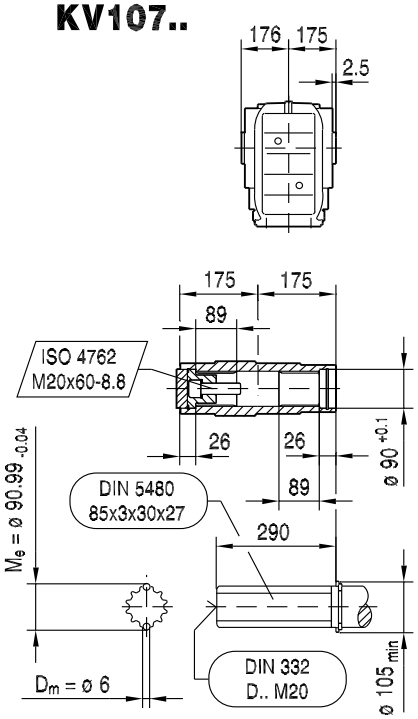

(→ 144)	CMP80L	CMP100S	CMP100M	CMP100L				
AC	0	162	162	162				
AD	0	146	146	146				
ADS	0	147	147	147				
L	537	751	791	871				
LS	537	847	887	967				
LB	0	214	254	334				
LBS	0	310	350	430				
XS	0	37	37	37				

33 047 00 07

KAZ107..

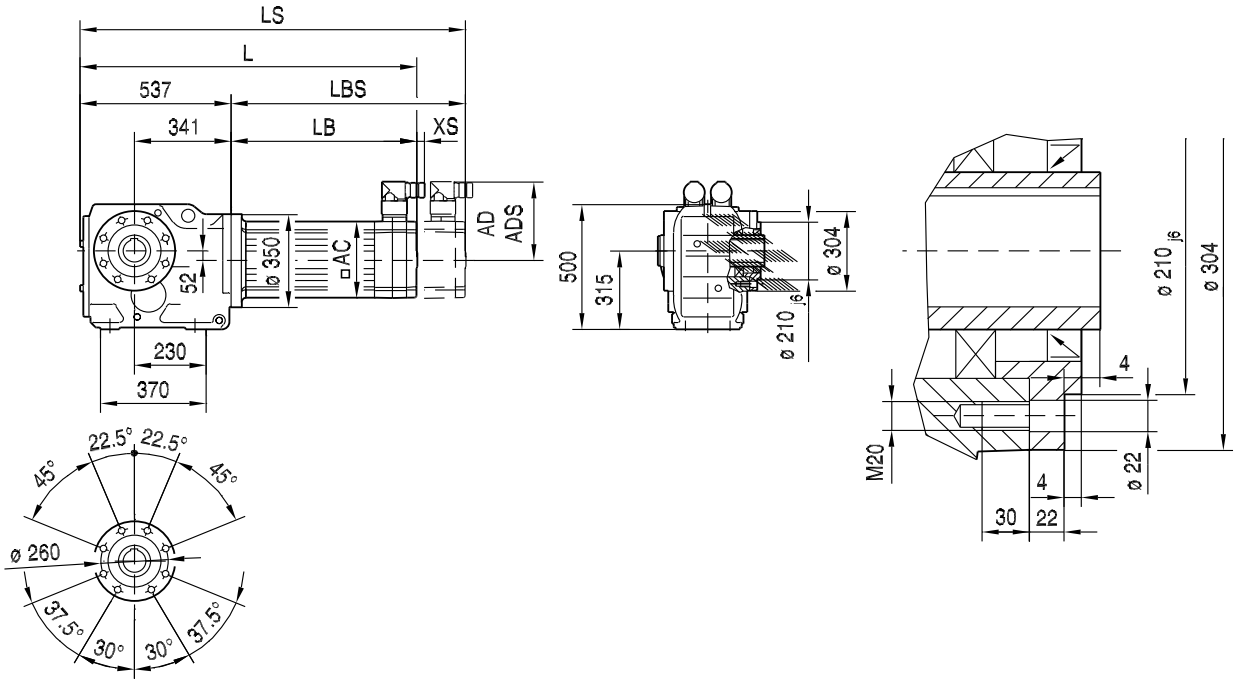

KAZ107..

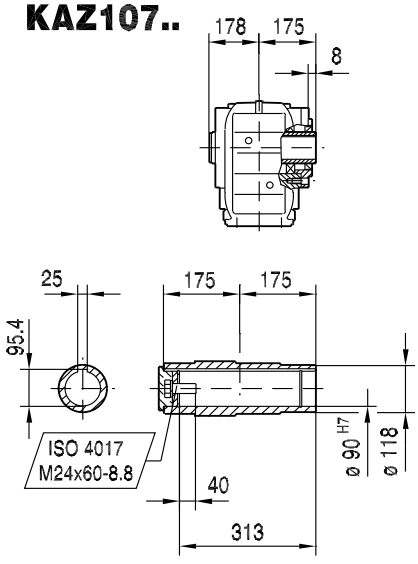

KHZ107..

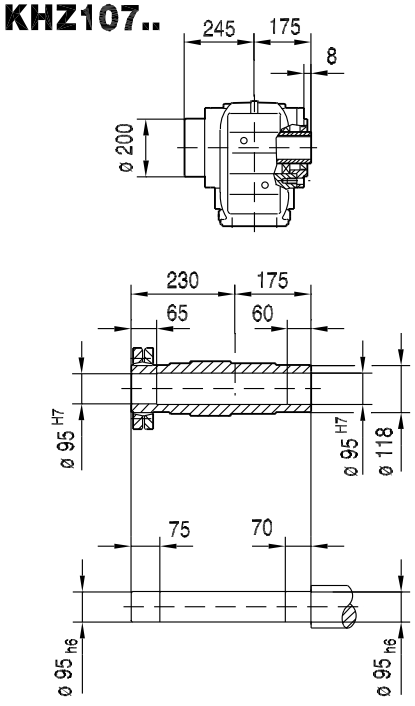

KVZ107..

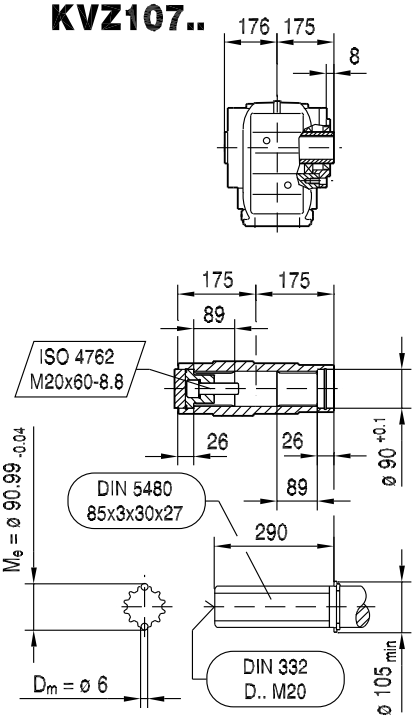

(→ 📖 144)	CMP80L	CMP100S	CMP100M	CMP100L				
AC	0	162	162	162				
AD	0	146	146	146				
ADS	0	147	147	147				
L	537	751	791	871				
LS	537	847	887	967				
LB	0	214	254	334				
LBS	0	310	350	430				
XS	0	37	37	37				

KT107..

33 048 00 07

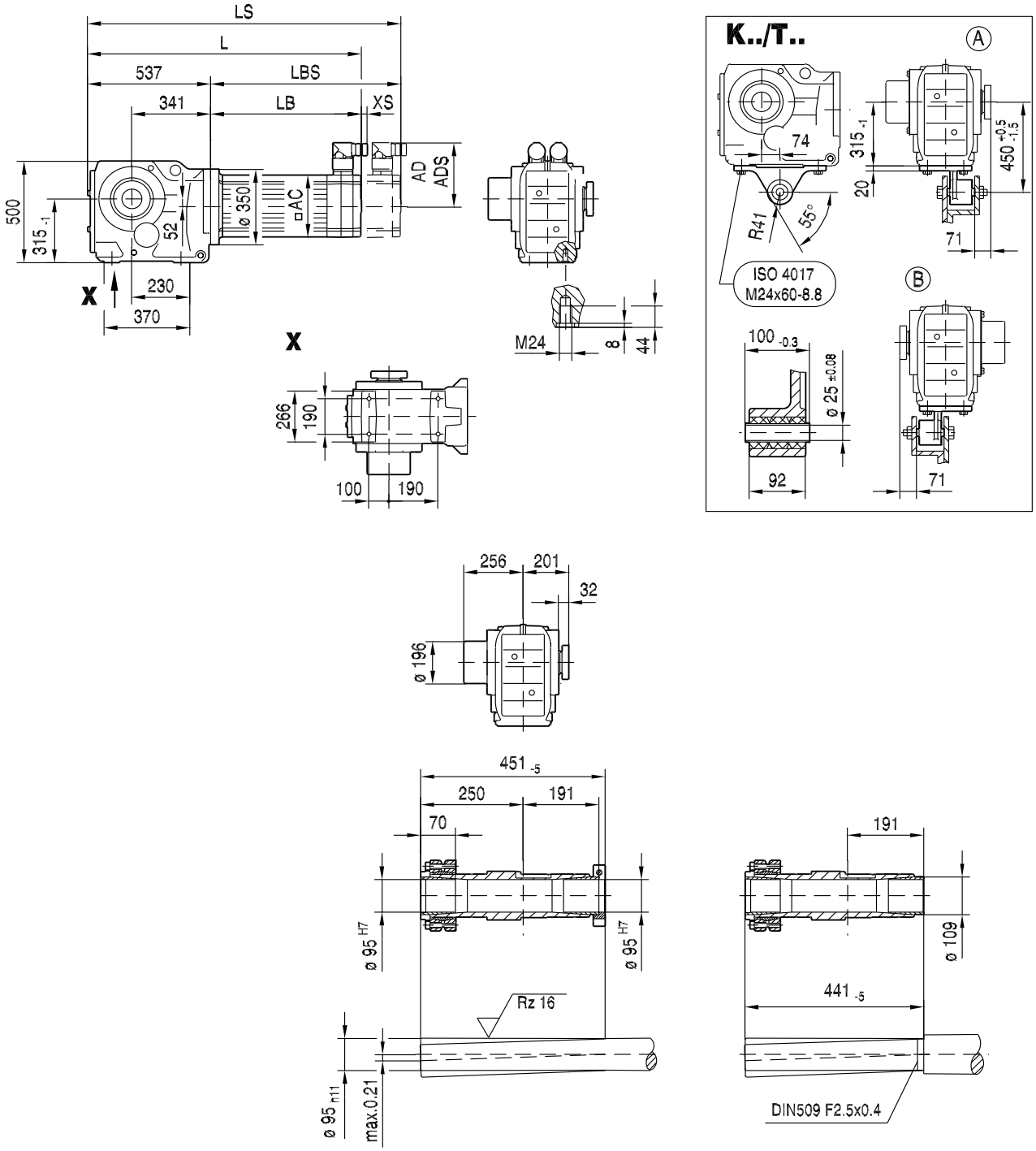

(→ 144)	CMP80L	CMP100S	CMP100M	CMP100L				
AC	0	162	162	162				
AD	0	146	146	146				
ADS	0	147	147	147				
L	537	751	791	871				
LS	537	847	887	967				
LB	0	214	254	334				
LBS	0	310	350	430				
XS	0	37	37	37				

11 S..CMP

11.1 S, SF, SAF, SHF, SA../T, SH, SAZ, SHZ..CMP

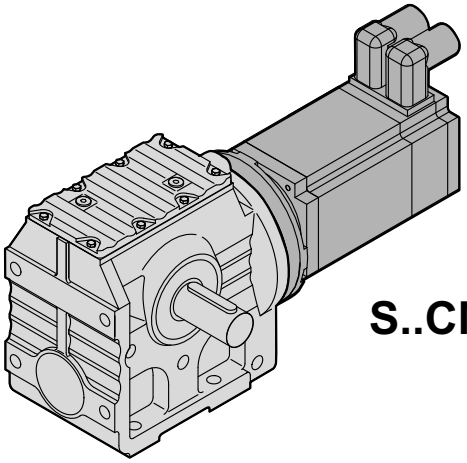

S..CMP..

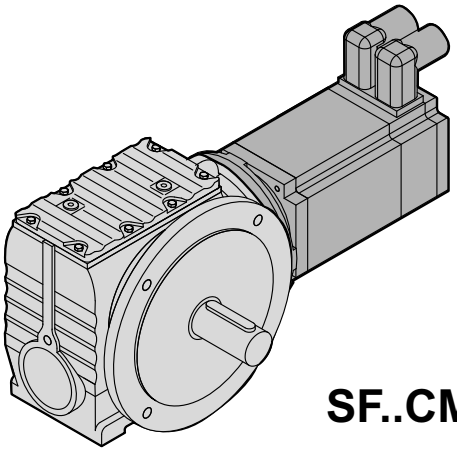

SF..CMP..

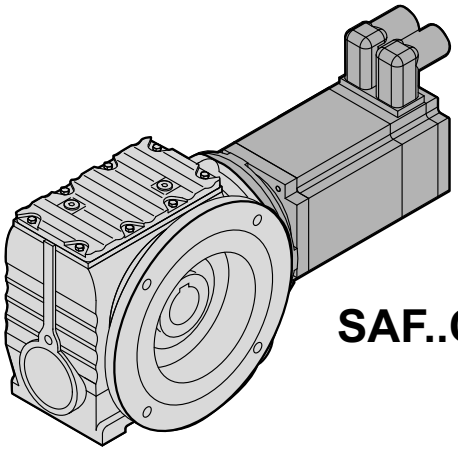

SAF..CMP..

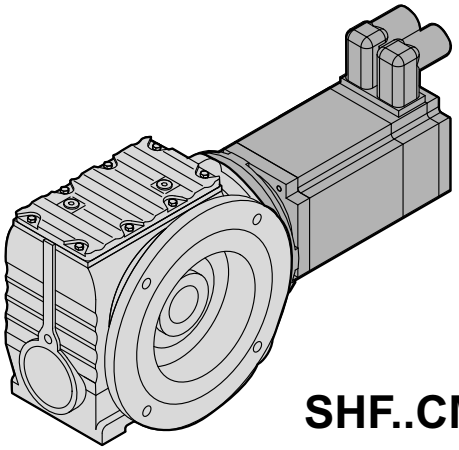

SHF..CMP..

65965axx

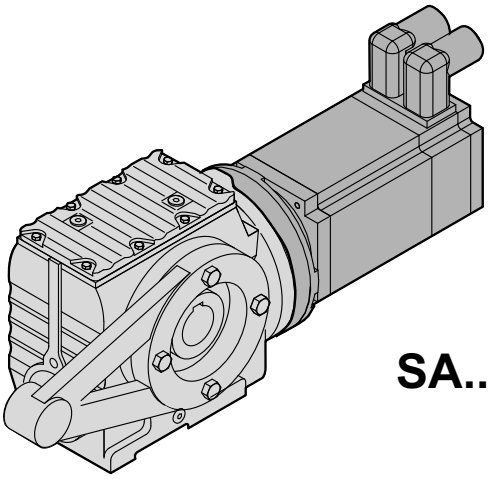

SA../T CMP..

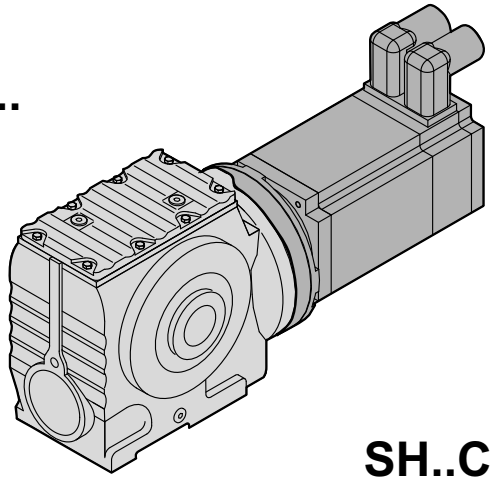

SH..CMP..

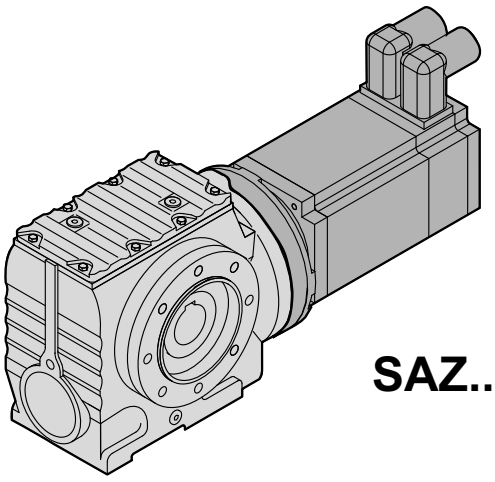

SAZ..CMP..

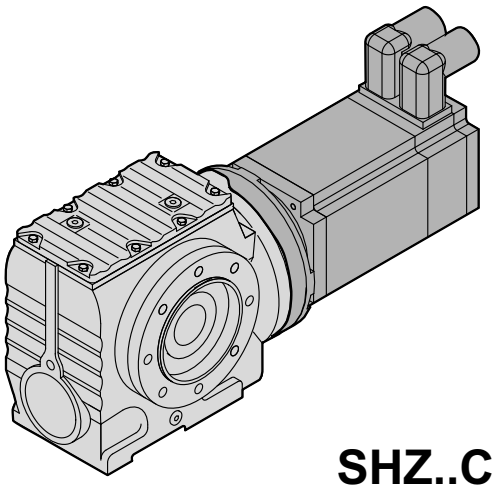

SHZ..CMP..

65966axx

11.2 S..[mm]

11.2.1 S 37

M_{aDyn} [Nm]		CMP					
	i	50S	50M	50L	63S	63M	71S
S37 2	3.97	18	36	>48	39	>48	>48
	4.86	22	44	>49	47	>49	>49
	5.38	25	49	>51	>51	>51	>51
	6.33	29	>52	>52	>52	>52	>52
	6.80	31	>60	>60	>60	>60	>60
	8.00	36	>61	>61	>61	>61	>61
	9.02	40	>62	>62	>62	>62	>62
	10.23	46	>63	>63	>63	>63	>63
	10.91	49	>64	>64	>64	>64	>64
	12.48	55	>64	>64	>64	>64	>64
	13.39	59	>65	>65	>65	>65	>65
	15.53	>66	>66		>66		
	18.24	>67					
	19.13	78	>93	>93	>93	>93	>93
	19.89	>68					
	22.50	90	>95	>95	>95	>95	>95
	25.38	>96	>96	>96	>96	>96	>96
	28.76	>97	>97	>97	>97	>97	>97
	30.68	>98	>98	>98	>98	>98	>98
	35.10	>99	>99	>99	>99	>99	>99
	37.66	>100	>100	>100	>100	>100	>100
	43.68	>101	>101		>101		
	51.30	>103					
	55.93	>104					

→ 144

m [kg]		CMP					
	s	50S	50M	50L	63S	63M	71S
S37	2	9.7	11	12	12	13	15
SF: + 1.3 kg / SA: + -0.3 kg / SAF: + 1.3 kg							

CMP..	i	n_{epk} [1/min]	η [%]	c_{TG} S [Nm/°]	SF [Nm/°]	SA [Nm/°]	SAF [Nm/°]
S37 2	3.97	4500	88	-	-	-	-
	4.86	4500	88	-	-	-	-
	5.38	4500	88	-	-	-	-
	6.33	4500	87	-	-	-	-
	6.80	4500	87	-	-	-	-
	8.00	4500	86	-	-	-	-
	9.02	4500	86	-	-	-	-
	10.23	4500	86	-	-	-	-
	10.91	4500	86	-	-	-	-
	12.48	4500	85	-	-	-	-
	13.39	4500	85	-	-	-	-
	15.53	4500	84	-	-	-	-
	18.24	4500	84	-	-	-	-
	19.13	4500	78	-	-	-	-
	19.89	4500	84	-	-	-	-
	22.50	4500	77	-	-	-	-
	25.38	4500	76	-	-	-	-
	28.76	4500	76	-	-	-	-
	30.68	4500	76	-	-	-	-
	35.10	4500	75	-	-	-	-
	37.66	4500	75	-	-	-	-
	43.68	4500	74	-	-	-	-
	51.30	4500	73	-	-	-	-
	55.93	4500	73	-	-	-	-

CMP..							F_{Ramax}				F_{Rapk}			
n_e = 1400	i	M_{amax} [Nm]	M_{apk} [Nm]	$M_{aNotaus}$ [Nm]	n_{ak} [1/min]	J_G 10^{-4} [kgm^2]	S [N]	SF [N]	SA [N]	SAF [N]	S [N]	SF [N]	SA [N]	SAF [N]
S37 2	3.97	32	48	72	277	0.92	1400	1570	2010	2010	3000	3000	4000	4000
	4.86	33	49	74	226	0.67	1520	1700	2180	2180	3000	3000	4000	4000
	5.38	34	51	76	204	0.59	1570	1760	2260	2260	3000	3000	4000	4000
	6.33	35	52	78	174	0.44	1670	1870	2400	2400	3000	3000	4000	4000
	6.80	43	60	90	29	0.47	1630	1840	2360	2360	3000	3000	4000	4000
	8.00	45	61	77	25	0.36	1730	1950	2500	2500	3000	3000	4000	4000
	9.02	46	62	78	22	0.30	1810	2040	2610	2610	3000	3000	4000	4000
	10.23	47	63	80	20	0.24	1900	2140	2740	2740	3000	3000	4000	4000
	10.91	48	64	82	18	0.22	1940	2190	2800	2800	3000	3000	4000	4000
	12.48	48	64	82	16	0.18	2060	2320	2970	2970	3000	3000	4000	4000
	13.39	49	65	83	15	0.16	2110	2370	3040	3040	3000	3000	4000	4000
	15.53	50	66	85	13	0.13	2240	2510	3220	3220	3000	3000	4000	4000
	18.24	52	67	88	11	0.10	2380	2660	3410	3410	3000	3000	4000	4000
	19.13	71	93	121	10	0.43	2380	2670	3420	3420	3000	3000	4000	4000
	19.89	52	68	88	10	0.090	2470	2760	3540	3540	3000	3000	4000	4000
	22.50	73	95	124	9	0.32	2530	2840	3630	3630	3000	3000	4000	4000
	25.38	74	96	126	8	0.27	2660	2980	3810	3810	3000	3000	4000	4000
	28.76	75	97	128	7	0.22	2800	3000	4000	4000	3000	3000	4000	4000
	30.68	76	98	129	16	0.20	2860	3000	4000	4000	3000	3000	4000	4000
	35.10	78	99	133	14	0.16	3000	3000	4000	4000	3000	3000	4000	4000
	37.66	79	100	134	13	0.15	3000	3000	4000	4000	3000	3000	4000	4000
	43.68	81	101	138	16	0.12	3000	3000	4000	4000	3000	3000	4000	4000
	51.30	81	103	138	14	0.090	3000	3000	4000	4000	3000	3000	4000	4000
	55.93	81	104	138	13	0.080	3000	3000	4000	4000	3000	3000	4000	4000

02 001 00 07

S37..

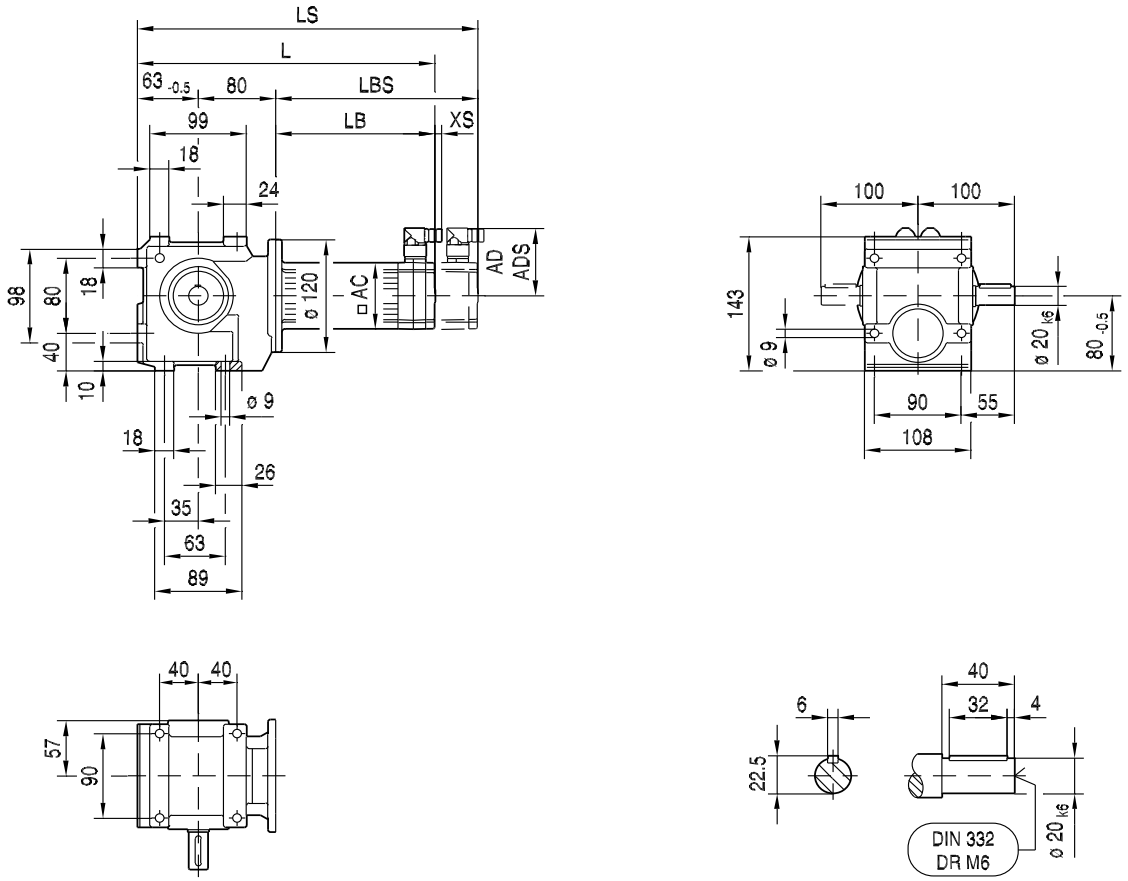

(→ 144)		CMP50S	CMP50M	CMP50L	CMP63S	CMP63M	CMP71S	
AC		73	73	73	88	88	115	
AD		86	86	86	92	92	102	
ADS		86	86	86	92	92	104	
L		288	327	366	323	373	315	
LS		317	356	395	351	401	380	
LB		145	184	223	180	230	172	
LBS		174	213	252	208	258	237	
XS		18	18	18	14	14	11	

SF37..

02 002 00 07

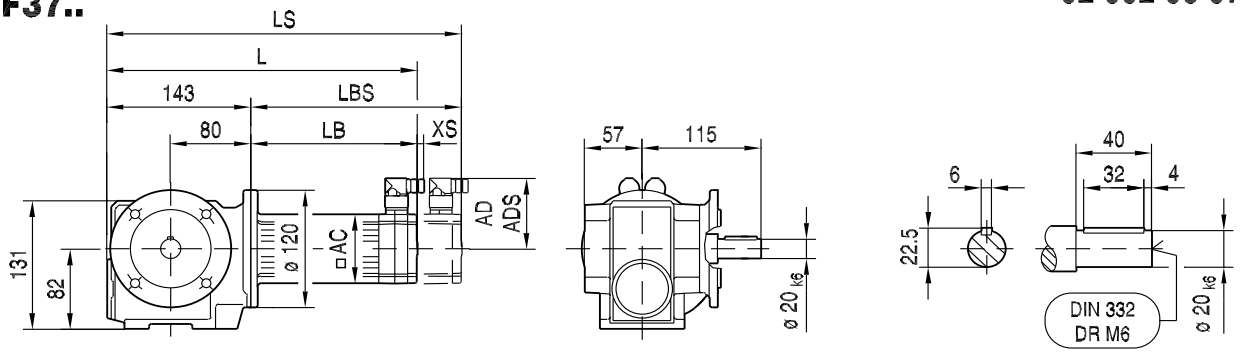

ø 120

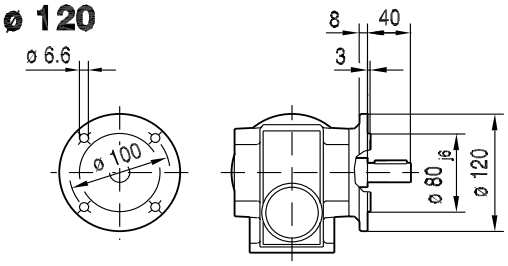

ø 160

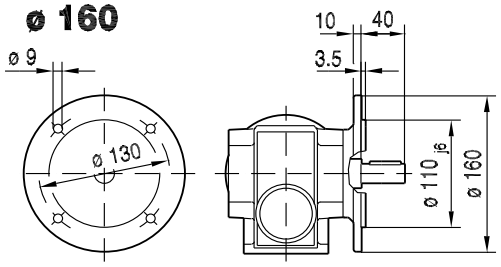

SAF37..

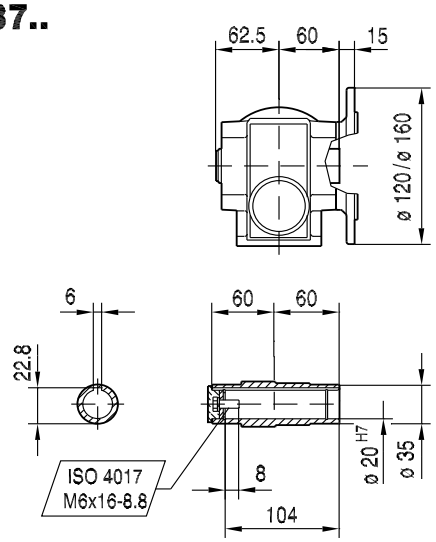

SHF37..

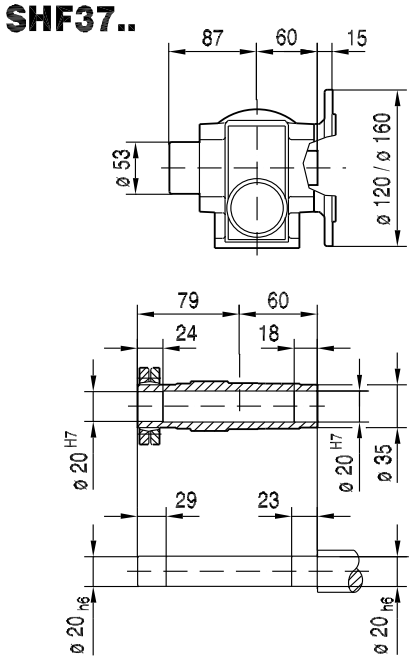

(→ 144)		CMP50S	CMP50M	CMP50L	CMP63S	CMP63M	CMP71S	
AC		73	73	73	88	88	115	
AD		86	86	86	92	92	102	
ADS		86	86	86	92	92	104	
L		288	327	366	323	373	315	
LS		317	356	395	351	401	380	
LB		145	184	223	180	230	172	
LBS		174	213	252	208	258	237	
XS		18	18	18	14	14	11	

02 003 00 07

SA37..

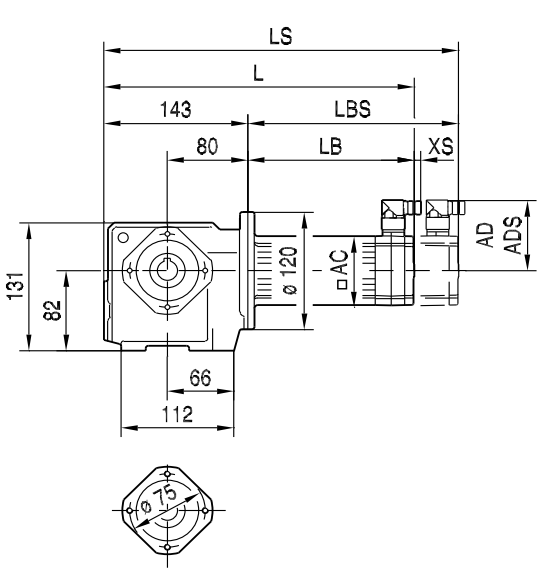

S.. /T..

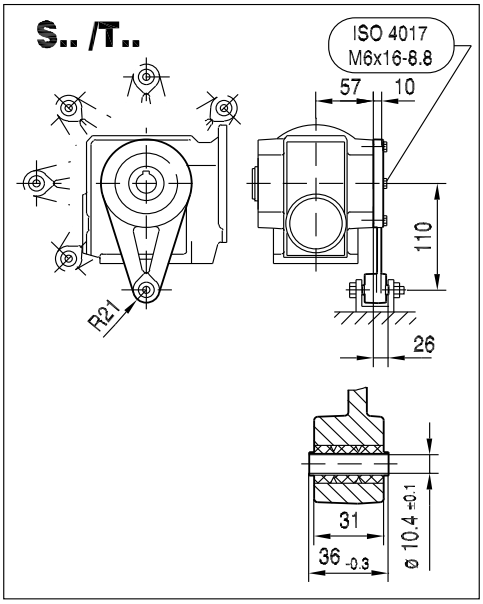

SA37..

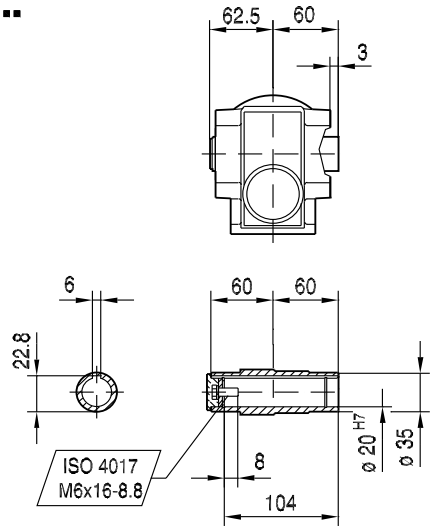

SH37..

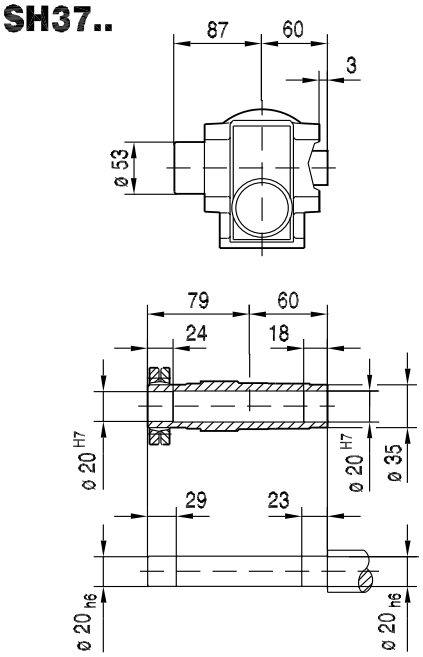

(→ 📖 144)		CMP50S	CMP50M	CMP50L	CMP63S	CMP63M	CMP71S	
AC		73	73	73	88	88	115	
AD		86	86	86	92	92	102	
ADS		86	86	86	92	92	104	
L		288	327	366	323	373	315	
LS		317	356	395	351	401	380	
LB		145	184	223	180	230	172	
LBS		174	213	252	208	258	237	
XS		18	18	18	14	14	11	

02 004 00 07

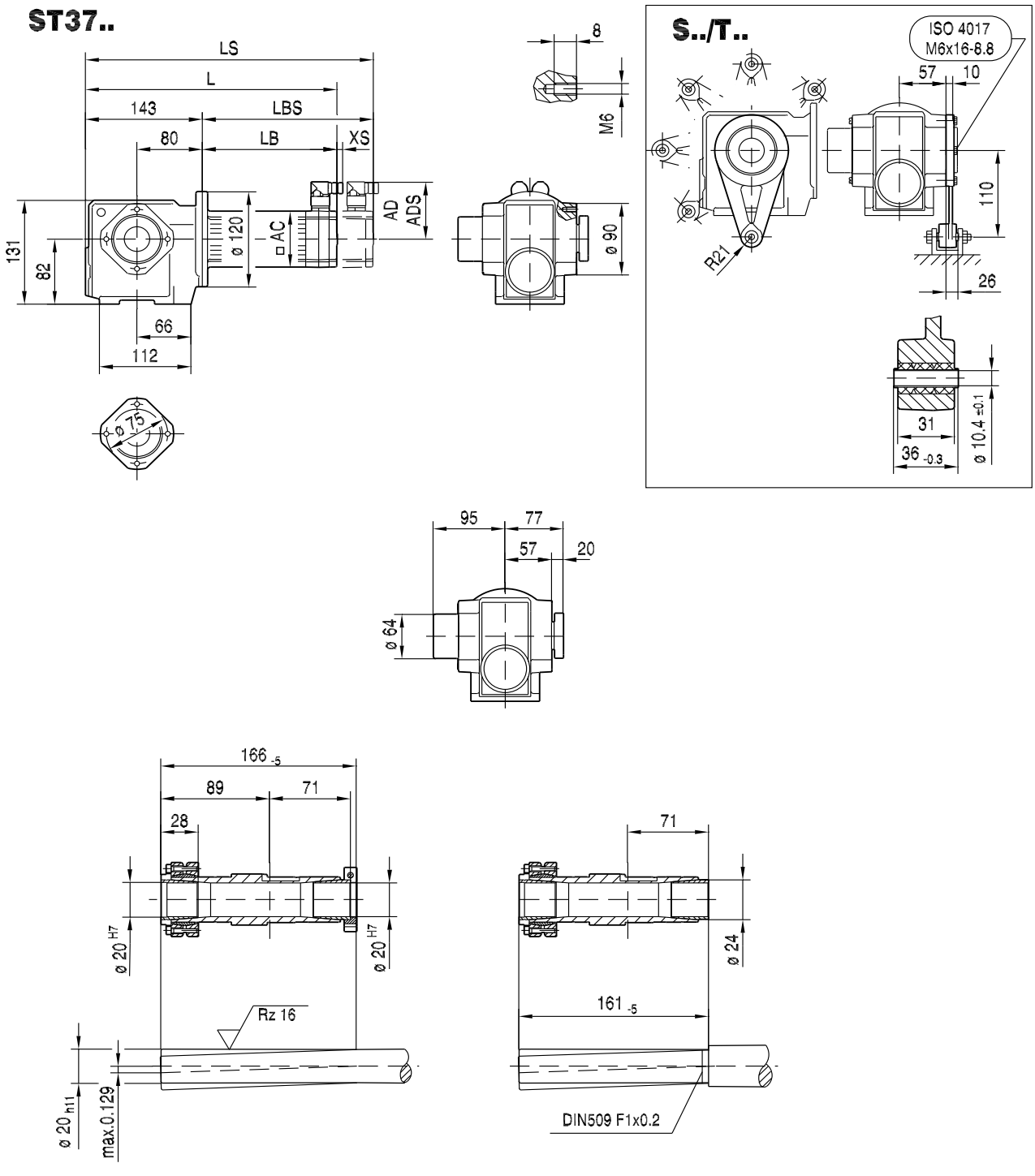

(→ 📖 144)		CMP50S	CMP50M	CMP50L	CMP63S	CMP63M	CMP71S	
AC		73	73	73	88	88	115	
AD		86	86	86	92	92	102	
ADS		86	86	86	92	92	104	
L		288	327	366	323	373	315	
LS		317	356	395	351	401	380	
LB		145	184	223	180	230	172	
LBS		174	213	252	208	258	237	
XS		18	18	18	14	14	11	

11.2.2 S 47

M_{aDyn} [Nm]		CMP							
	i	50S	50M	50L	63S	63M	63L	71S	71M
S47 2	4.00	19	37	55	40	>72	>72	69	>72
	4.76	22	44	66	48	>87	>87	82	>87
	5.39	25	49	74	53	>97	>97	92	>97
	6.40	30	59	88	63	>114	>114	109	>114
	6.83	32	63	94	67	>117	>117	117	>117
	7.28	33	65	98	70	>129	>129	122	>129
	8.64	39	77	116	83	>146	>146	144	>146
	9.23	42	83	124	89	>146	>146	>146	>146
	10.80	49	97	145	104	>145	>145	>145	>145
	12.10	55	108	>145	117	>145	>145	>145	>145
	14.24	64	126	>144	136	>144	>144	>144	>144
	16.47	74	>144	>144	>144	>144		>144	
	17.62	79	>144	>144	>144	>144		>144	
	19.54		159	>184	171	>184	>184	>184	>184
	20.33	90	>143		>143				
	23.20	95	189	>200	>200	>200	>200	>200	>200
	24.77	102	200	>205	>205	>205	>205	>205	>205
	29.00	118	>215	>215	>215	>215	>215	>215	>215
	32.48	130	>215	>215	>215	>215	>215	>215	>215
	38.23	153	>215	>215	>215	>215	>215	>215	>215
	44.22	175	>210	>210	>210	>210		>210	
	47.32	185	>210	>210	>210	>210		>210	
	54.59	>210	>210		>210				
	63.80	>210							
	69.39	>210							

→ 📖 **144**

m [kg]		CMP							
	s	50S	50M	50L	63S	63M	63L	71S	71M
S47	2	13	14	15	15	16	18	18	19
SF: + 3.6 kg / SA: + 1.1 kg / SAF: + 2.8 kg									

CMP..	i	n_{epk} [1/min]	η [%]	c_{TG} S [Nm/°]	SF [Nm/°]	SA [Nm/°]	SAF [Nm/°]
S47 2	4.00	4500	90	-	-	-	-
	4.76	4500	90	-	-	-	-
	5.39	4500	89	-	-	-	-
	6.40	4500	89	-	-	-	-
	6.83	4500	89	-	-	-	-
	7.28	4500	87	-	-	-	-
	8.64	4500	87	-	-	-	-
	9.23	4500	87	-	-	-	-
	10.80	4500	87	-	-	-	-
	12.10	4500	87	-	-	-	-
	14.24	4500	86	-	-	-	-
	16.47	4500	86	-	-	-	-
	17.62	4500	86	-	-	-	-
	19.54	4500	79	-	-	-	-
	20.33	4500	85	-	-	-	-
	23.20	4500	79	-	-	-	-
	24.77	4500	79	-	-	-	-
	29.00	4500	78	-	-	-	-
	32.48	4500	77	-	-	-	-
	38.23	4500	77	-	-	-	-
	44.22	4500	76	-	-	-	-
	47.32	4500	75	-	-	-	-
	54.59	4500	75	-	-	-	-
	63.80	4500	74	-	-	-	-
	69.39	4500	73	-	-	-	-

CMP..							F_{Ramax}				F_{Rapk}			
n_e = 1400	i	M_{amax} [Nm]	M_{apk} [Nm]	$M_{aNotaus}$ [Nm]	n_{ak} [1/min]	J_G 10^{-4} [kgm²]	S [N]	SF [N]	SA [N]	SAF [N]	S [N]	SF [N]	SA [N]	SAF [N]
S47 2	4.00	61	72	108	225	2.5	1980	2420	2740	2740	5660	6140	7000	7000
	4.76	72	87	130	231	1.8	2010	2490	2780	2780	5580	6070	7000	7000
	5.39	74	97	146	204	1.5	2110	2600	2920	2920	5530	6030	7000	7000
	6.40	76	114	171	172	1.1	2260	2780	3120	3120	5440	5940	7000	7000
	6.83	78	117	176	161	1.0	2300	2840	3190	3190	5420	5930	7000	7000
	7.28	103	129	175	27	1.1	2110	2690	2940	2940	5360	5870	7000	7000
	8.64	109	146	185	23	0.83	2230	2840	3110	3110	5260	5780	7000	7000
	9.23	109	146	185	22	0.74	2310	2930	3210	3210	5260	5780	7000	7000
	10.80	109	145	185	19	0.57	2500	3150	3480	3480	5270	5790	7000	7000
	12.10	109	145	185	17	0.47	2650	3310	3670	3670	5270	5790	7000	7000
	14.24	110	144	187	14	0.35	2850	3540	3950	3950	5270	5790	7000	7000
	16.47	110	144	187	12	0.28	3060	3770	4230	4230	5270	5790	7000	7000
	17.62	110	144	187	11	0.26	3160	3880	4360	4360	5270	5790	7000	7000
	19.54	144	184	245	10	0.94	3370	4120	4660	4660	5200	5710	7000	7000
	20.33	110	143	187	10	0.20	3370	4130	4650	4650	5280	5800	7000	7000
	23.20	152	200	258	9	0.72	3570	4360	4940	4940	5110	5620	7000	7000
	24.77	155	205	264	8	0.65	3650	4460	5050	5050	5080	5590	7000	7000
	29.00	155	215	264	7	0.49	3920	4760	5420	5420	5020	5530	7000	7000
	32.48	155	215	264	6	0.41	4120	4990	5690	5690	5020	5530	7000	7000
	38.23	155	215	264	5	0.31	4420	5330	6100	6100	5020	5530	7000	7000
	44.22	155	210	264	5	0.25	4710	5660	6490	6490	5050	5560	7000	7000
	47.32	155	210	264	4	0.23	4850	5810	6680	6680	5050	5560	7000	7000
	54.59	155	210	264	9	0.18	5150	5870	7000	7000	5050	5560	7000	7000
	63.80	155	210	264	8	0.15	5370	5870	7000	7000	5050	5560	7000	7000
	69.39	155	210	264	7	0.13	5370	5870	7000	7000	5050	5560	7000	7000

02 005 01 07

S47..

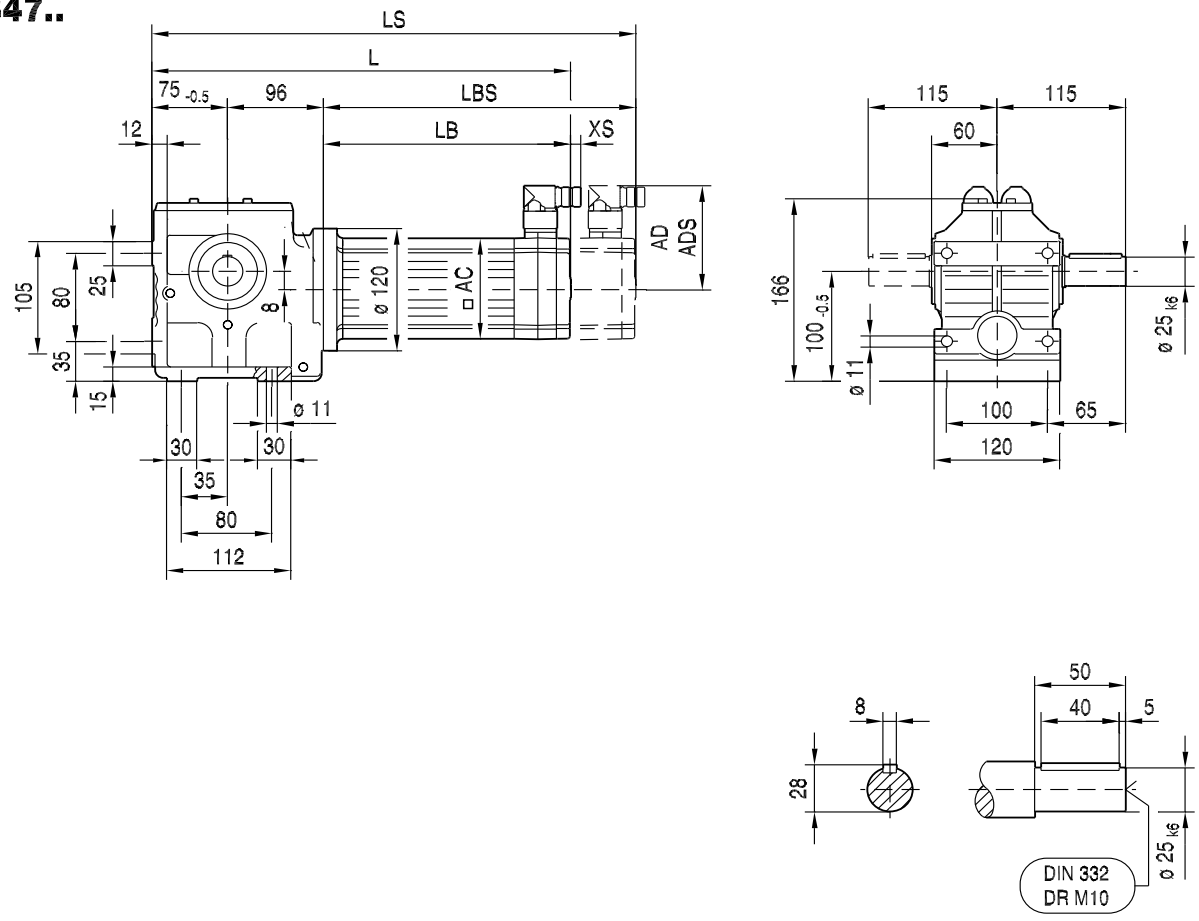

(→ 📖 144)		CMP50S	CMP50M	CMP50L	CMP63S	CMP63M	CMP63L	CMP71S	CMP71M
AC		73	73	73	88	88	88	115	115
AD		86	86	86	92	92	92	102	102
ADS		86	86	86	92	92	92	104	104
L		316	355	394	351	401	454	343	371
LS		345	384	423	379	429	483	408	436
LB		145	184	223	180	230	283	172	200
LBS		174	213	252	208	258	312	237	265
XS		18	18	18	14	14	14	11	11

02 006 01 07

SF47..

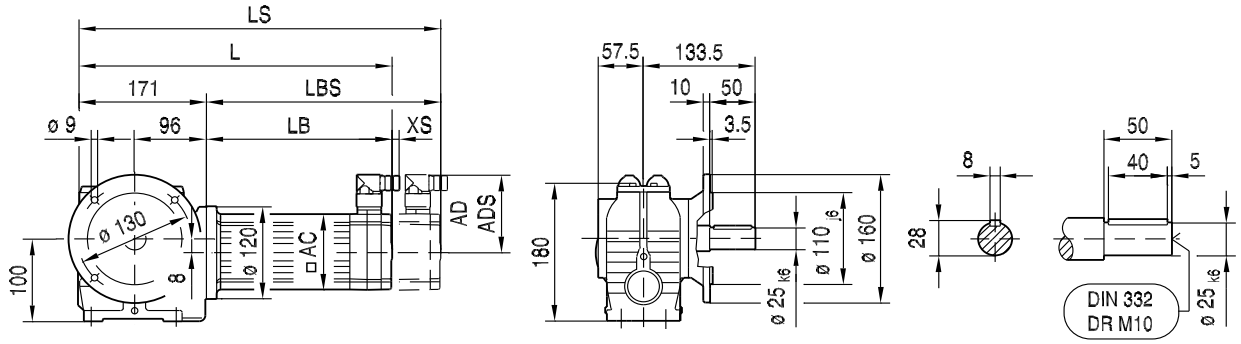

SAF47..

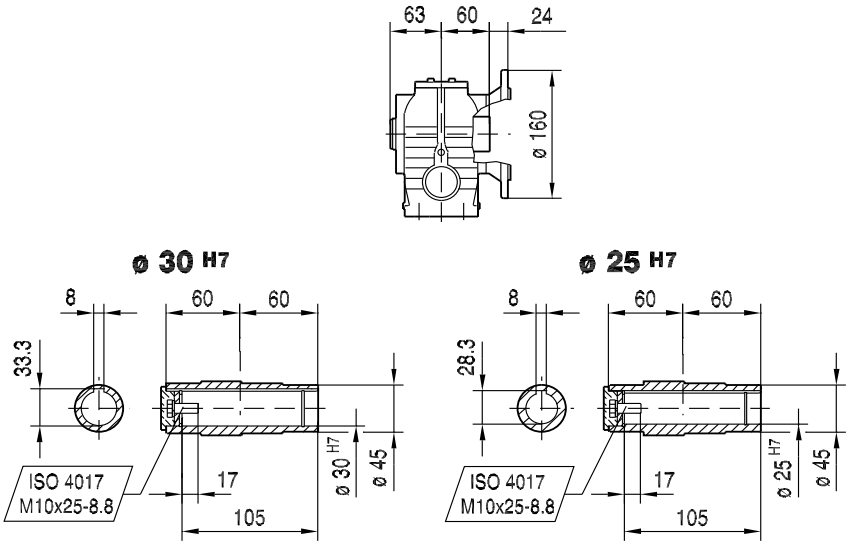

SHF47..

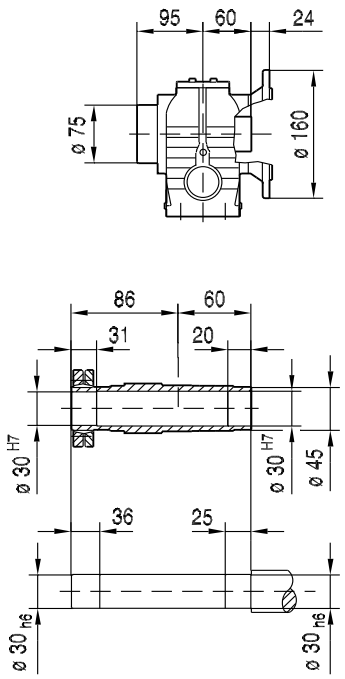

(→ 144)		CMP50S	CMP50M	CMP50L	CMP63S	CMP63M	CMP63L	CMP71S	CMP71M
AC		73	73	73	88	88	88	115	115
AD		86	86	86	92	92	92	102	102
ADS		86	86	86	92	92	92	104	104
L		316	355	394	351	401	454	343	371
LS		345	384	423	379	429	483	408	436
LB		145	184	223	180	230	283	172	200
LBS		174	213	252	208	258	312	237	265
XS		18	18	18	14	14	14	11	11

02 007 01 07

SA47..

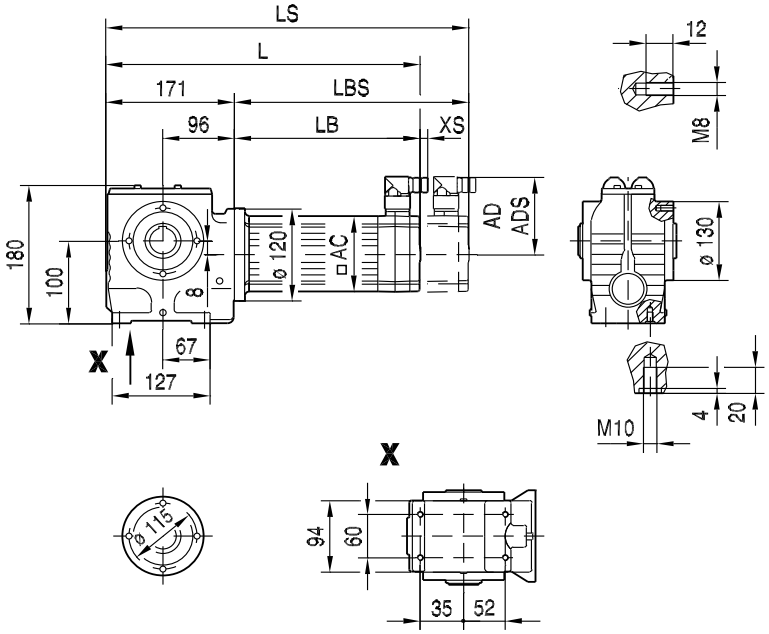

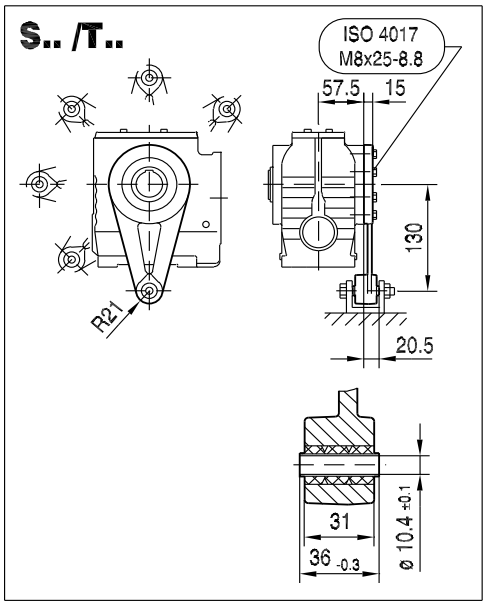

SA47..

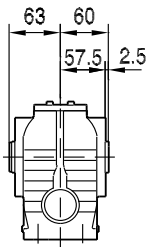

SH47..

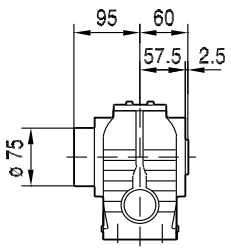

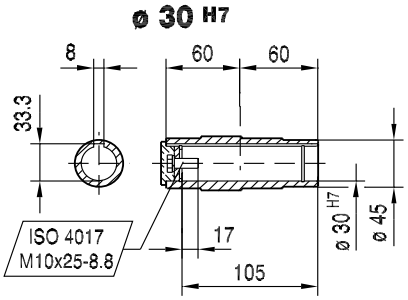

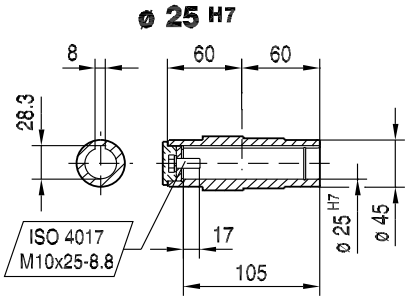

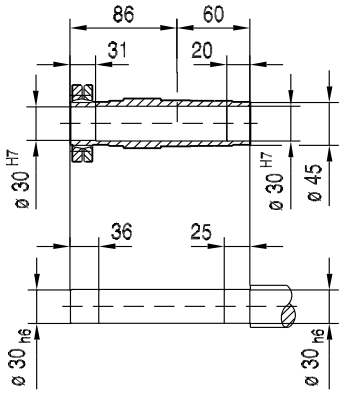

(→ 📖 144)		CMP50S	CMP50M	CMP50L	CMP63S	CMP63M	CMP63L	CMP71S	CMP71M
AC		73	73	73	88	88	88	115	115
AD		86	86	86	92	92	92	102	102
ADS		86	86	86	92	92	92	104	104
L		316	355	394	351	401	454	343	371
LS		345	384	423	379	429	483	408	436
LB		145	184	223	180	230	283	172	200
LBS		174	213	252	208	258	312	237	265
XS		18	18	18	14	14	14	11	11

02 008 01 07

SAZ47..

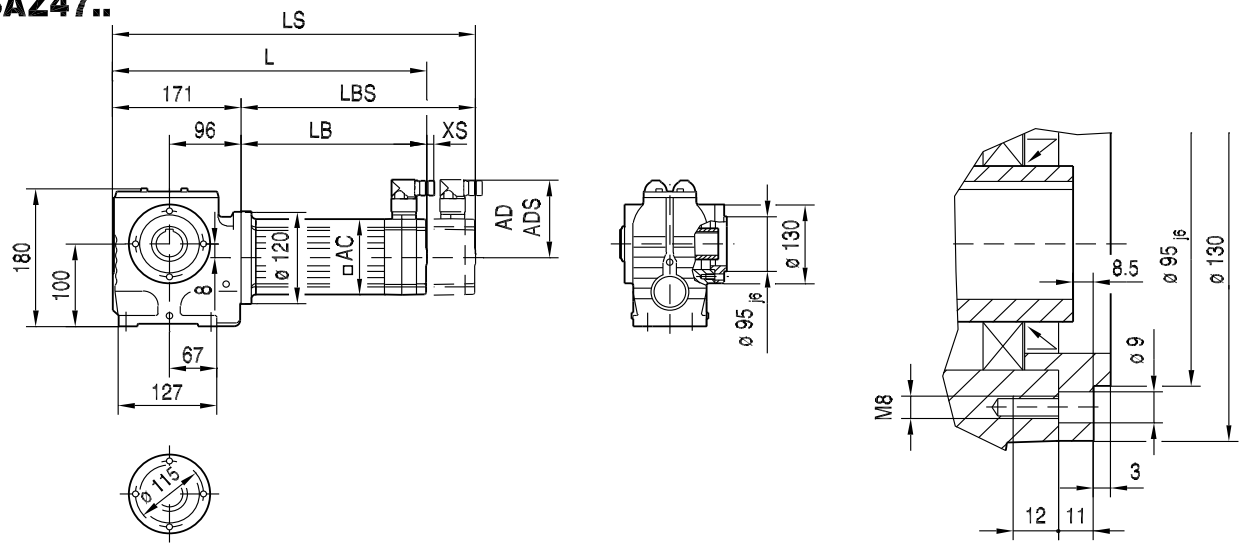

SAZ47..

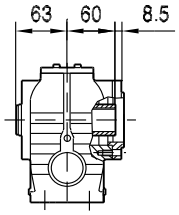

SHZ47..

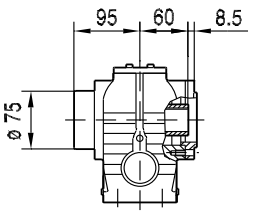

ø 30 H7

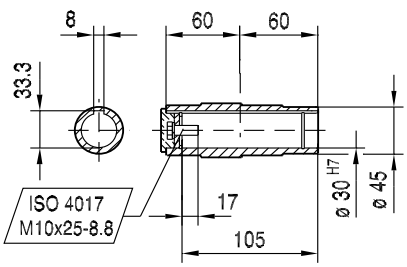

ø 25 H7

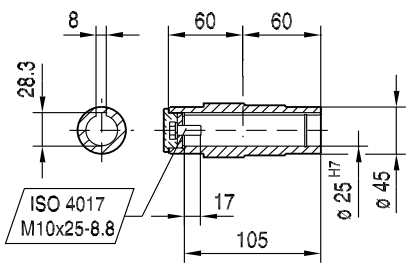

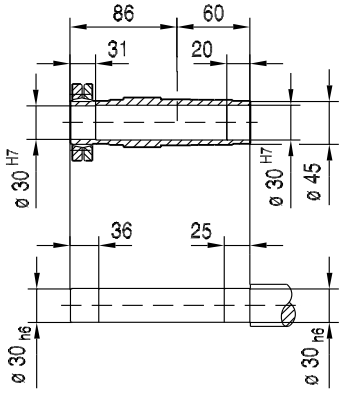

(→ 📖 144)		CMP50S	CMP50M	CMP50L	CMP63S	CMP63M	CMP63L	CMP71S	CMP71M
AC		73	73	73	88	88	88	115	115
AD		86	86	86	92	92	92	102	102
ADS		86	86	86	92	92	92	104	104
L		316	355	394	351	401	454	343	371
LS		345	384	423	379	429	483	408	436
LB		145	184	223	180	230	283	172	200
LBS		174	213	252	208	258	312	237	265
XS		18	18	18	14	14	14	11	11

02 009 01 07

ST47..

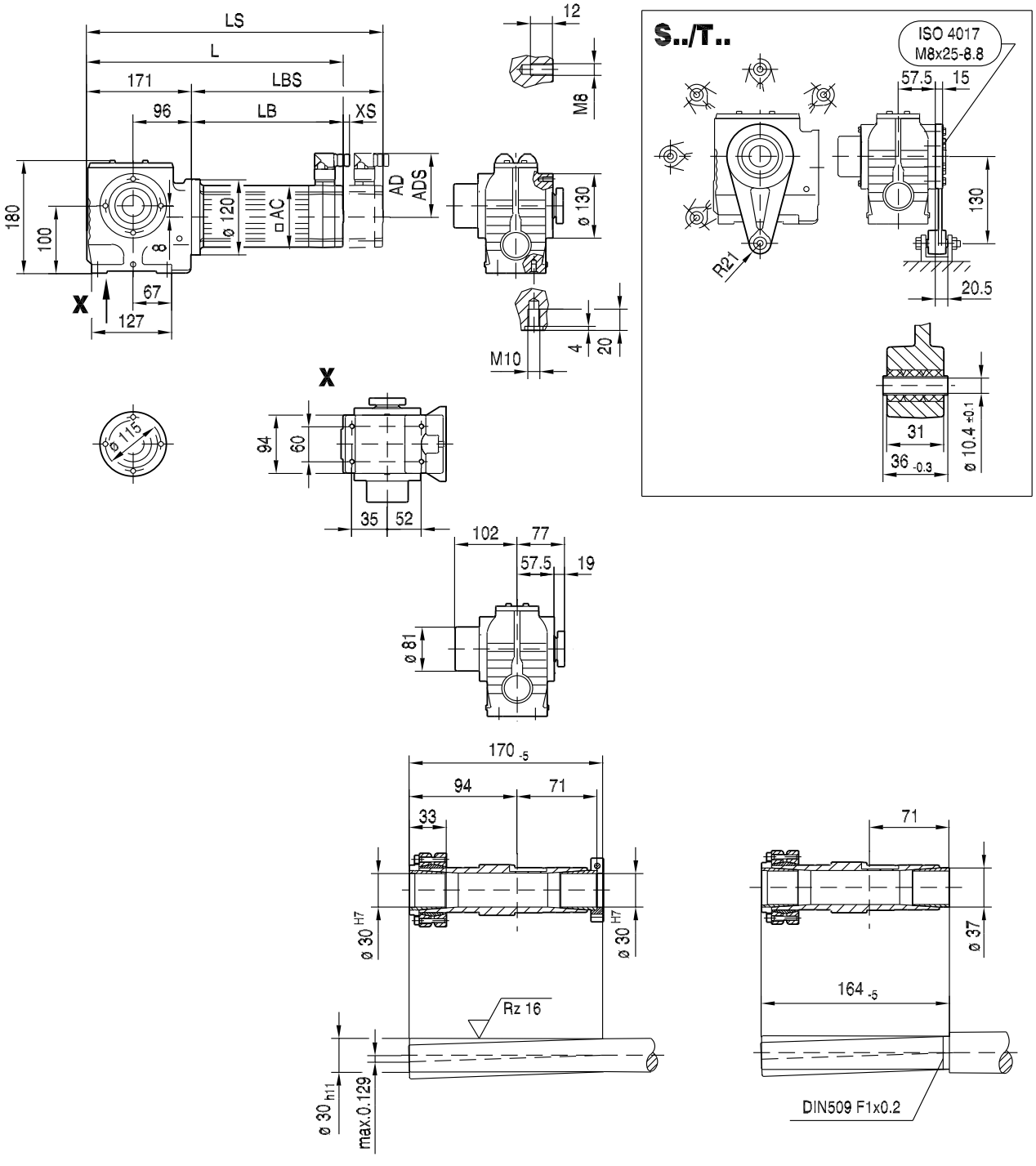

(→ 📖 144)		CMP50S	CMP50M	CMP50L	CMP63S	CMP63M	CMP63L	CMP71S	CMP71M
AC		73	73	73	88	88	88	115	115
AD		86	86	86	92	92	92	102	102
ADS		86	86	86	92	92	92	104	104
L		316	355	394	351	401	454	343	371
LS		345	384	423	379	429	483	408	436
LB		145	184	223	180	230	283	172	200
LBS		174	213	252	208	258	312	237	265
XS		18	18	18	14	14	14	11	11

11.2.3 S 57

M_{aDyn} [Nm]		CMP									
	i	**50S**	**50M**	**50L**	**63S**	**63M**	**63L**	**71S**	**71M**	**71L**	**80S**
	4.00	19	37	55	40	77	>106	69	>106	>106	>106
	4.76	22	44	66	48	92	>126	82	>126	>126	>126
	5.39	25	50	75	54	104	>142	93	>142	>142	>142
	6.40	30	59	88	63	122	>147	109	>147	>147	>147
	6.83	32	63	94	67	130	>150	117	>150	>150	>150
	7.28	34	67	100	72	139	>183	124	>183	>183	>183
	8.64	40	78	117	84	163	>210	146	>210	>210	>210
	9.23	42	84	125	90	174	>220	156	>220	>220	>220
	10.80	49	98	146	105	200	>220	182	>220	>220	>220
	12.10	55	110	164	118	>220	>220	200	>220	>220	>220
	14.24	64	128	191	138	>220	>220	>220	>220		
S57	16.47	75	148	>220	159	>220		>220			
2	17.62	79	156	>215	168	>215		>215			
	19.54		163	240	176	>270	>270	>270	>270	>270	>270
	20.33	91	180		194						
	23.20	98	194	285	205	>315	>315	>315	>315	>315	>315
	24.77	103	200	305	215	>330	>330	>330	>330	>330	>330
	29.00	121	235	355	255	>360	>360	>360	>360	>360	>360
	32.48	133	260	>365	280	>365	>365	>365	>365	>365	>365
	38.23	155	305	>365	330	>365	>365	>365	>365		
	44.22	179	355	>365	>365	>365		>365			
	47.32	189	>365	>365	>365	>365		>365			
	54.59	215	>365		>365						
	63.80	250									
	69.39	270									

11

→ 📖 144

m [kg]		CMP									
	s	**50S**	**50M**	**50L**	**63S**	**63M**	**63L**	**71S**	**71M**	**71L**	**80S**
S57	2	17	17	18	19	20	22	22	23	25	29
SF: + 3.8 kg / SA: + -0.3 kg / SAF: + 2.6 kg											

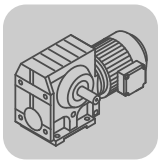

S..CMP
S..[mm]

CMP..	i	n_{epk} [1/min]	η [%]	c_{TG} S [Nm/']	SF [Nm/']	SA [Nm/']	SAF [Nm/']
S57 2	4.00	4500	90	-	-	-	-
	4.76	4500	90	-	-	-	-
	5.39	4500	90	-	-	-	-
	6.40	4500	89	-	-	-	-
	6.83	4500	89	-	-	-	-
	7.28	4500	89	-	-	-	-
	8.64	4500	88	-	-	-	-
	9.23	4500	88	-	-	-	-
	10.80	4500	88	-	-	-	-
	12.10	4500	88	-	-	-	-
	14.24	4500	87	-	-	-	-
	16.47	4500	87	-	-	-	-
	17.62	4500	86	-	-	-	-
	19.54	4500	81	-	-	-	-
	20.33	4500	86	-	-	-	-
	23.20	4500	81	-	-	-	-
	24.77	4500	80	-	-	-	-
	29.00	4500	80	-	-	-	-
	32.48	4500	79	-	-	-	-
	38.23	4500	78	-	-	-	-
	44.22	4500	78	-	-	-	-
	47.32	4500	77	-	-	-	-
	54.59	4500	77	-	-	-	-
	63.80	4500	76	-	-	-	-
	69.39	4500	75	-	-	-	-

CMP..							F_{Ramax}				F_{Rapk}			
n_e = 1400	i	M_{amax} [Nm]	M_{apk} [Nm]	$M_{aNotaus}$ [Nm]	n_{ak} [1/min]	J_G 10^{-4} [kgm^2]	S [N]	SF [N]	SA [N]	SAF [N]	S [N]	SF [N]	SA [N]	SAF [N]
S57 2	4.00	88	106	159	275	4.5	3380	3320	2730	2730	8170	8170	10000	10000
	4.76	93	126	189	231	3.3	3590	3520	2900	2900	8110	8110	10000	10000
	5.39	95	142	210	204	2.6	3760	3690	3040	3040	8060	8060	10000	10000
	6.40	98	147	220	172	1.9	4010	3930	3250	3250	8040	8040	10000	10000
	6.83	100	150	225	161	1.7	4100	4010	3330	3330	8030	8030	10000	10000
	7.28	146	183	248	27	1.7	3790	3770	2620	2620	7880	7880	10000	10000
	8.64	166	211	282	23	1.3	3900	3890	2430	2430	7730	7730	10000	10000
	9.23	169	223	287	22	1.1	3990	3980	2530	2530	7660	7660	10000	10000
	10.80	169	220	287	19	0.85	4290	4270	3000	3000	7680	7680	10000	10000
	12.10	169	220	287	17	0.70	4520	4490	3360	3360	7680	7680	10000	10000
	14.24	169	220	287	14	0.51	4860	4820	3810	3810	7680	7680	10000	10000
	16.47	168	220	286	12	0.40	5200	5130	4120	4120	7680	7680	10000	10000
	17.62	168	215	286	11	0.36	5350	5280	4260	4260	7710	7710	10000	10000
	19.54	215	274	366	26	1.3	5720	5620	4610	4610	7300	7300	10000	10000
	20.33	168	215	286	10	0.28	5690	5600	4560	4560	7710	7710	10000	10000
	23.20	245	315	417	9	0.95	5930	5840	4710	4710	6950	6950	10000	10000
	24.77	245	330	417	8	0.85	6100	6000	4870	4870	6800	6800	10000	10000
	29.00	245	360	417	7	0.65	6520	6410	5250	5250	6470	6470	10000	10000
	32.48	245	367	417	6	0.54	6840	6710	5540	5540	6380	6380	10000	10000
	38.23	245	367	417	5	0.39	7320	7170	5970	5970	6380	6380	10000	10000
	44.22	245	367	417	11	0.32	7520	7520	6380	6380	6380	6380	10000	10000
	47.32	245	367	417	11	0.28	7520	7520	6580	6580	6380	6380	10000	10000
	54.59	245	367	417	9	0.23	7520	7520	7000	7000	6380	6380	10000	10000
	63.80	245	360	417	8	0.18	7520	7520	7500	7500	6470	6470	10000	10000
	69.39	245	360	417	7	0.15	7520	7520	7770	7770	6470	6470	10000	10000

02 010 01 07

S57..

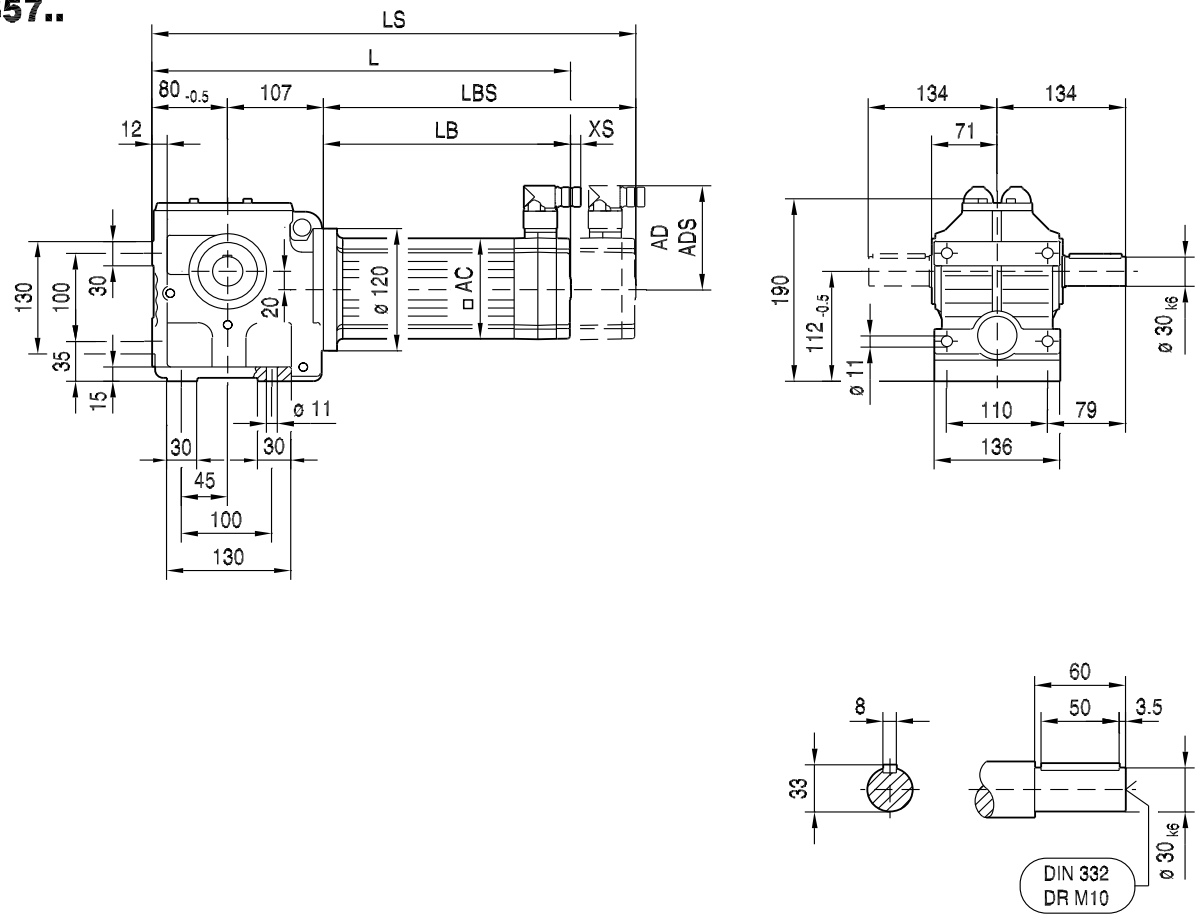

(→ 📖 144)		CMP50S	CMP50M	CMP50L	CMP63S	CMP63M	CMP63L	CMP71S	CMP71M	CMP71L	CMP80S
AC		73	73	73	88	88	88	115	115	115	137
AD		86	86	86	92	92	92	102	102	102	134
ADS		86	86	86	92	92	92	104	104	104	137
L		332	371	410	367	417	470	359	387	434	399
LS		361	400	439	395	445	499	424	452	499	477
LB		145	184	223	180	230	283	172	200	247	212
LBS		174	213	252	208	258	312	237	265	312	290
XS		18	18	18	14	14	14	11	11	11	37

02 011 01 07

SF57..

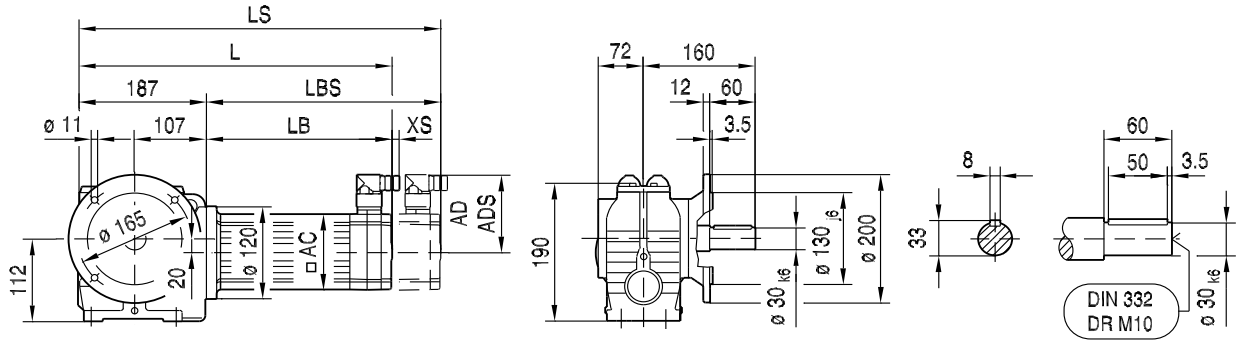

SAF57..

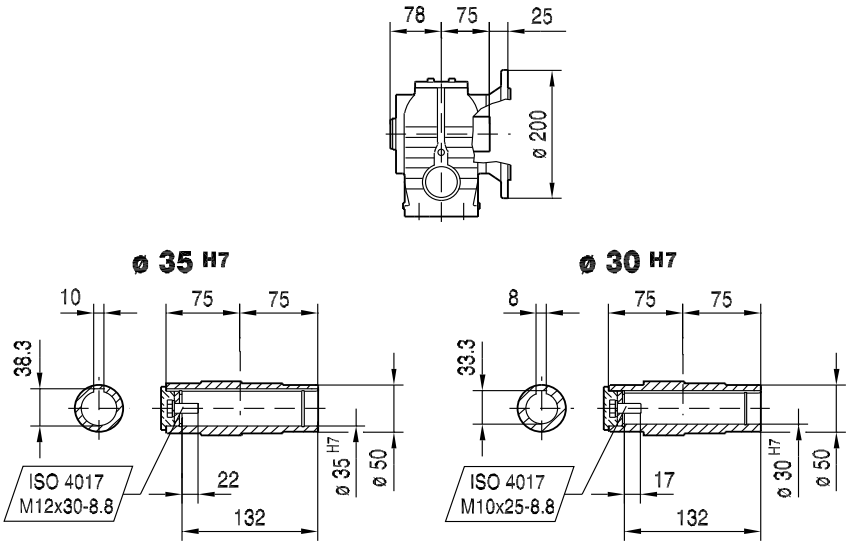

SHF57..

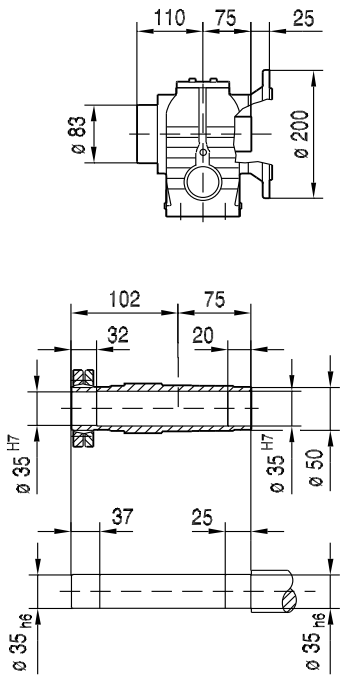

(→ 📖 144)		CMP50S	CMP50M	CMP50L	CMP63S	CMP63M	CMP63L	CMP71S	CMP71M	CMP71L	CMP80S
AC		73	73	73	88	88	88	115	115	115	137
AD		86	86	86	92	92	92	102	102	102	134
ADS		86	86	86	92	92	92	104	104	104	137
L		332	371	410	367	417	470	359	387	434	399
LS		361	400	439	395	445	499	424	452	499	477
LB		145	184	223	180	230	283	172	200	247	212
LBS		174	213	252	208	258	312	237	265	312	290
XS		18	18	18	14	14	14	11	11	11	37

02 012 01 07

SA57..

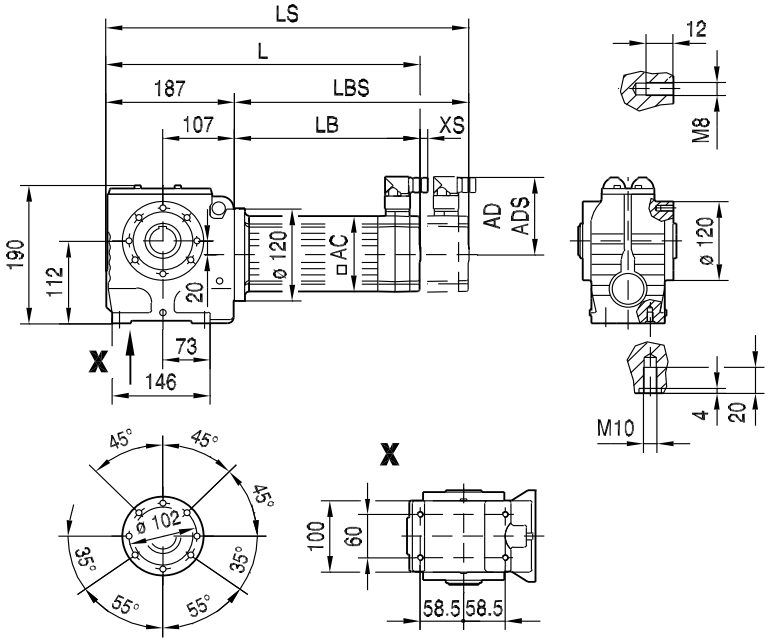

S.. /T..

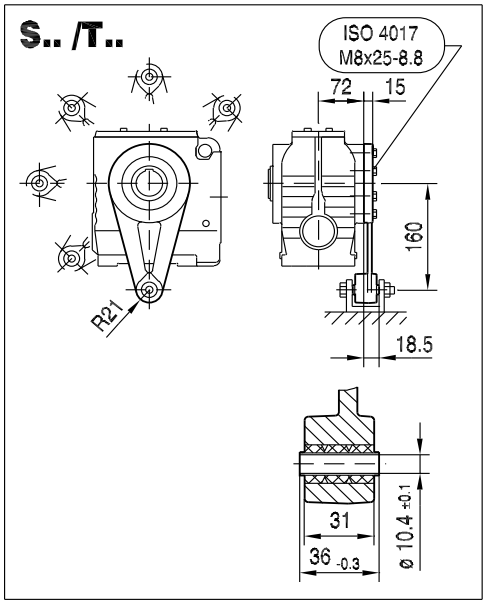

SA57..

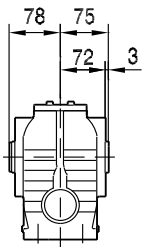

SH57..

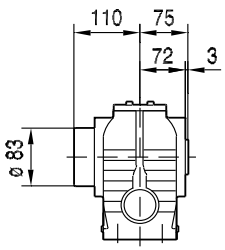

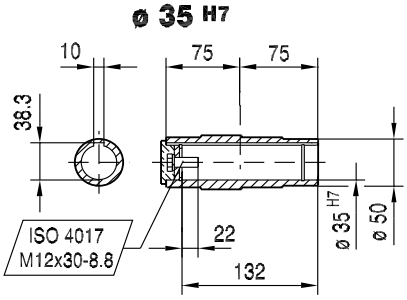

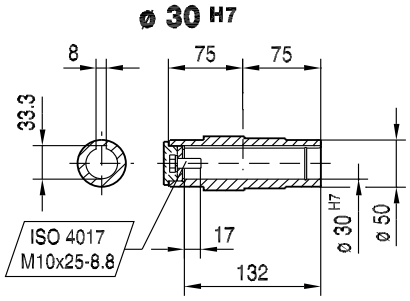

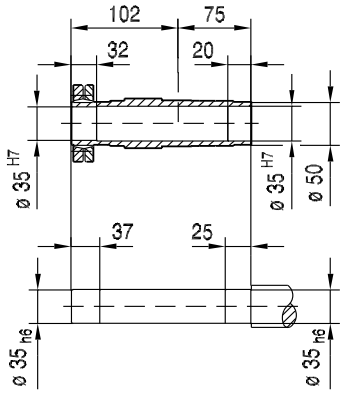

(→ 📖 144)		CMP50S	CMP50M	CMP50L	CMP63S	CMP63M	CMP63L	CMP71S	CMP71M	CMP71L	CMP80S
AC		73	73	73	88	88	88	115	115	115	137
AD		86	86	86	92	92	92	102	102	102	134
ADS		86	86	86	92	92	92	104	104	104	137
L		332	371	410	367	417	470	359	387	434	399
LS		361	400	439	395	445	499	424	452	499	477
LB		145	184	223	180	230	283	172	200	247	212
LBS		174	213	252	208	258	312	237	265	312	290
XS		18	18	18	14	14	14	11	11	11	37

02 013 01 07

SAZ57..

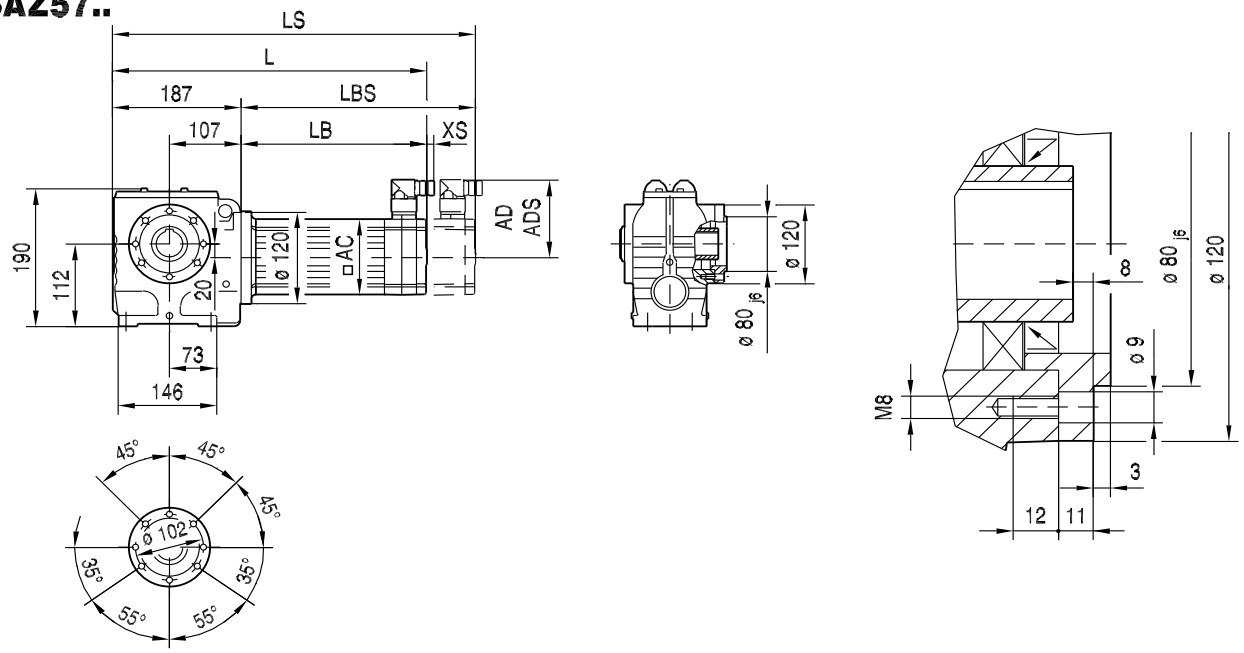

SAZ57..

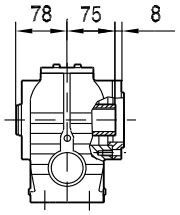

SHZ57..

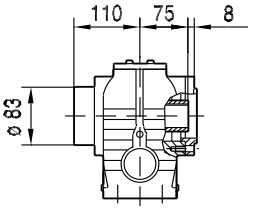

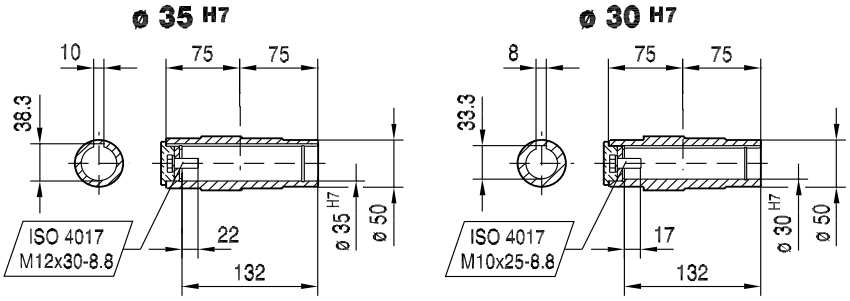

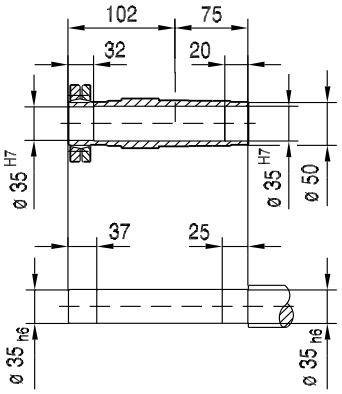

(→ 📖 144)		CMP50S	CMP50M	CMP50L	CMP63S	CMP63M	CMP63L	CMP71S	CMP71M	CMP71L	CMP80S
AC		73	73	73	88	88	88	115	115	115	137
AD		86	86	86	92	92	92	102	102	102	134
ADS		86	86	86	92	92	92	104	104	104	137
L		332	371	410	367	417	470	359	387	434	399
LS		361	400	439	395	445	499	424	452	499	477
LB		145	184	223	180	230	283	172	200	247	212
LBS		174	213	252	208	258	312	237	265	312	290
XS		18	18	18	14	14	14	11	11	11	37

02 014 01 07

ST57..

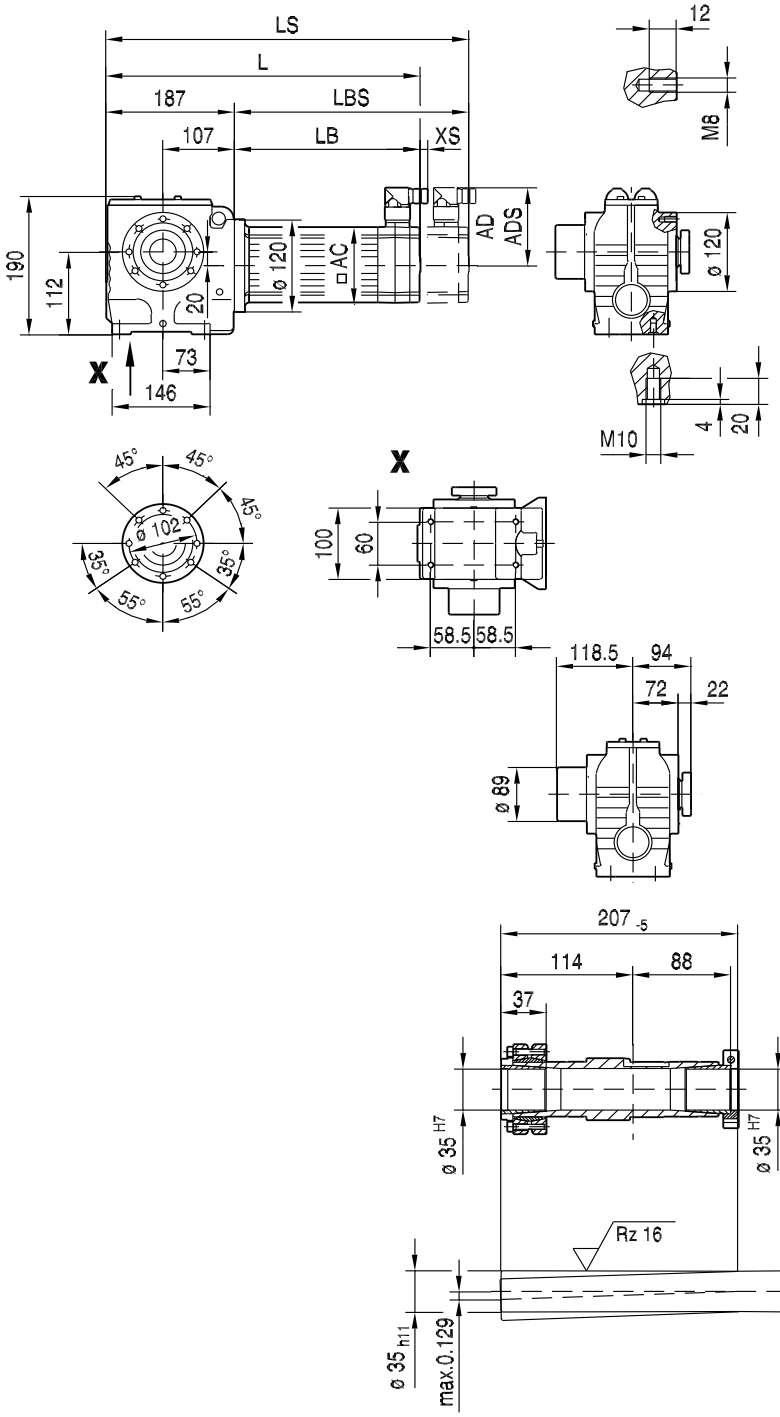

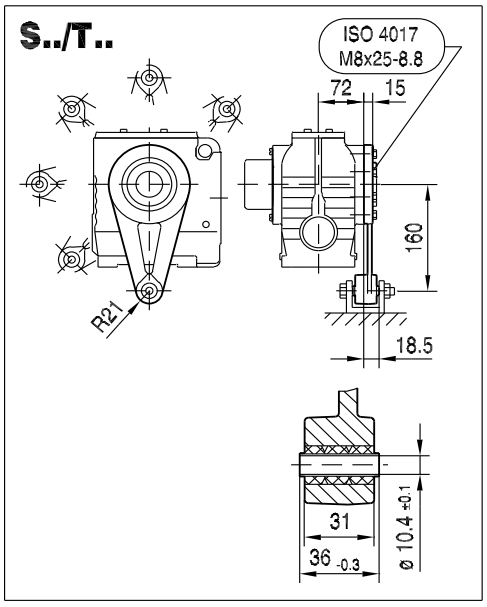

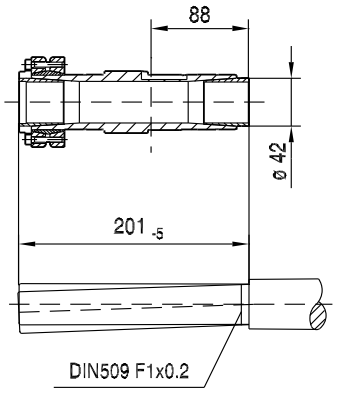

(→ 📖 144)		CMP50S	CMP50M	CMP50L	CMP63S	CMP63M	CMP63L	CMP71S	CMP71M	CMP71L	CMP80S
AC		73	73	73	88	88	88	115	115	115	137
AD		86	86	86	92	92	92	102	102	102	134
ADS		86	86	86	92	92	92	104	104	104	137
L		332	371	410	367	417	470	359	387	434	399
LS		361	400	439	395	445	499	424	452	499	477
LB		145	184	223	180	230	283	172	200	247	212
LBS		174	213	252	208	258	312	237	265	312	290
XS		18	18	18	14	14	14	11	11	11	37

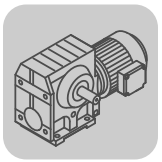

11.2.4 S 67

M_{aDyn} [Nm]		CMP											
	i	**50S**	**50M**	**50L**	**63S**	**63M**	**63L**	**71S**	**71M**	**71L**	**80S**	**80M**	**100S**
	7.56		69	104	75	144	200	129	205	315	280	>375	>375
	8.69	40	80	119	86	166	235	148	235	360	325	>420	>420
	10.03	46	92	137	99	191	270	171	270	415	375	>450	>450
	11.03	51	101	151	109	210	295	188	300	>455	410	>455	>455
	12.96	60	119	178	128	245	350	220	355	>455	>455	>455	>455
	13.73	64	126	188	136	260	370	230	375	>455	>455	>455	>455
	15.60	71	141	210	152	290	415	260	420	>455	>455		
	17.28	79	157	230	169	325	>455	290	>455	>455	>455		
	20.30									>490	>490	>490	>490
	20.37	92	183	270	197	375	>450	340	>450				
S67	23.22	105	205	310	220	430		385					
2	23.33						>515		>515	>515	>515	>515	>515
	24.44	111	215	325	235	>450		405					
	26.93	113	220	335	240	465	>535	415	>535	>535	>535	>535	>535
	29.63	125	245	365	265	510	>550	460	>550	>550	>550	>550	>550
	34.80	145	285	425	305	>575	>575	530	>575	>575	>575	>575	>575
	36.85	153	300	450	325	>580	>580	565	>580	>580	>580	>580	>580
	41.89	174	345	515	370	>595	>595	>595	>595	>595	>595		
	46.40	191	375	560	405	>610	>610	>610	>610	>610	>610		
	54.70	220	435	>625	470	>625	>625	>625	>625				
	62.35	250	500	>640	535	>640		>640					
	65.63	265	525	>645	565	>645		>645					
	75.06	300	595		640								

→ 📖 144

m [kg]		CMP											
	s	**50S**	**50M**	**50L**	**63S**	**63M**	**63L**	**71S**	**71M**	**71L**	**80S**	**80M**	**100S**
S67	**2**	27	28	29	29	31	32	32	34	36	39	41	47
SF: + 6.5 kg / SA: + 1.0 kg / SAF: + 5.5 kg													

CMP..	i	n_{epk} [1/min]	η [%]	c_{TG} S [Nm/']	SF [Nm/']	SA [Nm/']	SAF [Nm/']
	7.56	4500	89	-	-	-	-
	8.69	4500	89	-	-	-	-
	10.03	4500	89	-	-	-	-
	11.03	4500	89	-	-	-	-
	12.96	4500	89	-	-	-	-
	13.73	4500	89	-	-	-	-
	15.60	4500	88	-	-	-	-
	17.28	4500	88	-	-	-	-
	20.30	4500	82	-	-	-	-
	20.37	4500	87	-	-	-	-
S67	23.22	4500	87	-	-	-	-
2	23.33	4500	82	-	-	-	-
	24.44	4500	87	-	-	-	-
	26.93	4500	81	-	-	-	-
	29.63	4500	81	-	-	-	-
	34.80	4500	80	-	-	-	-
	36.85	4500	80	-	-	-	-
	41.89	4500	80	-	-	-	-
	46.40	4500	79	-	-	-	-
	54.70	4500	78	-	-	-	-
	62.35	4500	78	-	-	-	-
	65.63	4500	78	-	-	-	-
	75.06	4500	77	-	-	-	-

CMP..							F_{Ramax}				F_{Rapk}			
n_e = 1400	i	M_{amax} [Nm]	M_{apk} [Nm]	$M_{aNotaus}$ [Nm]	n_{ak} [1/min]	J_G 10^{-4} [kgm^2]	S [N]	SF [N]	SA [N]	SAF [N]	S [N]	SF [N]	SA [N]	SAF [N]
	7.56	295	375	502	26	5.4	3220	3890	2540	2540	9740	9740	12000	12000
	8.69	335	420	570	23	4.3	2860	3590	2020	2020	9460	9460	12000	12000
	10.03	340	450	578	20	3.3	3290	4050	2480	2480	9250	9250	12000	12000
	11.03	340	455	578	18	2.8	3660	4430	2890	2890	9210	9210	12000	12000
	12.96	340	455	578	15	2.2	4310	5110	3610	3610	9210	9210	12000	12000
	13.73	340	455	578	15	2.0	4510	5310	3870	3870	9210	9210	12000	12000
	15.60	340	455	578	13	1.5	4820	5640	4480	4480	9210	9210	12000	12000
	17.28	340	455	578	12	1.3	5080	5910	4990	4990	9210	9210	12000	12000
	20.30	425	490	723	10	4.0	5760	6650	6090	6090	8940	8940	12000	12000
	20.37	340	450	578	34	0.99	5520	6360	5700	5700	9250	9250	12000	12000
S67	23.22	340	450	578	47	0.71	5890	6740	6110	6110	9250	9250	12000	12000
2	23.33	480	515	816	9	3.2	5810	6800	6120	6120	8720	8720	12000	12000
	24.44	340	450	578	45	0.63	6040	6900	6270	6270	9250	9250	12000	12000
	26.93	480	535	816	7	2.6	6240	7240	6590	6590	8540	8540	12000	12000
	29.63	480	550	816	7	2.2	6540	7540	6920	6920	8390	8390	12000	12000
	34.80	480	575	816	14	1.8	7060	8080	7490	7490	8140	8140	12000	12000
	36.85	480	580	816	14	1.6	7250	8280	7710	7710	8080	8080	12000	12000
	41.89	480	595	816	12	1.3	7690	8740	8200	8200	7920	7920	12000	12000
	46.40	480	610	816	11	1.1	8060	9020	8600	8600	7740	7740	12000	12000
	54.70	480	625	816	9	0.84	8670	9020	9280	9280	7560	7560	12000	12000
	62.35	480	640	816	8	0.59	9020	9020	9850	9850	7370	7370	12000	12000
	65.63	480	645	816	8	0.53	9020	9020	10100	10100	6930	7300	12000	12000
	75.06	480	655	816	7	0.43	9020	9020	10700	10700	5930	7170	12000	12000

02 015 01 07

S67..

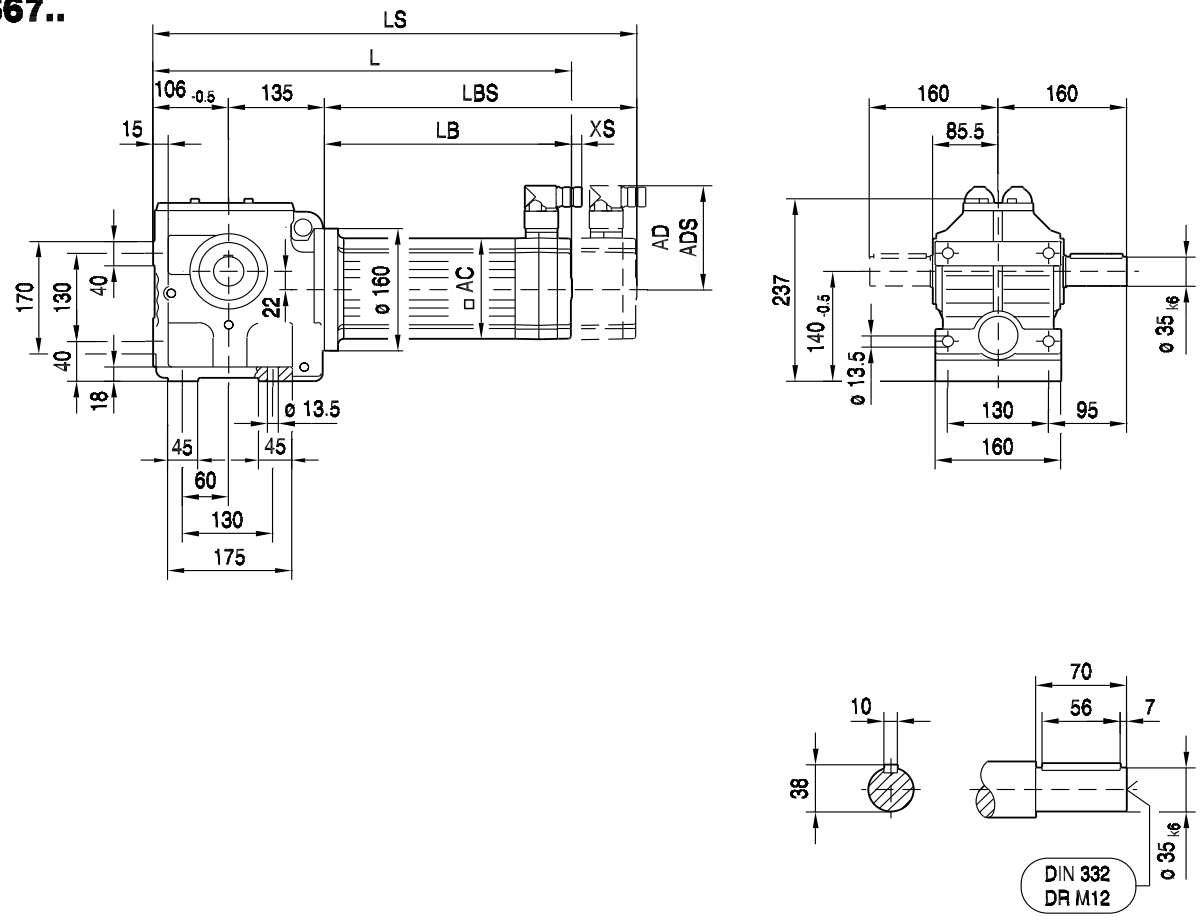

(→ 📖 144)	CMP50M	CMP50L	CMP63S	CMP63M	CMP63L	CMP71S	CMP71M	CMP71L	CMP80S	CMP80M	CMP100S
AC	73	73	88	88	88	115	115	115	137	137	162
AD	86	86	92	92	92	102	102	102	134	134	146
ADS	86	86	92	92	92	104	104	104	137	137	147
L	419	458	414	464	514	407	432	482	447	485	483
LS	448	487	443	493	543	472	497	547	525	563	579
LB	178	217	173	223	273	166	191	241	206	244	242
LBS	207	246	202	252	302	231	256	306	284	322	338
XS	18	18	14	14	14	11	11	11	37	37	37

02 016 01 07

SF67..

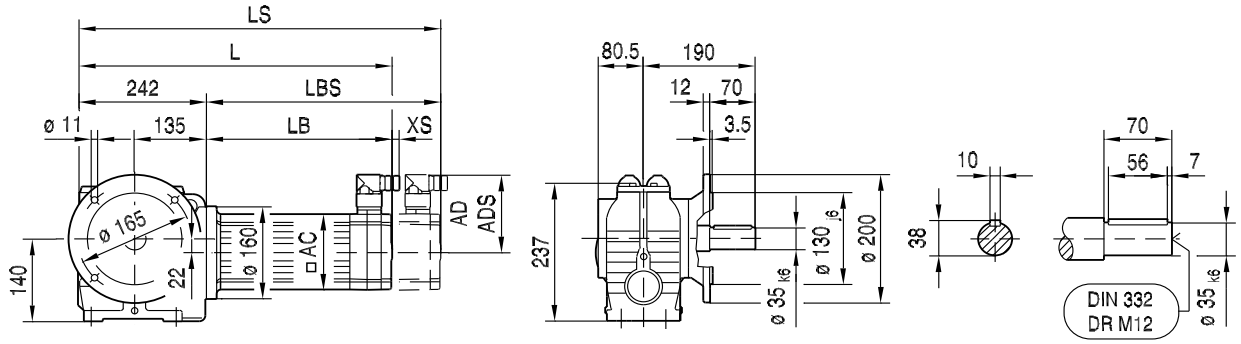

SAF67..

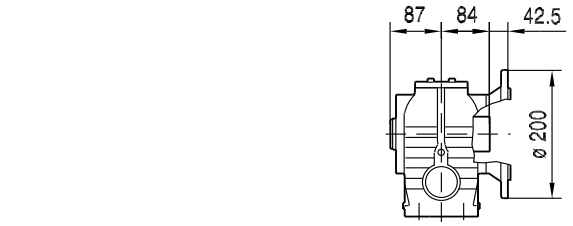

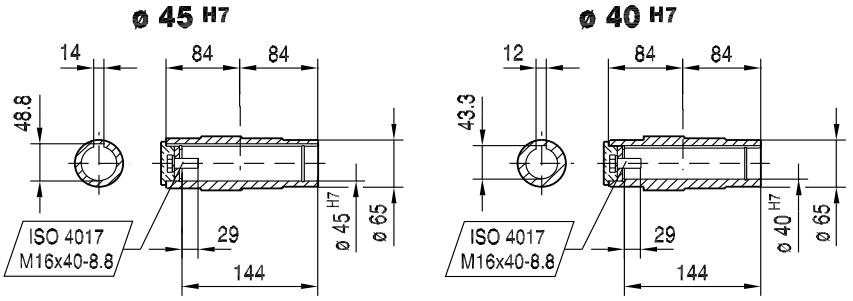

SHF67..

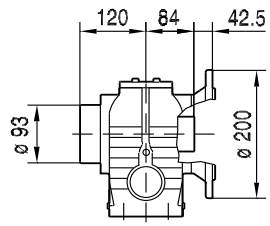

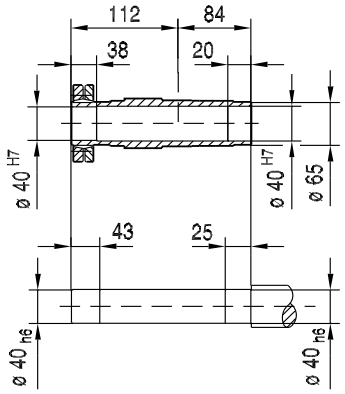

(→ 144)	CMP50M	CMP50L	CMP63S	CMP63M	CMP63L	CMP71S	CMP71M	CMP71L	CMP80S	CMP80M	CMP100S
AC	73	73	88	88	88	115	115	115	137	137	162
AD	86	86	92	92	92	102	102	102	134	134	146
ADS	86	86	92	92	92	104	104	104	137	137	147
L	420	459	415	465	515	408	433	483	448	486	484
LS	449	488	444	494	544	473	498	548	526	564	580
LB	178	217	173	223	273	166	191	241	206	244	242
LBS	207	246	202	252	302	231	256	306	284	322	338
XS	18	18	14	14	14	11	11	11	37	37	37

02 017 01 07

SA67..

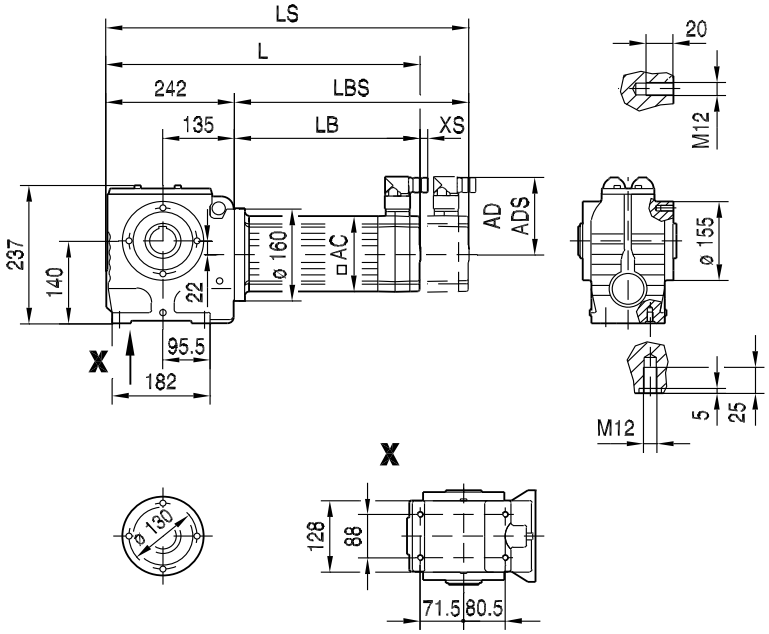

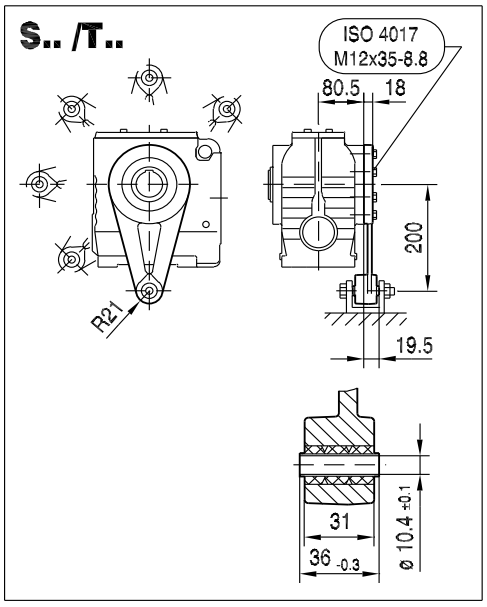

SA67..

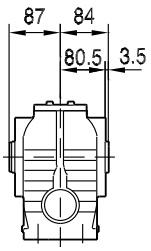

SH67..

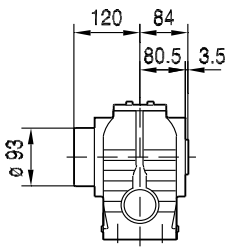

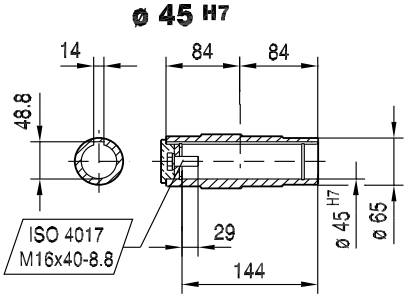

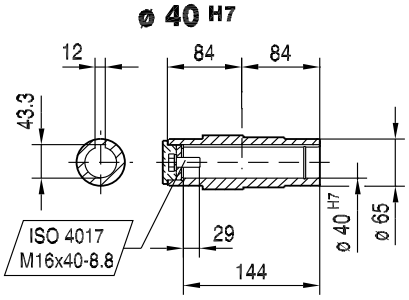

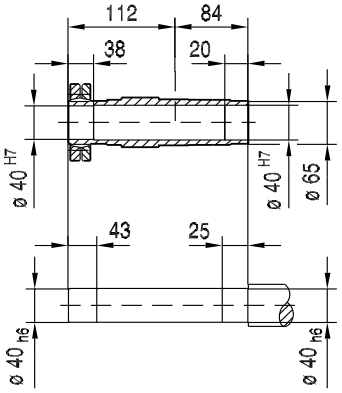

(→ 📖 144)	CMP50M	CMP50L	CMP63S	CMP63M	CMP63L	CMP71S	CMP71M	CMP71L	CMP80S	CMP80M	CMP100S
AC	73	73	88	88	88	115	115	115	137	137	162
AD	86	86	92	92	92	102	102	102	134	134	146
ADS	86	86	92	92	92	104	104	104	137	137	147
L	420	459	415	465	515	408	433	483	448	486	484
LS	449	488	444	494	544	473	498	548	526	564	580
LB	178	217	173	223	273	166	191	241	206	244	242
LBS	207	246	202	252	302	231	256	306	284	322	338
XS	18	18	14	14	14	11	11	11	37	37	37

02 018 01 07

SAZ67..

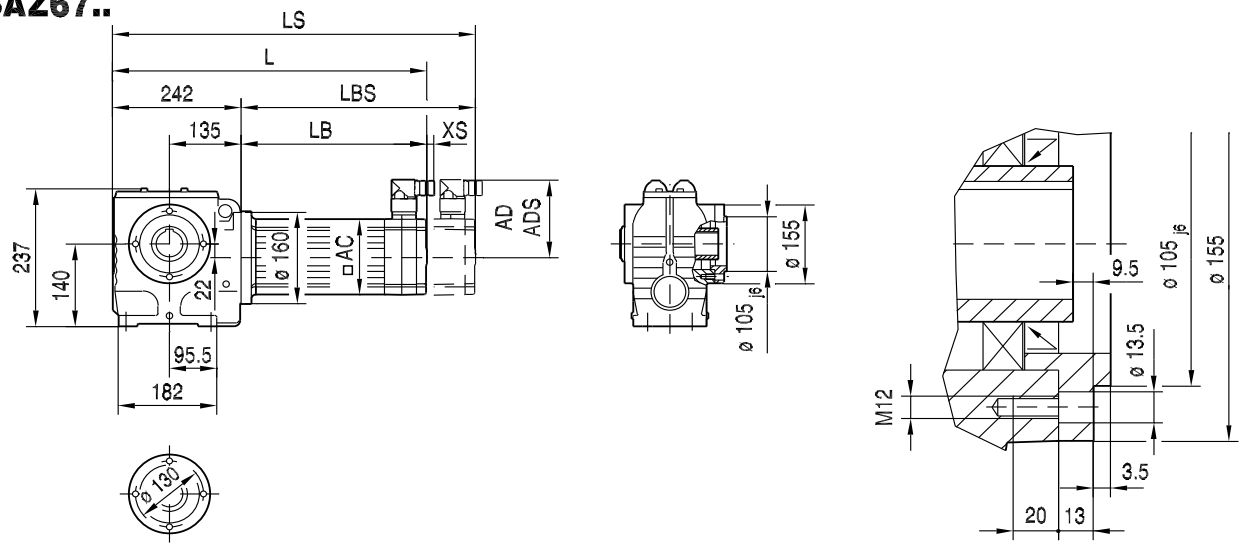

SAZ67..

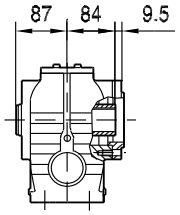

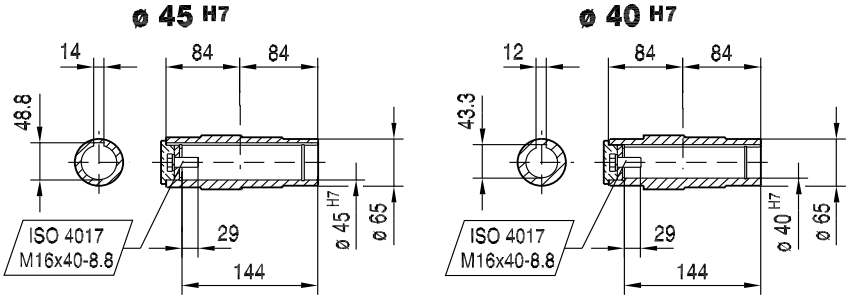

SHZ67..

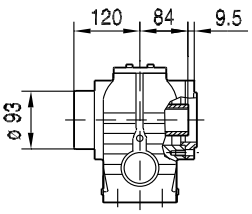

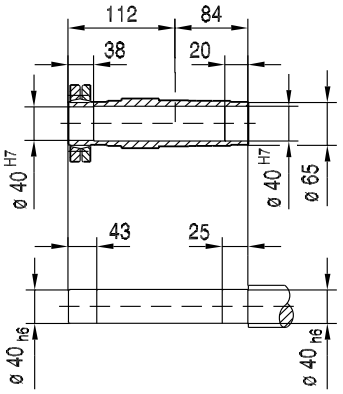

(→ 📖 144)	CMP50M	CMP50L	CMP63S	CMP63M	CMP63L	CMP71S	CMP71M	CMP71L	CMP80S	CMP80M	CMP100S
AC	73	73	88	88	88	115	115	115	137	137	162
AD	86	86	92	92	92	102	102	102	134	134	146
ADS	86	86	92	92	92	104	104	104	137	137	147
L	420	459	415	465	515	408	433	483	448	486	484
LS	449	488	444	494	544	473	498	548	526	564	580
LB	178	217	173	223	273	166	191	241	206	244	242
LBS	207	246	202	252	302	231	256	306	284	322	338
XS	18	18	14	14	14	11	11	11	37	37	37

02 019 01 07

ST67..

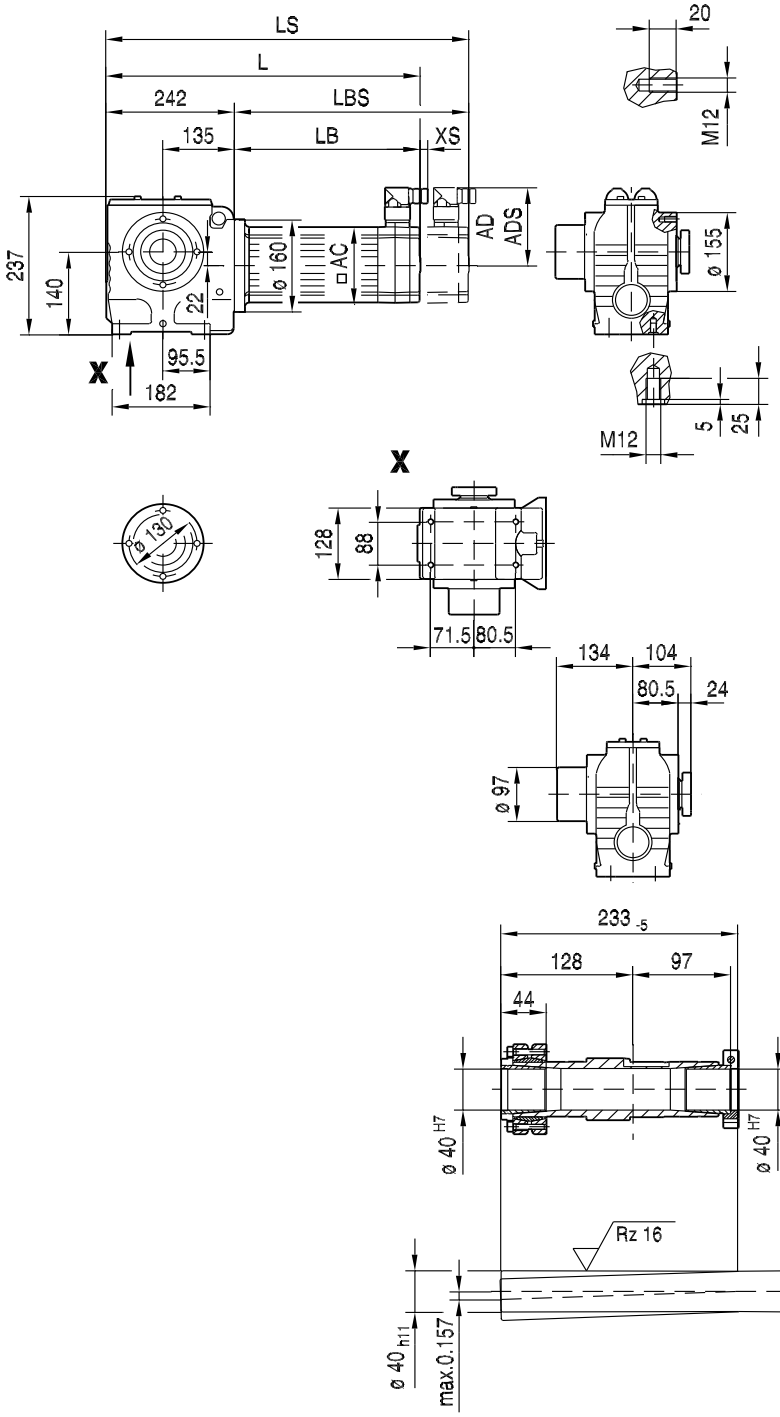

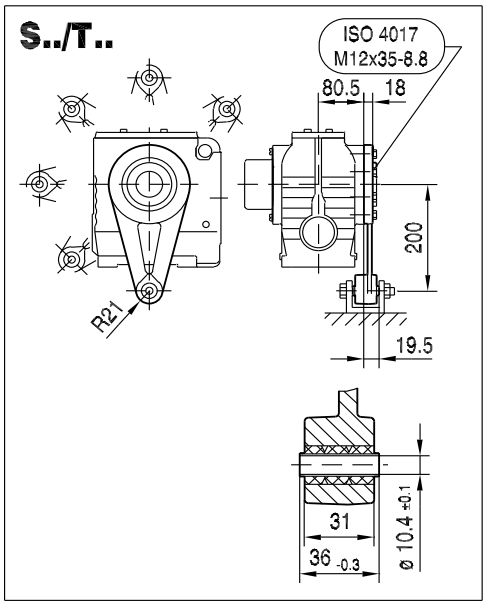

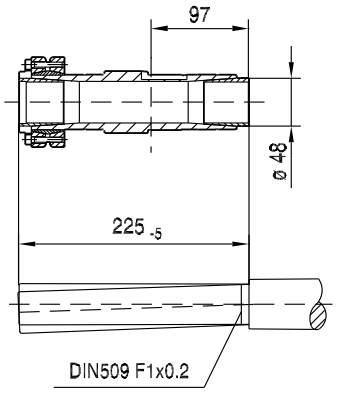

(→ 📖 144)	CMP50M	CMP50L	CMP63S	CMP63M	CMP63L	CMP71S	CMP71M	CMP71L	CMP80S	CMP80M	CMP100S
AC	73	73	88	88	88	115	115	115	137	137	162
AD	86	86	92	92	92	102	102	102	134	134	146
ADS	86	86	92	92	92	104	104	104	137	137	147
L	420	459	415	465	515	408	433	483	448	486	484
LS	449	488	444	494	544	473	498	548	526	564	580
LB	178	217	173	223	273	166	191	241	206	244	242
LBS	207	246	202	252	302	231	256	306	284	322	338
XS	18	18	14	14	14	11	11	11	37	37	37

12 W..CMP

12.1 W..CMP

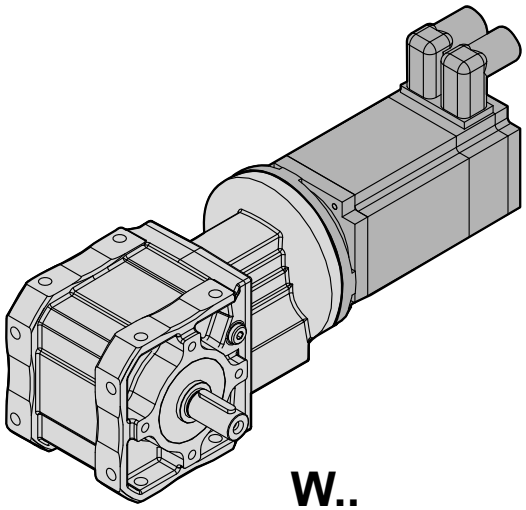

W..

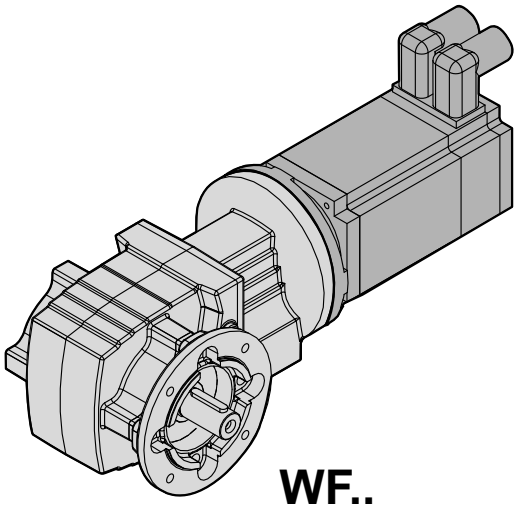

WF..

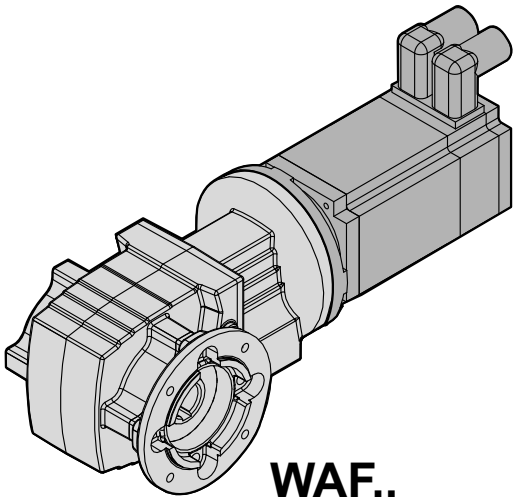

WAF..

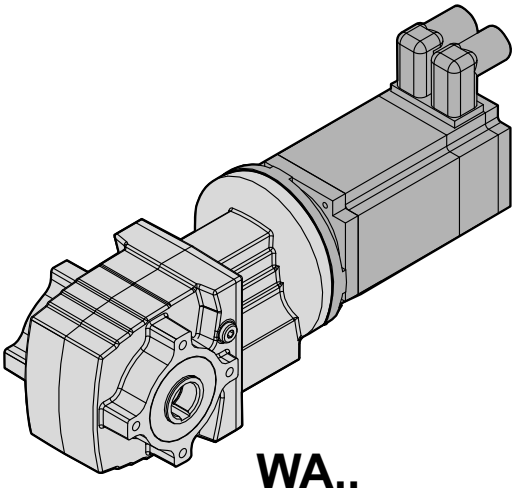

WA..

65967axx

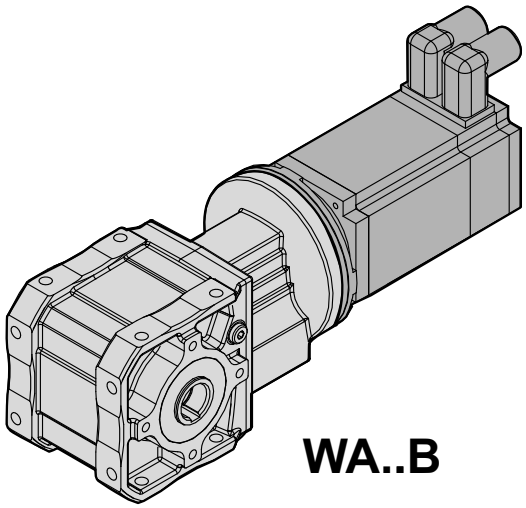

WA..B

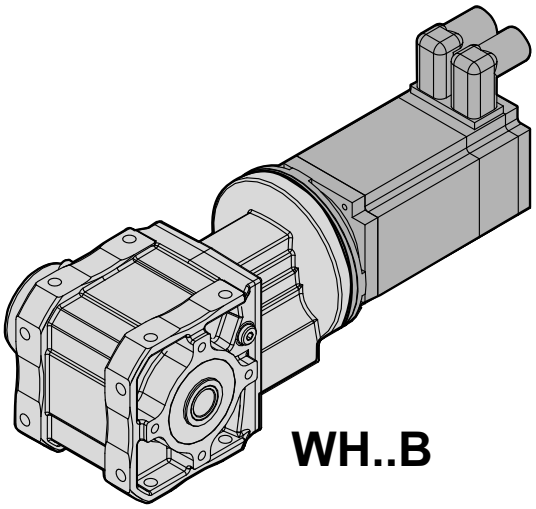

WH..B

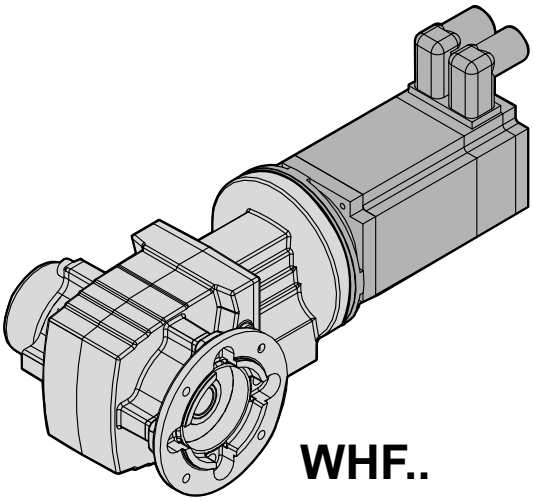

WHF..

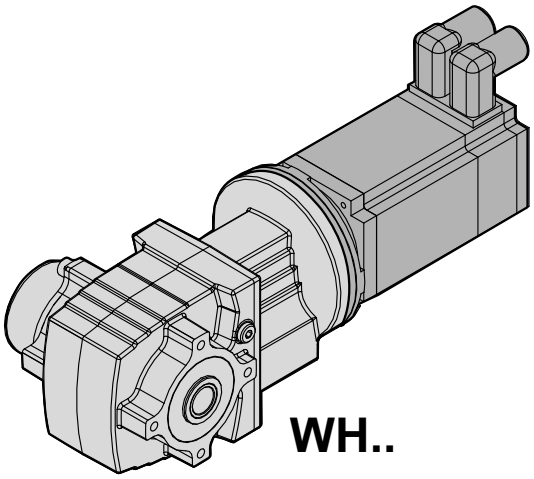

WH..

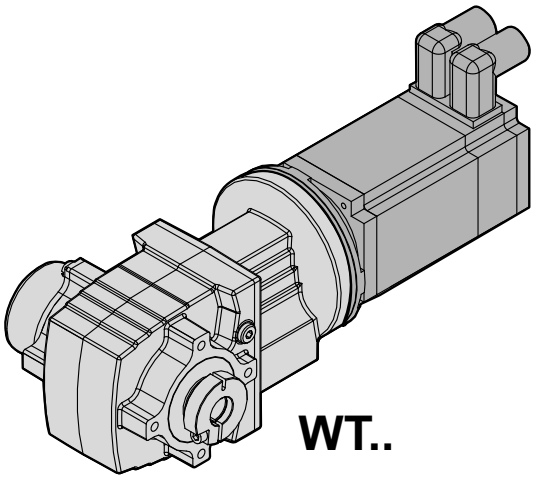

WT..

65969axx

12.2 W..[mm]

12.2.1 W 37

M_{aDyn} [Nm]		CMP								
	i	40M	50S	50M	50L	63S	63M	63L	71S	71M
W37 2	3.20	11	15	31	46	33	64	>84	57	>84
	3.93	14	19	37	56	40	77	>84	69	>84
	5.11	18	24	48	72	52	>84	>84	>84	>84
	5.77	20	28	55	82	59	>84	>84	>84	>84
	6.97	24	33	66	>84	71	>84	>84	>84	>84
	8.55	30	40	80	>84	>84	>84		>84	
	9.92	34	47	>84		>84				
	10.67	35	48	96	>108	103	>108	>108	>108	>108
	11.65	40	55							
	12.70	44	60							
	13.89	45	62	>108	>108	>108	>108	>108	>108	>108
	15.67	51	70	>108	>108	>108	>108	>108	>108	>108
	18.94	61	84	>108	>108	>108	>108	>108	>108	>108
	21.33	62	84	>102	>102	>102	>102	>102	>102	>102
	23.25	74	102	>108	>108	>108	>108		>108	
	26.96	85	>108	>108		>108				
	27.78	78	107	>111	>111	>111	>111	>111	>111	>111
	31.33	87	>117	>117	>117	>117	>117	>117	>117	>117
	31.67	99	>108							
	34.52	106	>108							
	37.88	104	>126	>126	>126	>126	>126	>126	>126	>126
	46.49	124	>130	>130	>130	>130	>130		>130	
	53.92	>130	>130	>130		>130				
	63.33	>126	>126							
	69.05	>130	>130							

12

→ 📖 144

m [kg]		CMP								
	s	40M	50S	50M	50L	63S	63M	63L	71S	71M
W37	2	7.4	9.2	10	11	11	13	14	14	16
WF: + 0.0 kg / WA: + 0.0 kg / WAF: + 0.0 kg										

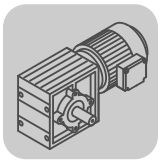

W..CMP
W..[mm]

CMP..				c_{TG}			
	i	n_{epk} [1/min]	η [%]	W [Nm/']	WF [Nm/']	WA [Nm/']	WAF [Nm/']
W37 2	3.20	4500	93	-	-	-	-
	3.93	4500	92	-	-	-	-
	5.11	4500	92	-	-	-	-
	5.77	4500	92	-	-	-	-
	6.97	4500	92	-	-	-	-
	8.55	4500	91	-	-	-	-
	9.92	4500	91	-	-	-	-
	10.67	4500	87	-	-	-	-
	11.65	4500	91	-	-	-	-
	12.70	4500	91	-	-	-	-
	13.89	4500	86	-	-	-	-
	15.67	4500	86	-	-	-	-
	18.94	4500	85	-	-	-	-
	21.33	4500	76	-	-	-	-
	23.25	4500	84	-	-	-	-
	26.96	4500	83	-	-	-	-
	27.78	4500	74	-	-	-	-
	31.33	4500	73	-	-	-	-
	31.67	4500	82	-	-	-	-
	34.52	4500	81	-	-	-	-
	37.88	4500	72	-	-	-	-
	46.49	4500	70	-	-	-	-
	53.92	4500	69	-	-	-	-
	63.33	4500	67	-	-	-	-
	69.05	4500	67	-	-	-	-

CMP..							F_{Ramax}				F_{Rapk}			
n_e = 1400	i	M_{amax} [Nm]	M_{apk} [Nm]	$M_{aNotaus}$ [Nm]	n_{ak} [1/min]	J_G 10^{-4} [kgm^2]	W [N]	WF [N]	WA [N]	WAF [N]	W [N]	WF [N]	WA [N]	WAF [N]
W37 2	3.20	70	84	119	2188	2.3	2220	2350	2050	2050	3690	3690	5000	5000
	3.93	70	84	119	1781	1.6	2410	2550	2240	2240	3690	3690	5000	5000
	5.11	70	84	119	1370	0.96	2680	2820	2490	2490	3690	3690	5000	5000
	5.77	70	84	119	1213	0.77	2810	2950	2620	2620	3690	3690	5000	5000
	6.97	70	84	119	1004	0.54	3020	3170	2830	2830	3690	3690	5000	5000
	8.55	70	84	119	819	0.37	3270	3420	3070	3070	3690	3690	5000	5000
	9.92	70	84	119	706	0.28	3460	3620	3250	3250	3690	3690	5000	5000
	10.67	90	108	153	150	0.80	2880	3140	2530	2530	3360	3360	5000	5000
	11.65	70	84	119	601	0.21	3680	3830	3460	3460	3690	3690	5000	5000
	12.70	70	84	119	551	0.18	3800	3830	3580	3580	3690	3690	5000	5000
	13.89	90	108	153	151	0.52	3250	3510	2890	2890	3360	3360	5000	5000
	15.67	90	108	153	147	0.42	3430	3610	3070	3070	3360	3360	5000	5000
	18.94	90	108	153	148	0.30	3610	3610	3360	3360	3360	3360	5000	5000
	21.33	110	102	144	66	0.71	3320	3320	2950	2950	3450	3450	5000	5000
	23.25	90	108	153	146	0.21	3610	3610	3690	3690	3360	3360	5000	5000
	26.96	90	108	153	145	0.16	3610	3610	3950	3950	3360	3360	5000	5000
	27.78	110	111	158	50	0.46	3320	3320	3400	3400	3300	3300	5000	5000
	31.33	110	117	166	45	0.38	3320	3320	3620	3620	2960	2960	5000	5000
	31.67	90	108	153	145	0.13	3610	3610	4240	4240	3360	3360	5000	5000
	34.52	90	108	153	145	0.11	3610	3610	4410	4410	3360	3360	5000	5000
	37.88	110	126	178	37	0.27	3320	3320	3990	3990	2080	2080	5000	5000
	46.49	110	130	187	32	0.19	3320	3320	4410	4410	1490	1490	5000	5000
	53.92	110	130	187	32	0.15	3320	3320	4730	4730	1490	1490	5000	5000
	63.33	110	126	178	36	0.12	3320	3320	5000	5000	2080	2080	5000	5000
	69.05	110	130	187	32	0.10	3320	3320	5000	5000	1490	1490	5000	5000

20 031 00 07

W37..

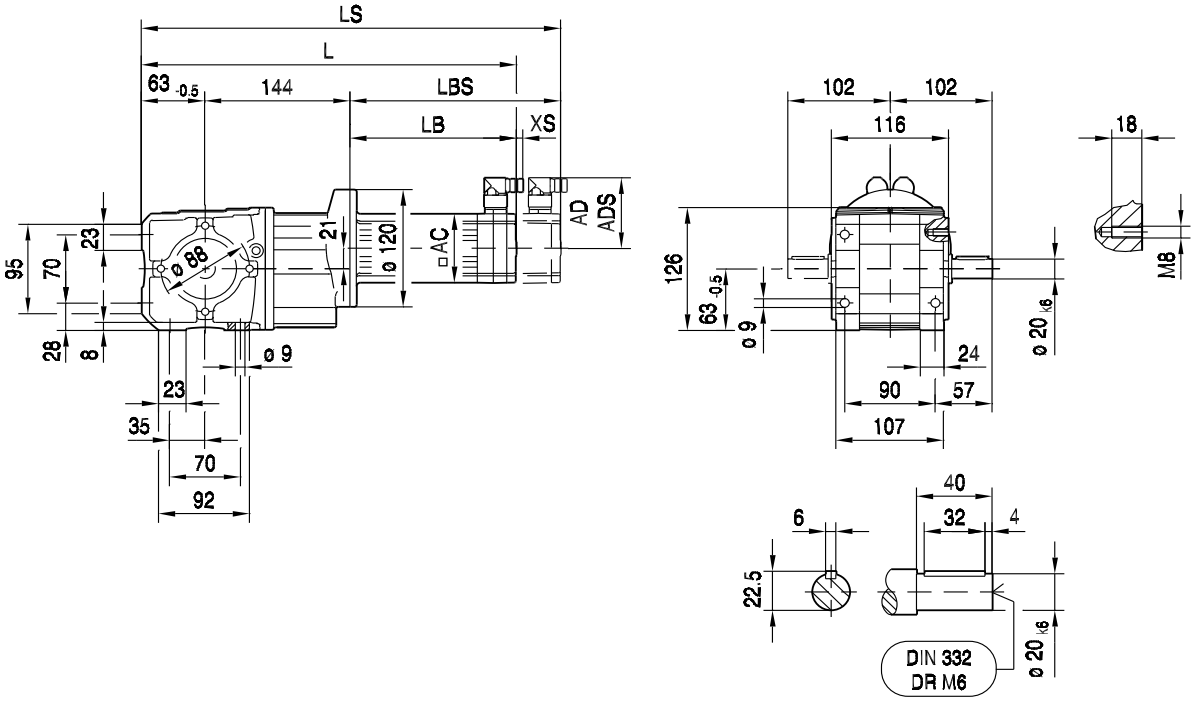

WA37B..

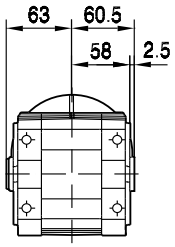

ø 25 H7
DIN 6885-3

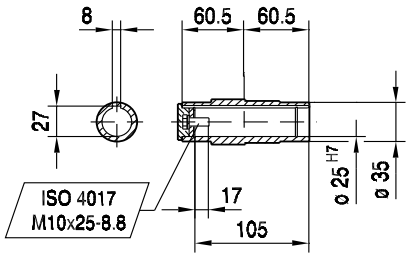

ø 20 H7

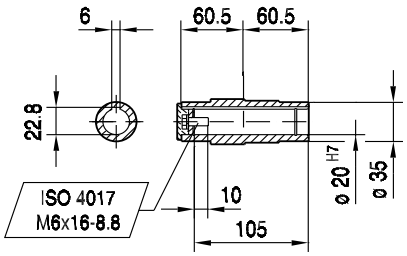

WH37B..

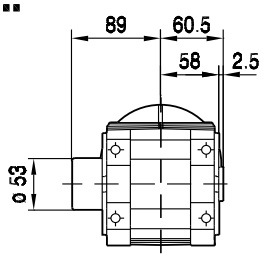

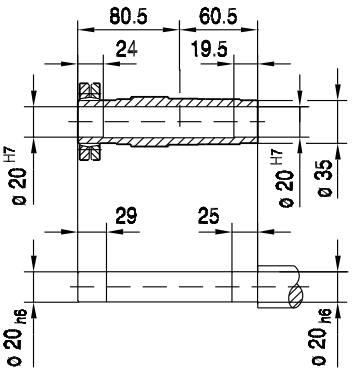

(→ 144)	CMP40M	CMP50S	CMP50M	CMP50L	CMP63S	CMP63M	CMP63L	CMP71S	CMP71M
AC	57	73	73	73	88	88	88	115	115
AD	78	86	86	86	92	92	92	102	102
ADS	78	86	86	86	92	92	92	104	104
L	350	352	391	430	387	437	490	379	407
LS	380	381	420	459	415	465	519	444	472
LB	143	145	184	223	180	230	283	172	200
LBS	173	174	213	252	208	258	312	237	265
XS	19	18	18	18	14	14	14	11	11

20 032 00 07

WF37..

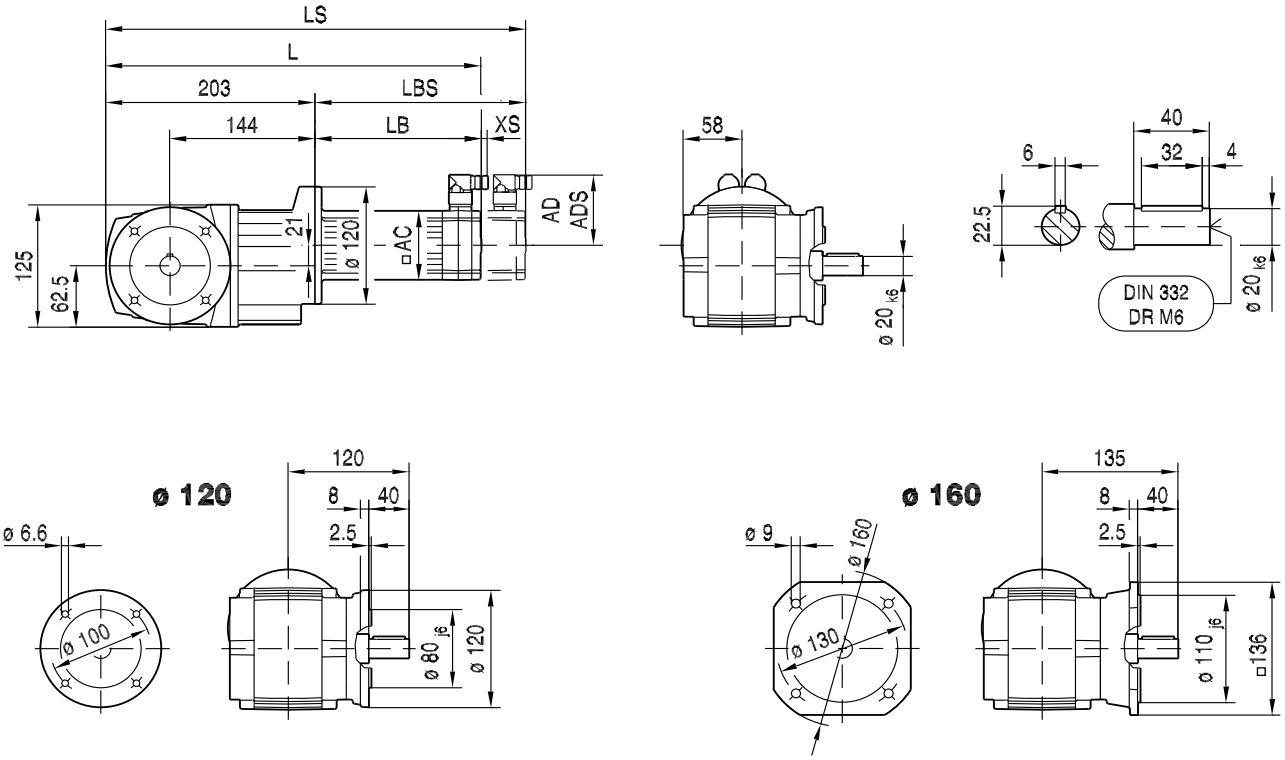

WAF37..

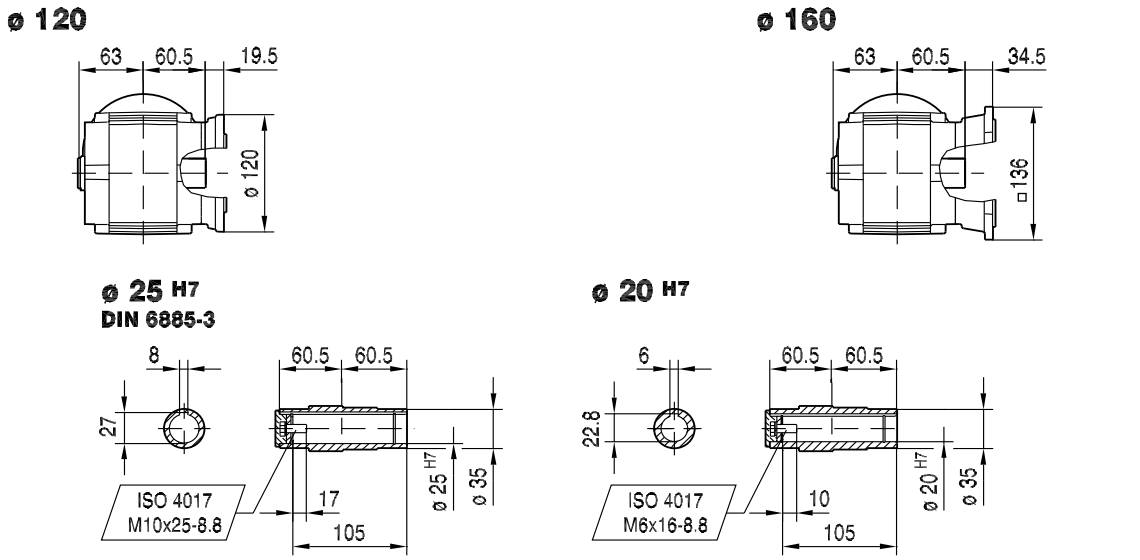

(→ 📖 144)	CMP40M	CMP50S	CMP50M	CMP50L	CMP63S	CMP63M	CMP63L	CMP71S	CMP71M
AC	57	73	73	73	88	88	88	115	115
AD	78	86	86	86	92	92	92	102	102
ADS	78	86	86	86	92	92	92	104	104
L	346	348	387	426	383	433	486	375	403
LS	376	377	416	455	411	461	515	440	468
LB	143	145	184	223	180	230	283	172	200
LBS	173	174	213	252	208	258	312	237	265
XS	19	18	18	18	14	14	14	11	11

20 033 00 07

WHF37..

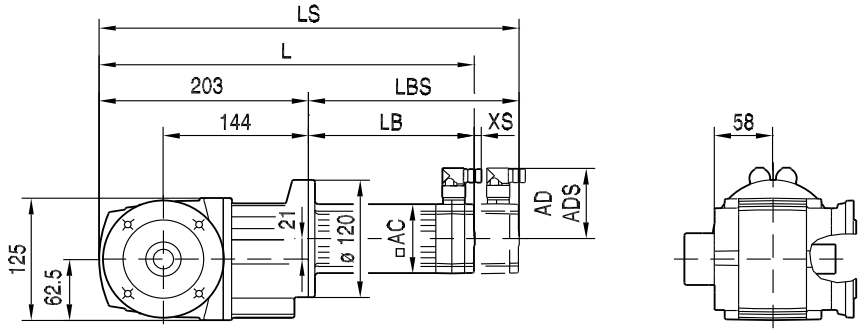

ø 120

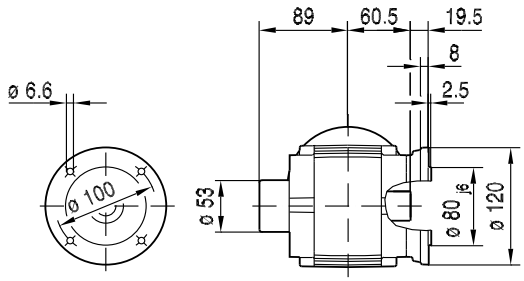

ø 160

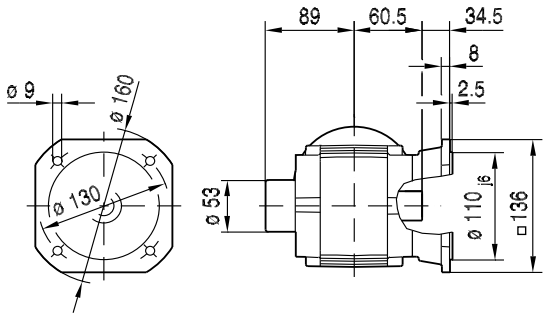

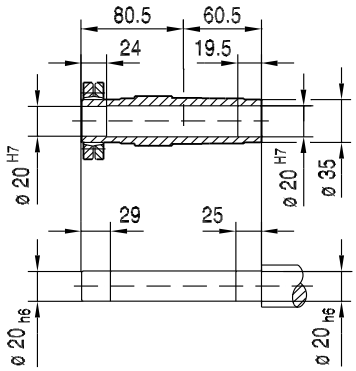

(→ 📖 144)	CMP40M	CMP50S	CMP50M	CMP50L	CMP63S	CMP63M	CMP63L	CMP71S	CMP71M
AC	57	73	73	73	88	88	88	115	115
AD	78	86	86	86	92	92	92	102	102
ADS	78	86	86	86	92	92	92	104	104
L	346	348	387	426	383	433	486	375	403
LS	376	377	416	455	411	461	515	440	468
LB	143	145	184	223	180	230	283	172	200
LBS	173	174	213	252	208	258	312	237	265
XS	19	18	18	18	14	14	14	11	11

20 034 00 07

WA37..

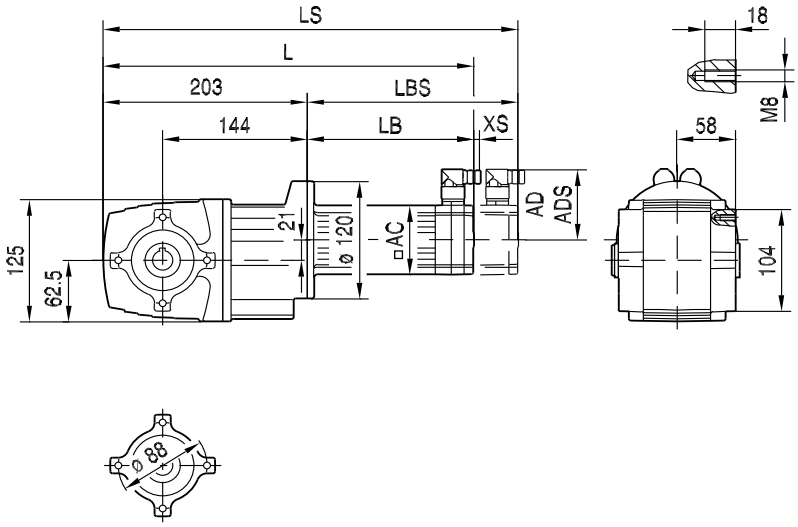

W../T..

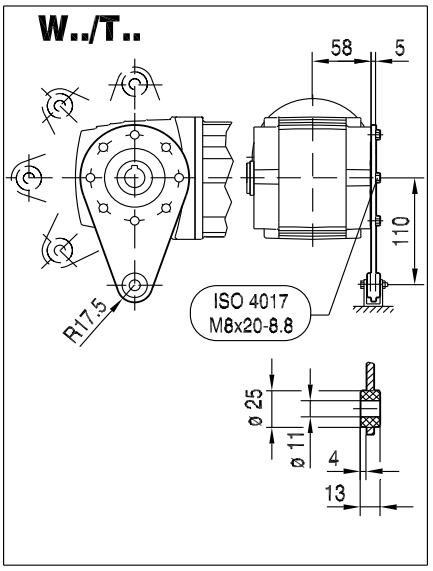

WA37..

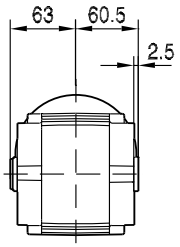

ø 25 H7
DIN 6885-3

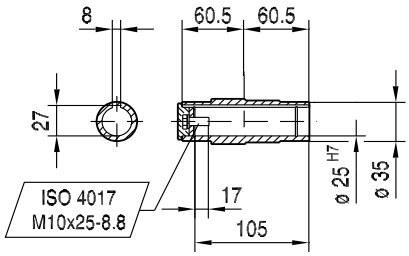

ø 20 H7

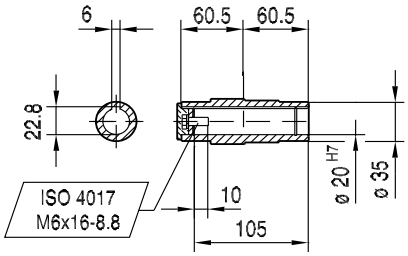

WH37..

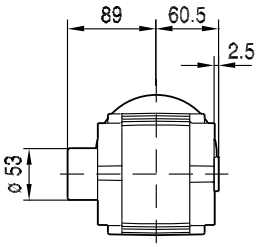

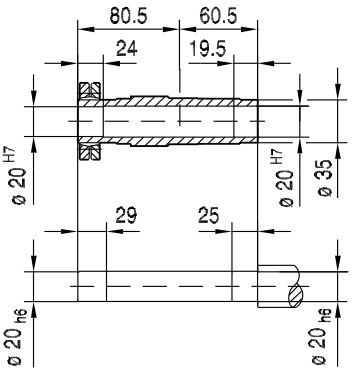

(→ 144)	CMP40M	CMP50S	CMP50M	CMP50L	CMP63S	CMP63M	CMP63L	CMP71S	CMP71M
AC	57	73	73	73	88	88	88	115	115
AD	78	86	86	86	92	92	92	102	102
ADS	78	86	86	86	92	92	92	104	104
L	346	348	387	426	383	433	486	375	403
LS	376	377	416	455	411	461	515	440	468
LB	143	145	184	223	180	230	283	172	200
LBS	173	174	213	252	208	258	312	237	265
XS	19	18	18	18	14	14	14	11	11

20 035 00 07

WT37..

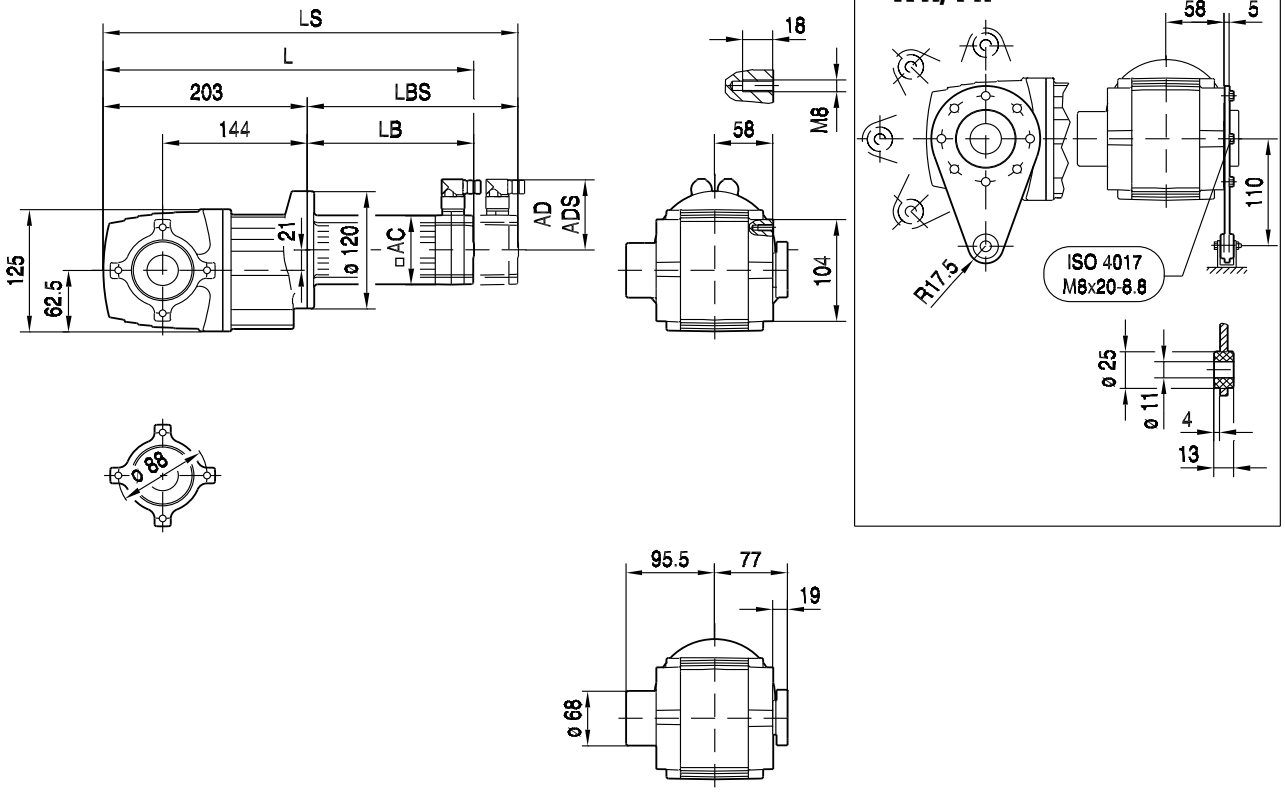

(→ 📖 144)	CMP40M	CMP50S	CMP50M	CMP50L	CMP63S	CMP63M	CMP63L	CMP71S	CMP71M
AC	57	73	73	73	88	88	88	115	115
AD	78	86	86	86	92	92	92	102	102
ADS	78	86	86	86	92	92	92	104	104
L	346	348	387	426	383	433	486	375	403
LS	376	377	416	455	411	461	515	440	468
LB	143	145	184	223	180	230	283	172	200
LBS	173	174	213	252	208	258	312	237	265
XS	19	18	18	18	14	14	14	11	11

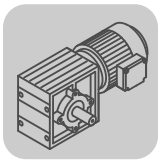

12.2.2 W 47

M_{aDyn} [Nm]		CMP									
	i	50S	50M	50L	63S	63M	63L	71S	71M	71L	80S
W47 2	3.27	16	32	48	34	66	94	60	96	>132	131
	3.89	19	38	57	41	79	112	71	114	>132	>132
	4.40	22	43	64	46	89	127	80	129	>132	>132
	5.23	26	51	77	55	106	>132	95	>132	>132	>132
	5.58	28	55	82	59	113	>132	102	>132	>132	>132
	6.53	32	63	95	68	131	>132	118	>132	>132	>132
	7.32	36	71	106	76	>132	>132	>132	>132	>132	>132
	8.61	42	83	125	90	>132	>132	>132	>132		
	9.96	49	96	>132	104	>132		>132			
	10.66	52	103	>132	111	>132		>132			
	11.32	52	103	153	111	>192	>192	191	>192	>192	>192
	12.30	59	118		127						
	13.44	62	122	182	131	>192	>192	>192	>192	>192	>192
	14.35	65	129	>192	139	>192	>192	>192	>192	>192	>192
	16.80	76	151	>192	162	>192	>192	>192	>192	>192	>192
	18.82	84	167	>192	180	>192	>192	>192	>192	>192	>192
	22.15	99	>192	>192	>192	>192	>192	>192	>192		
	25.07	103	200	>215	>215	>215	>215	>215	>215	>215	>215
	25.62	113	>192	>192	>192	>192		>192			
	26.76	110	>215	>215	>215	>215	>215	>215	>215	>215	>215
	27.41	121	>192	>192	>192	>192		>192			
	31.33	127	>215	>215	>215	>215	>215	>215	>215	>215	>215
	31.62	138	>192		>192						
	35.09	141	>215	>215	>215	>215	>215	>215	>215	>215	>215
	41.30	163	>215	>215	>215	>215	>215	>215	>215		
	47.78	186	>215	>215	>215	>215		>215			
	51.12	197	>215	>215	>215	>215		>215			
	58.98	>215	>215		>215						
	68.93	>215									
	74.98	>215									

→ 📖 144

m [kg]		CMP									
	s	50S	50M	50L	63S	63M	63L	71S	71M	71L	80S
W47	2	15	16	16	17	18	20	20	21	23	26
WF: + 0.5 kg / WA: + -1.5 kg / WAF: + -0.7 kg											

CMP..	i	n_{epk} [1/min]	η [%]	c_{TG} W [Nm/°]	WF [Nm/°]	WA [Nm/°]	WAF [Nm/°]
W47 2	3.27	4500	95	-	-	-	-
	3.89	4500	95	-	-	-	-
	4.40	4500	95	-	-	-	-
	5.23	4500	95	-	-	-	-
	5.58	4500	95	-	-	-	-
	6.53	4500	94	-	-	-	-
	7.32	4500	94	-	-	-	-
	8.61	4500	94	-	-	-	-
	9.96	4500	94	-	-	-	-
	10.66	4500	94	-	-	-	-
	11.32	4500	88	-	-	-	-
	12.30	4500	93	-	-	-	-
	13.44	4500	88	-	-	-	-
	14.35	4500	87	-	-	-	-
	16.80	4500	87	-	-	-	-
	18.82	4500	86	-	-	-	-
	22.15	4500	86	-	-	-	-
	25.07	4500	79	-	-	-	-
	25.62	4500	85	-	-	-	-
	26.76	4500	79	-	-	-	-
	27.41	4500	85	-	-	-	-
	31.33	4500	78	-	-	-	-
	31.62	4500	84	-	-	-	-
	35.09	4500	77	-	-	-	-
	41.30	4500	76	-	-	-	-
	47.78	4500	75	-	-	-	-
	51.12	4500	74	-	-	-	-
	58.98	4500	73	-	-	-	-
	68.93	4500	72	-	-	-	-
	74.98	4500	71	-	-	-	-

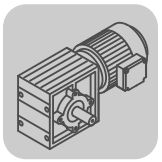

W..CMP
W..[mm]

CMP..							F_{Ramax}				F_{Rapk}			
n_e = 1400	i	M_{amax} [Nm]	M_{apk} [Nm]	$M_{aNotaus}$ [Nm]	n_{ak} [1/min]	J_G 10^{-4} [kgm^2]	W [N]	WF [N]	WA [N]	WAF [N]	W [N]	WF [N]	WA [N]	WAF [N]
W47 2	3.27	110	132	198	2141	8.3	2690	3170	2440	2440	6990	7910	8000	8000
	3.89	110	132	198	1799	5.9	2900	3390	2640	2640	6990	7910	8000	8000
	4.40	110	132	198	1591	4.7	3050	3560	2790	2790	6990	7910	8000	8000
	5.23	110	132	198	1338	3.3	3270	3810	3010	3010	6990	7910	8000	8000
	5.58	110	132	198	1254	2.9	3360	3900	3090	3090	6990	7910	8000	8000
	6.53	110	132	198	1072	2.1	3580	4140	3310	3310	6990	7910	8000	8000
	7.32	110	132	198	956	1.7	3750	4330	3470	3470	6990	7910	8000	8000
	8.61	110	132	198	813	1.2	4000	4600	3720	3720	6990	7910	8000	8000
	9.96	110	132	198	703	0.96	4240	4860	3950	3950	6990	7910	8000	8000
	10.66	110	132	198	657	0.84	4350	4980	4060	4060	6990	7910	8000	8000
	11.32	160	192	285	292	1.6	3500	4350	2980	2980	6470	7600	8000	8000
	12.30	110	132	198	569	0.65	4600	5250	4300	4300	6990	7910	8000	8000
	13.44	160	192	285	171	1.2	3810	4680	3280	3280	6470	7600	8000	8000
	14.35	160	192	285	453	1.1	3930	4810	3400	3400	6470	7600	8000	8000
	16.80	160	192	285	286	0.77	4230	5140	3690	3690	6470	7600	8000	8000
	18.82	160	192	285	197	0.63	4460	5390	3920	3920	6470	7600	8000	8000
	22.15	160	192	285	307	0.46	4800	5770	4250	4250	6470	7600	8000	8000
	25.07	180	215	320	68	0.93	4490	5610	3800	3800	6160	7430	8000	8000
	25.62	160	192	285	195	0.37	5130	6120	4570	4570	6470	7600	8000	8000
	26.76	180	215	320	67	0.82	4640	5770	3940	3940	6160	7430	8000	8000
	27.41	160	192	285	157	0.33	5280	6290	4720	4720	6470	7600	8000	8000
	31.33	180	215	320	54	0.60	5010	6180	4310	4310	6160	7430	8000	8000
	31.62	160	192	285	221	0.26	5620	6660	5050	5050	6470	7600	8000	8000
	35.09	180	215	320	125	0.49	5290	6490	4580	4580	6160	7430	8000	8000
	41.30	180	215	320	77	0.36	5720	6950	4990	4990	6160	7430	8000	8000
	47.78	180	215	320	48	0.29	6110	7380	5380	5380	6160	7430	8000	8000
	51.12	180	215	320	102	0.26	6300	7580	5570	5570	6160	7430	8000	8000
	58.98	180	215	320	66	0.21	6500	7580	5980	5980	6160	7430	8000	8000
	68.93	180	215	320	41	0.16	6500	7580	6450	6450	6160	7430	8000	8000
	74.98	180	215	320	32	0.14	6500	7580	6710	6710	6160	7430	8000	8000

20 075 00 09

W47..

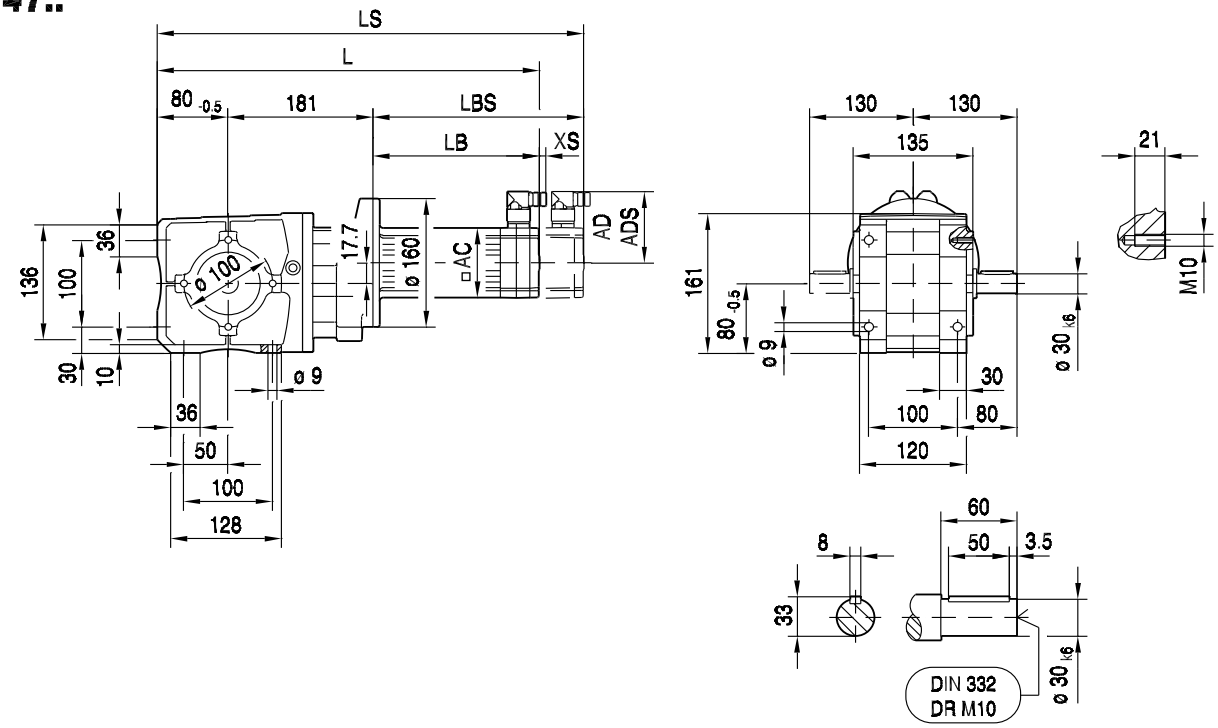

WA47B..

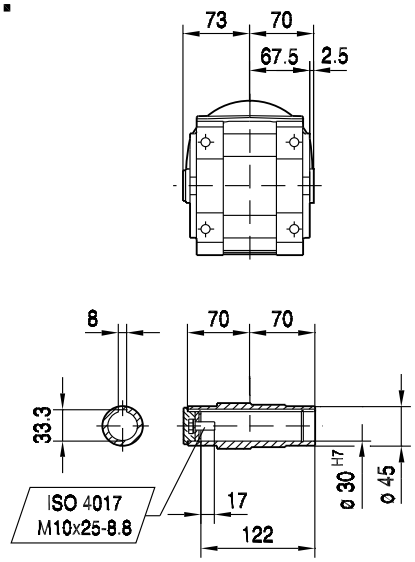

WH47B..

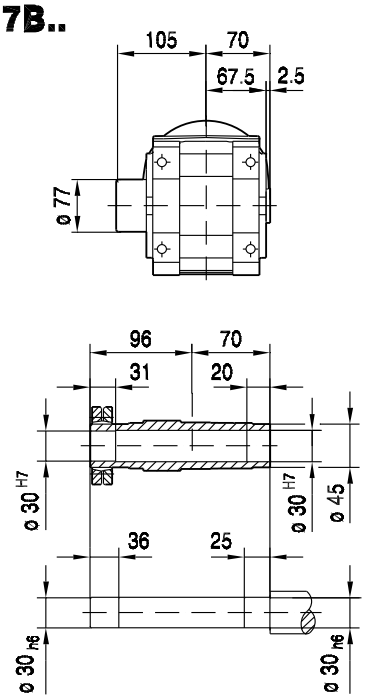

(→ 📖 144)	CMP50S	CMP50M	CMP50L	CMP63S	CMP63M	CMP63L	CMP71S	CMP71M	CMP71L	CMP80S
AC	73	73	73	88	88	88	115	115	115	137
AD	86	86	86	92	92	92	102	102	102	134
ADS	86	86	86	92	92	92	104	104	104	137
L	400	439	478	434	484	534	427	452	502	467
LS	429	468	507	463	513	563	492	517	567	545
LB	139	178	217	173	223	273	166	191	241	206
LBS	168	207	246	202	252	302	231	256	306	284
XS	18	18	18	14	14	14	11	11	11	37

20 076 00 09

WF47..

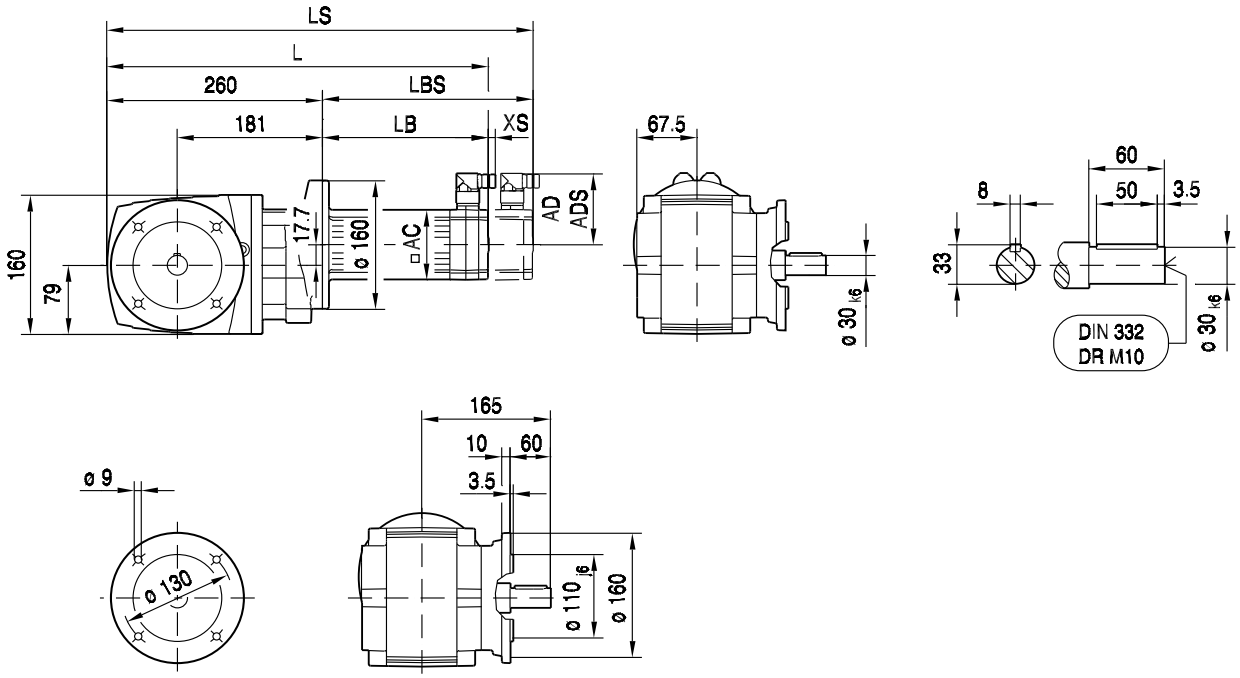

WAF47..

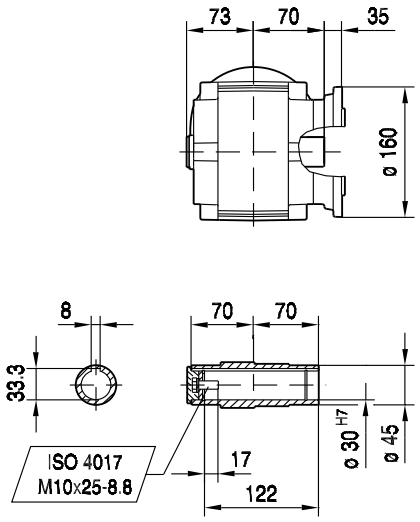

WHF47..

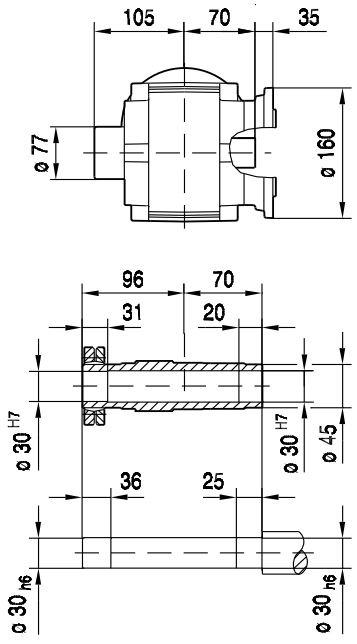

(→ 📖 144)	CMP50S	CMP50M	CMP50L	CMP63S	CMP63M	CMP63L	CMP71S	CMP71M	CMP71L	CMP80S
AC	73	73	73	88	88	88	115	115	115	137
AD	86	86	86	92	92	92	102	102	102	134
ADS	86	86	86	92	92	92	104	104	104	137
L	399	438	477	433	483	533	426	451	501	466
LS	428	467	506	462	512	562	491	516	566	544
LB	139	178	217	173	223	273	166	191	241	206
LBS	168	207	246	202	252	302	231	256	306	284
XS	18	18	18	14	14	14	11	11	11	37

20 077 00 09

WA47..

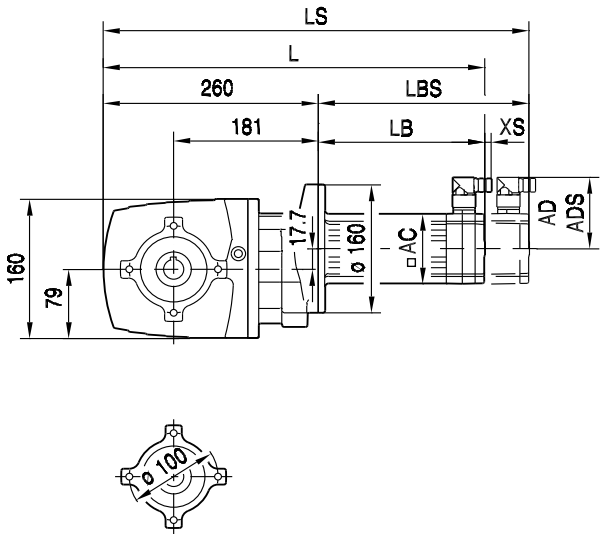

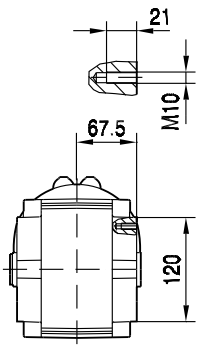

W../T..

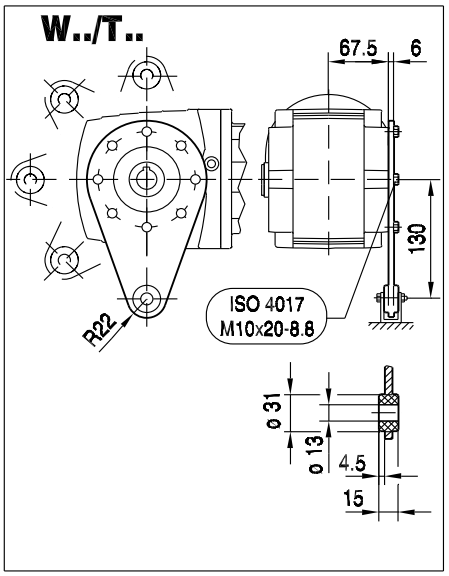

WA47..

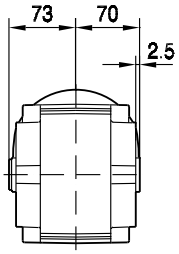

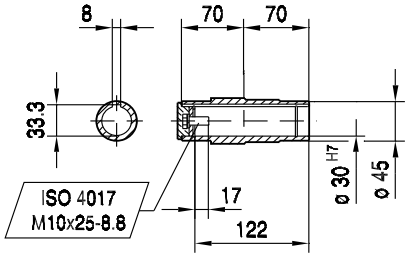

WH47..

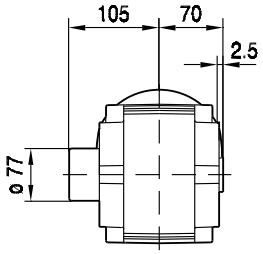

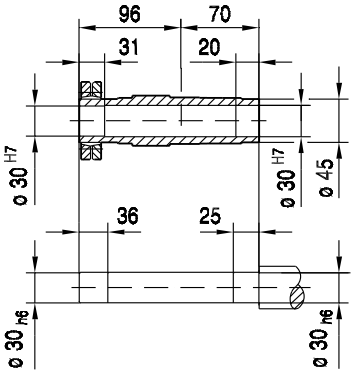

(→ 144)	CMP50S	CMP50M	CMP50L	CMP63S	CMP63M	CMP63L	CMP71S	CMP71M	CMP71L	CMP80S
AC	73	73	73	88	88	88	115	115	115	137
AD	86	86	86	92	92	92	102	102	102	134
ADS	86	86	86	92	92	92	104	104	104	137
L	399	438	477	433	483	533	426	451	501	466
LS	428	467	506	462	512	562	491	516	566	544
LB	139	178	217	173	223	273	166	191	241	206
LBS	168	207	246	202	252	302	231	256	306	284
XS	18	18	18	14	14	14	11	11	11	37

20 078 00 09

WT47..

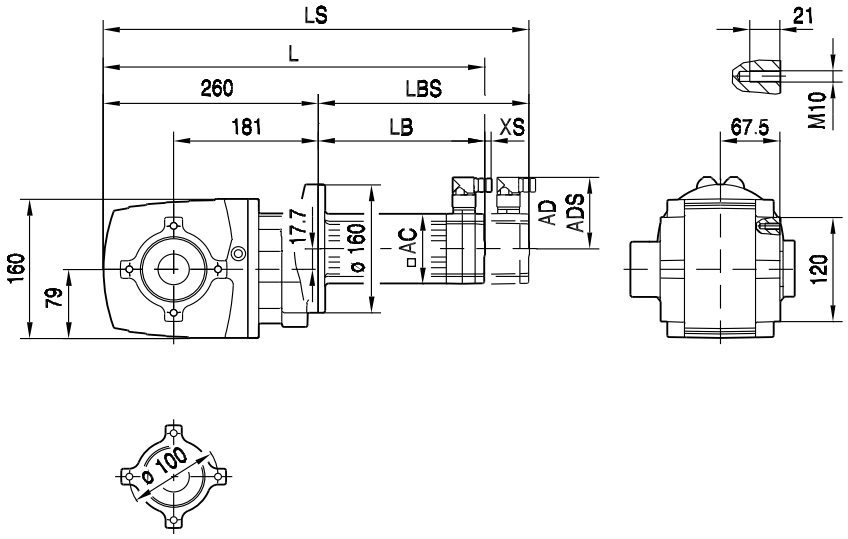

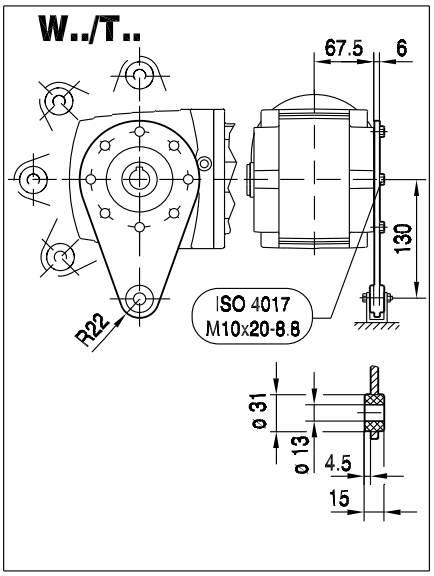

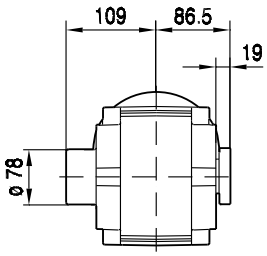

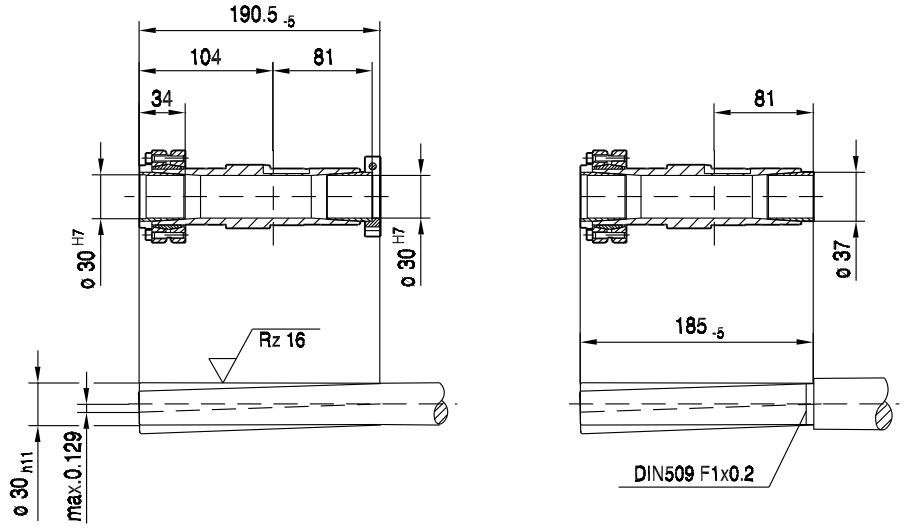

(→ 📖 144)	CMP50S	CMP50M	CMP50L	CMP63S	CMP63M	CMP63L	CMP71S	CMP71M	CMP71L	CMP80S
AC	73	73	73	88	88	88	115	115	115	137
AD	86	86	86	92	92	92	102	102	102	134
ADS	86	86	86	92	92	92	104	104	104	137
L	399	438	477	433	483	533	426	451	501	466
LS	428	467	506	462	512	562	491	516	566	544
LB	139	178	217	173	223	273	166	191	241	206
LBS	168	207	246	202	252	302	231	256	306	284
XS	18	18	18	14	14	14	11	11	11	37

13 BS.F..CMP

13.1 BSF, BSBF, BSKF, BSHF, BSF..B, BSBF..B, BSKF..B, BSHF..B, BSHF../T, BSHF../I, BSHF..B/I..CMP

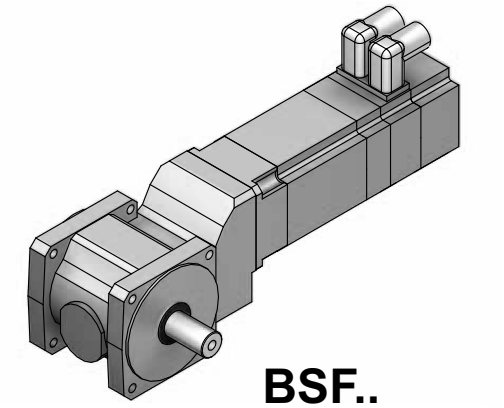

BSF..

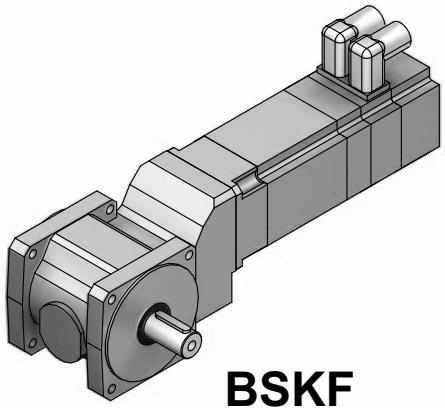

BSKF

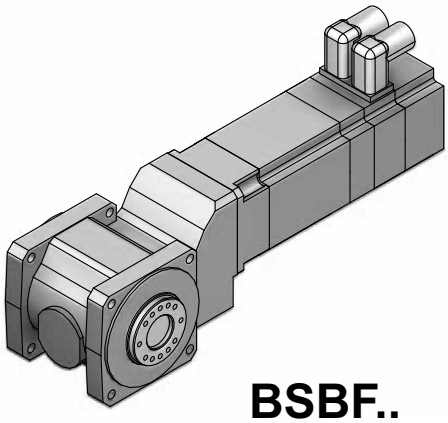

BSBF..

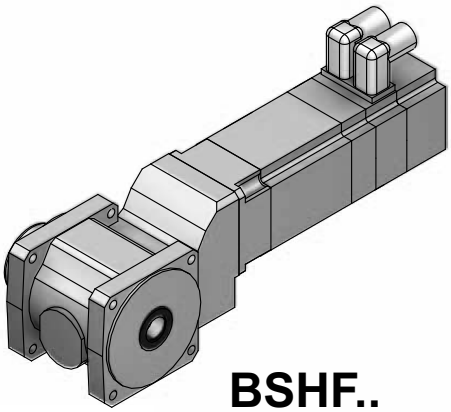

BSHF..

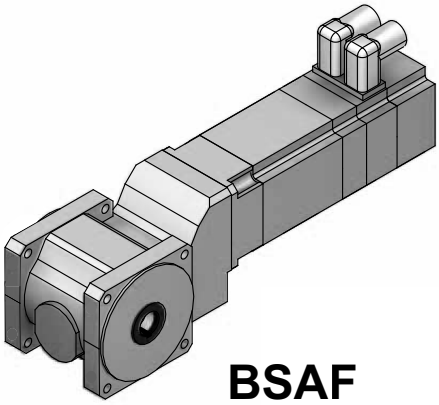

BSAF

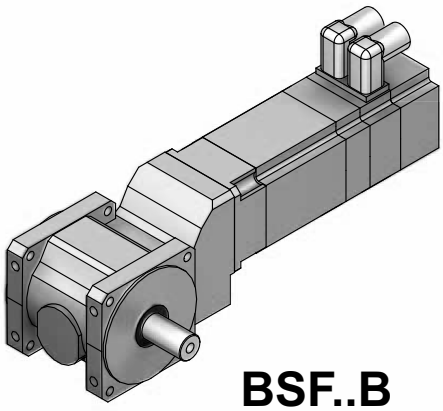

BSF..B

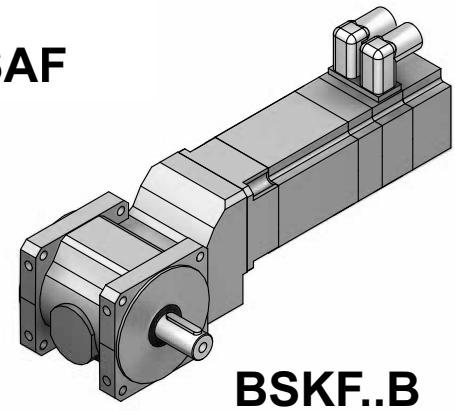

BSKF..B

67760axx

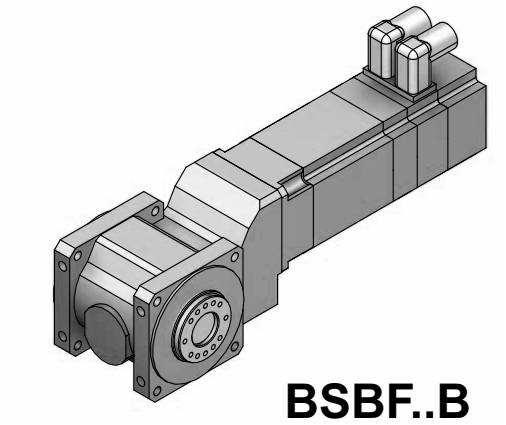

BSBF..B

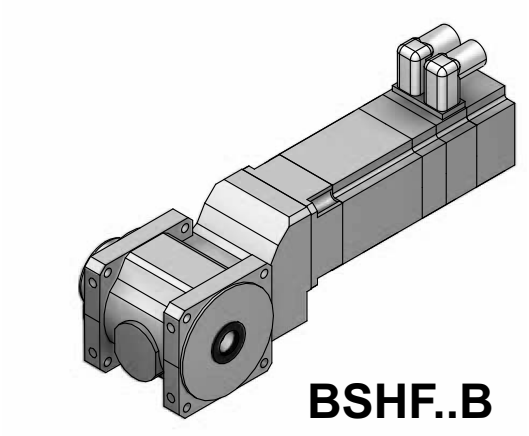

BSHF..B

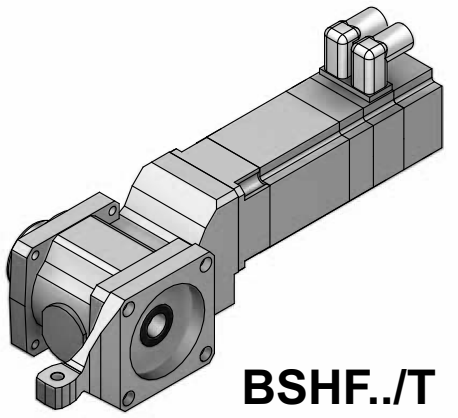

BSHF../T

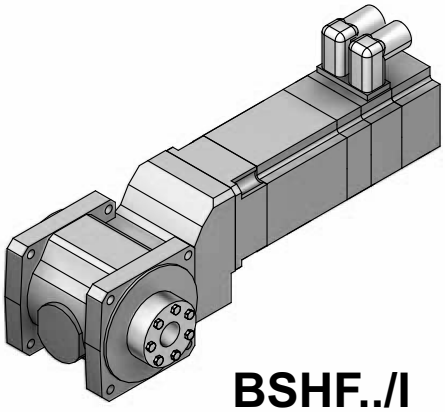

BSHF../I

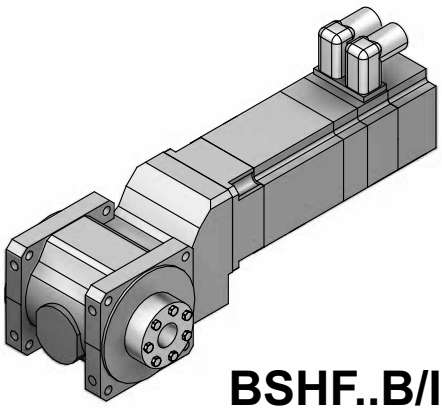

BSHF..B/I

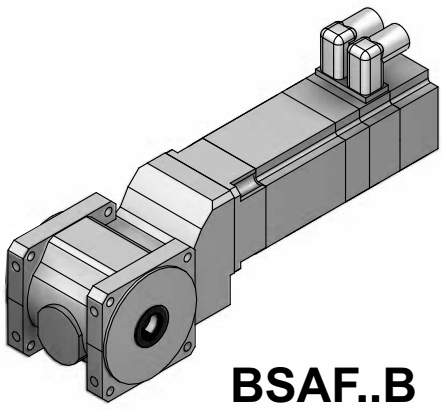

BSAF..B

67761axx

13.2 BS.F..[mm]

13.2.1 BS.F 202

M_{aDyn} [Nm]		CMP		
	i	50S	50M	63S
BSF202 2	3.00	15	29	31
	4.00	19	39	42
	6.00	29	58	>60
	8.00	39	>60	>60
	10.00	47	>51	>51
	15.00	>51	>51	>51
	20.00	>51	>51	>51
	25.00	>51		

→ 144

m [kg]		CMP		
	s	50S	50M	63S
BSF202	2	7.2	8.1	8.5
BSBF: + 0.0 kg / BSHF: + 0.0 kg				

CMP..				M1			M2;M4			M3;M5-6			φ		
	i	n_{epk} [1/min]	η [%]	a_0	a_1	a_2	a_0	a_1	a_2	a_0	a_1	a_2	[']	/R [']	/M [']
BSF202 2	3.00	4500	93.7	4.10	-0.011	77457	14.47	-0.020	66498	6.12	-0.013	75323	6	3	-
	4.00	4500	93.7	4.26	-0.014	76815	20.11	-0.028	60846	7.52	-0.017	73532	6	3	-
	6.00	4500	93.7	4.50	-0.019	75905	30.66	-0.042	51203	10.05	-0.024	70662	6	3	-
	8.00	4500	93.8	4.70	-0.022	75309	37.13	-0.052	46240	12.10	-0.029	68596	6	3	-
	10.00	4500	90.1	3.31	-0.057	47656	52.73	-0.146	26432	19.70	-0.083	39837	6	3	-
	15.00	4500	90.2	4.09	-0.076	46683	56.52	-0.189	28536	31.62	-0.125	34857	6	3	-
	20.00	4500	90.3	3.77	-0.089	46508	53.03	-0.210	32477	42.49	-0.161	30764	6	3	-
	25.00	4500	90.5	3.67	-0.098	46334	47.99	-0.221	36133	51.81	-0.191	27469	6	3	-

CMP..							c_T			F_{Ramax}			F_{Rapk}		
n_e = 1500	i	M_{amax} [Nm]	M_{apk} [Nm]	$M_{aNotaus}$ [Nm]	n_{ak} [1/min]	J_{GA} 10^{-4} [kgm^2]	BSF [Nm/']	BSBF [Nm/']	BSHF [Nm/']	BSF [N]	BSBF [N]	BSHF [N]	BSF [N]	BSBF [N]	BSHF [N]
BSF202 2	3.00	40	60	90	767	0.76	2.1	2.3	2.3	2680	2970	2600	4200	4200	4200
	4.00	40	60	90	775	0.47	2.2	2.4	2.4	3000	3330	2900	4200	4200	4200
	6.00	40	60	90	783	0.23	2.2	2.5	2.5	3500	3880	3390	4200	4200	4200
	8.00	40	60	90	875	0.14	2.3	2.5	2.5	3900	4200	3780	4200	4200	4200
	10.00	40	51	77	320	0.27	4.1	4.7	4.7	4150	4200	4020	4200	4200	4200
	15.00	40	51	77	327	0.14	4.2	4.8	4.7	4200	4200	4200	4200	4200	4200
	20.00	40	51	77	350	0.092	4.2	4.8	4.7	4200	4200	4200	4200	4200	4200
	25.00	40	51	77	280	0.066	4.2	4.8	4.8	4200	4200	4200	4200	4200	4200

BSF202..

55 002 00 06

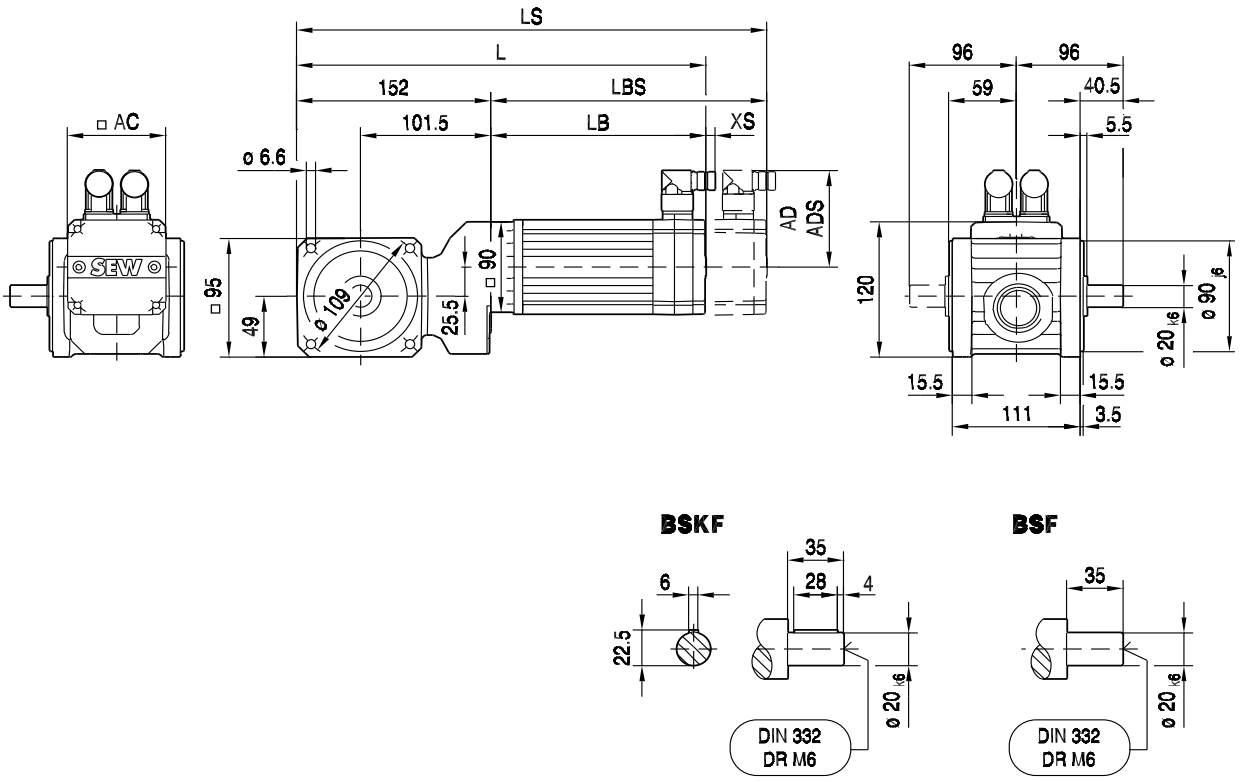

(→ 144)	CMP50S	CMP50M	CMP63S					
AC	73	73	88					
AD	86	86	92					
ADS	86	86	92					
L	298	337	333					
LS	326	365	361					
LB	146	185	181					
LBS	175	214	210					
XS	18	18	14					

BSBF202..

55 003 00 06

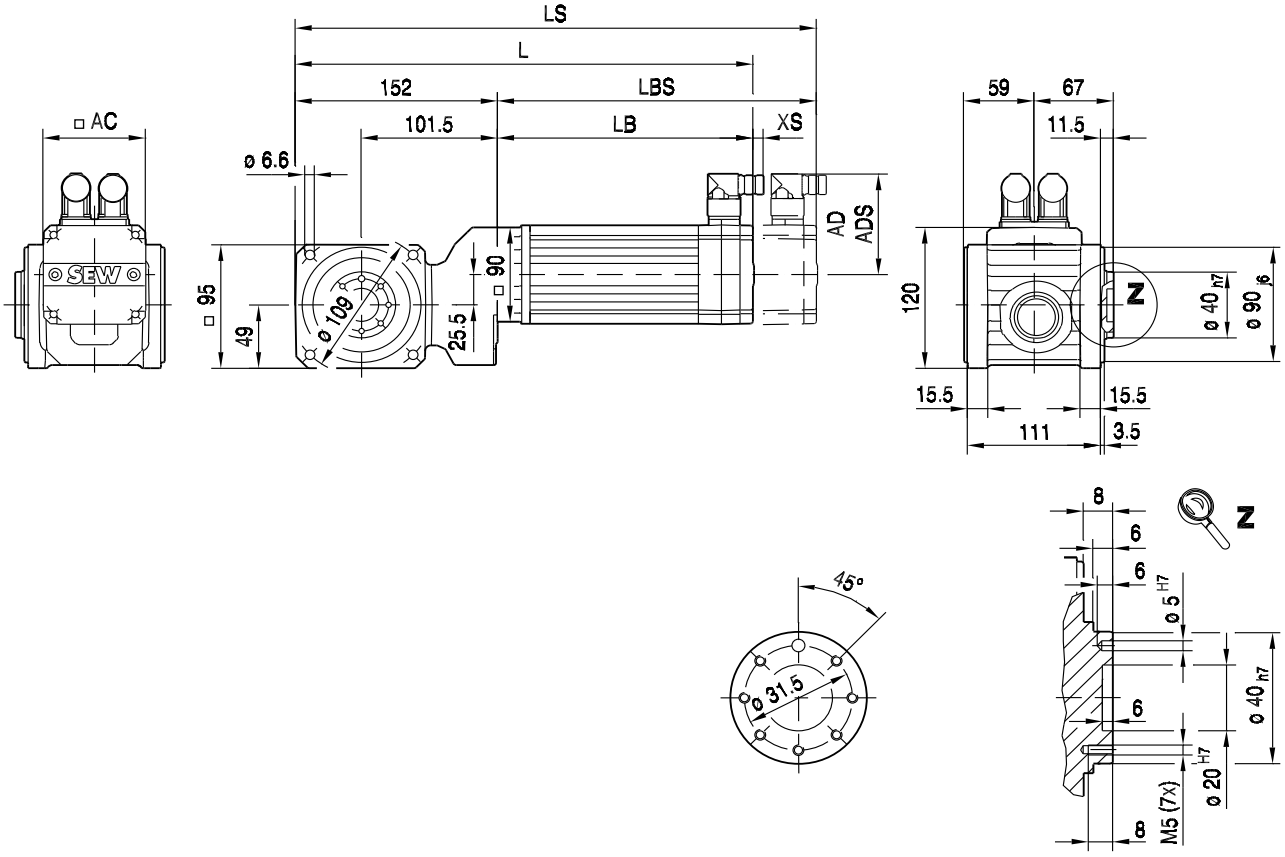

(→ 144)	CMP50S	CMP50M	CMP63S					
AC	73	73	88					
AD	86	86	92					
ADS	86	86	92					
L	298	337	333					
LS	326	365	361					
LB	146	185	181					
LBS	175	214	210					
XS	18	18	14					

BSHF202..

55 004 00 06

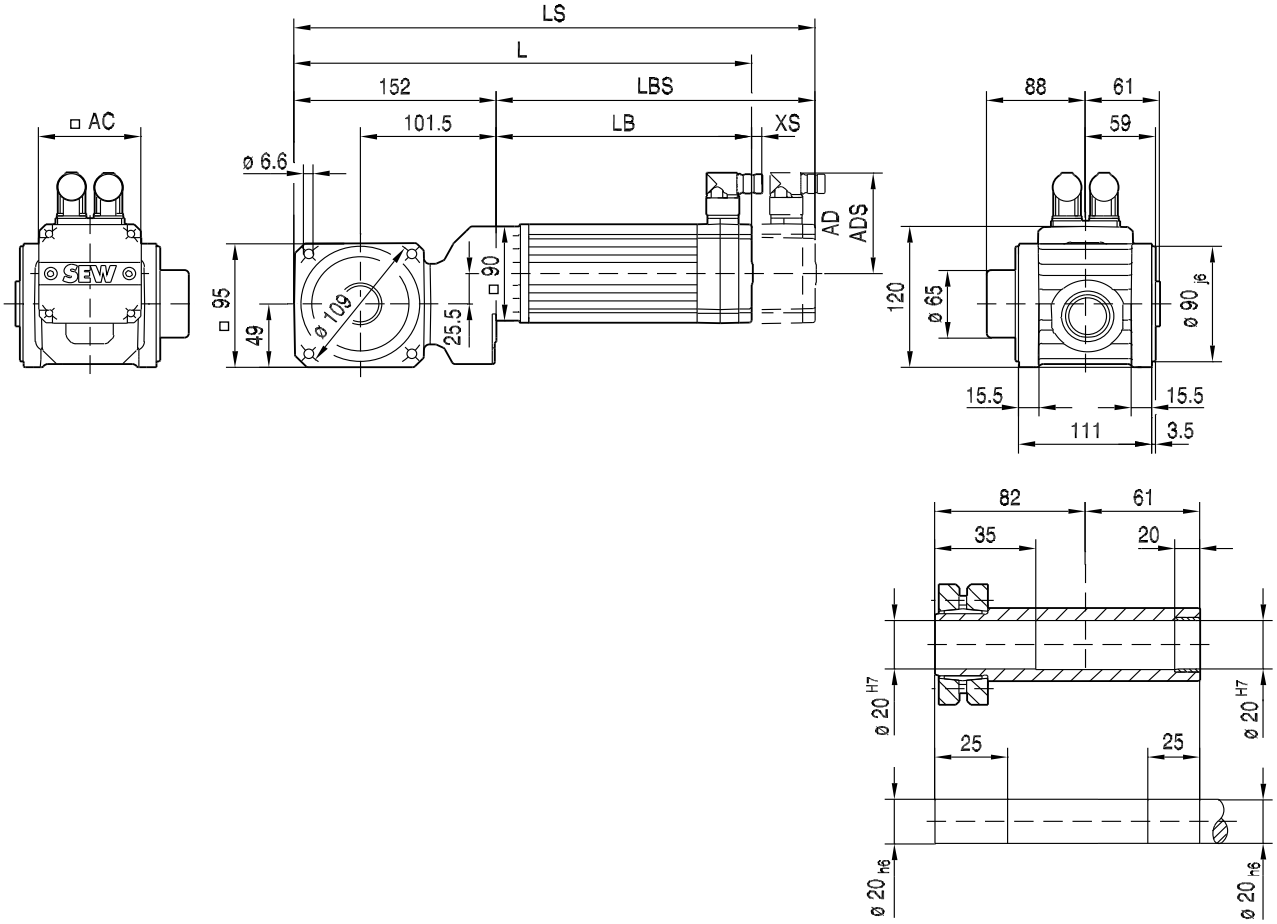

(→ 144)	CMP50S	CMP50M	CMP63S					
AC	73	73	88					
AD	86	86	92					
ADS	86	86	92					
L	298	337	333					
LS	326	365	361					
LB	146	185	181					
LBS	175	214	210					
XS	18	18	14					

BSHF202/I..

55 005 00 06

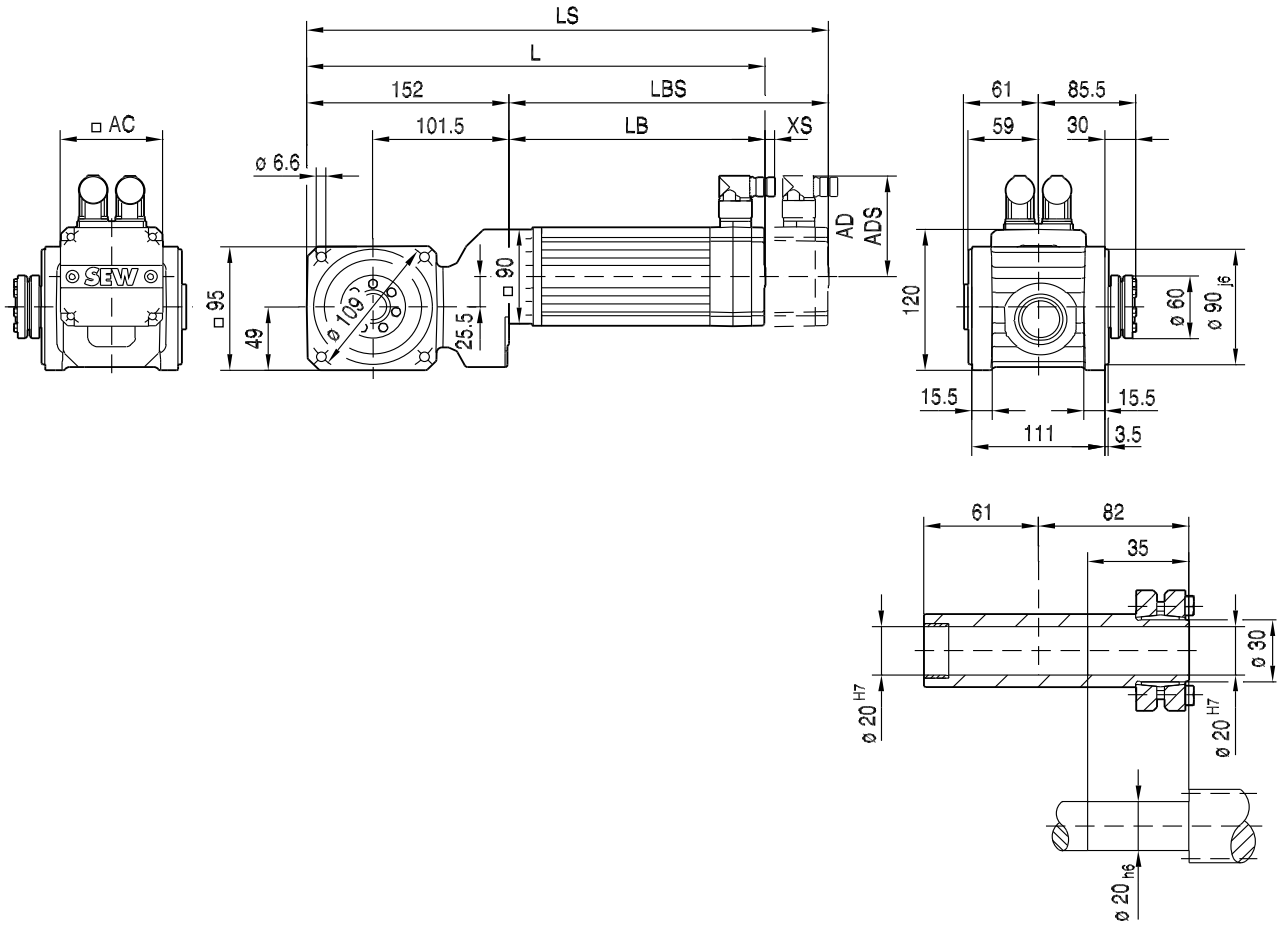

(→ 144)	CMP50S	CMP50M	CMP63S					
AC	73	73	88					
AD	86	86	92					
ADS	86	86	92					
L	298	337	333					
LS	326	365	361					
LB	146	185	181					
LBS	175	214	210					
XS	18	18	14					

BSAF202..

55 015 00 07

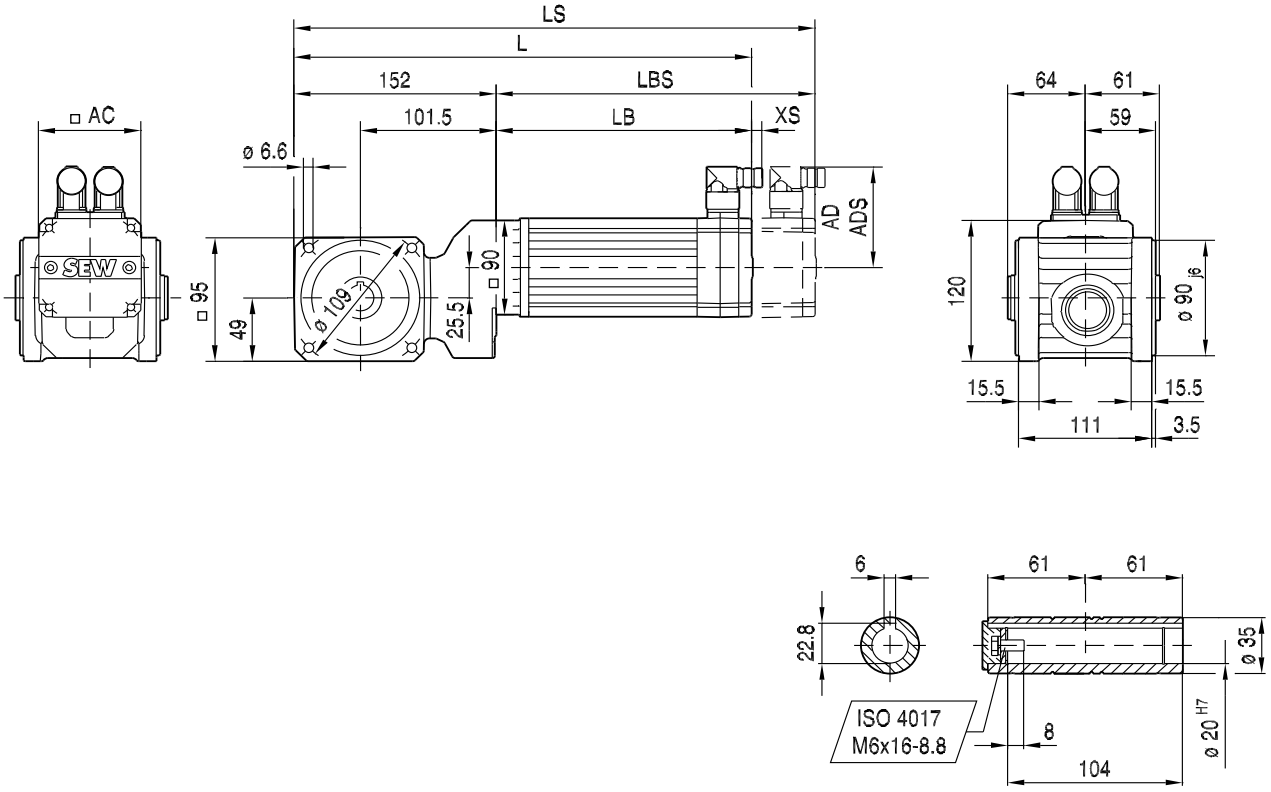

(→ 144)	CMP50S	CMP50M	CMP63S					
AC	73	73	88					
AD	86	86	92					
ADS	86	86	92					
L	298	337	333					
LS	326	365	361					
LB	146	185	181					
LBS	175	214	210					
XS	18	18	14					

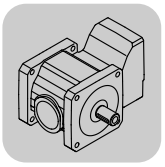

13.2.2 BS.F 302

M_{aDyn} [Nm]		CMP							
	i	50S	50M	50L	63S	63M	63L	71S	71M
BSF302 2	3.00			43		60	86	54	87
	4.00	20	39	58	42	80	>114	72	>114
	6.00	29	58	87	63	>120	>120	108	>120
	8.00	39	78	116	84	>120		>120	
	10.00	47	93	>108	101	>108	>108	>108	>108
	15.00	71	>112	>112	>112	>112	>112	>112	>112
	20.00	95	>112	>112	>112	>112		>112	
	25.00	>112	>112		>112				
	30.00	>112							

→ 📖 144

m [kg]		CMP							
	s	50S	50M	50L	63S	63M	63L	71S	71M
BSF302	2	9.2	10	11	10	12	13	15	16
BSBF: + 0.3 kg / BSHF: + -0.1 kg									

CMP..				M1			M2;M4			M3;M5-6			φ		
	i	n_{epk} [1/min]	η [%]	a_0	a_1	a_2	a_0	a_1	a_2	a_0	a_1	a_2	[']	/R [']	/M [']
BSF302 2	3.00	4500	93.8	10.61	-0.020	101982	29.34	-0.039	87407	16.53	-0.026	97370	6	3	-
	4.00	4500	94	11.44	-0.025	100944	39.04	-0.054	80239	20.24	-0.034	94323	6	3	-
	6.00	4500	94	12.77	-0.033	99436	48.54	-0.075	75064	26.76	-0.048	89388	6	3	-
	8.00	4500	94.1	13.72	-0.038	98463	54.94	-0.091	72074	31.93	-0.059	85770	6	3	-
	10.00	4500	90.7	17.47	-0.106	60873	82.08	-0.261	41142	61.94	-0.192	43856	6	3	-
	15.00	4500	91	23.30	-0.146	58348	101.6	-0.363	38252	94.43	-0.295	33419	6	3	-
	20.00	4500	91.1	28.02	-0.176	56577	122.0	-0.451	33554	108.9	-0.358	30285	6	3	-
	25.00	4500	91.1	30.93	-0.198	55589	137.5	-0.520	30171	119.7	-0.407	28099	6	3	-
	30.00	4500	91.2	33.58	-0.216	54719	149.6	-0.574	27671	128.0	-0.446	26539	6	3	-

CMP..							c_T			F_{Ramax}			F_{Rapk}		
n_e = 1500	i	M_{amax} [Nm]	M_{apk} [Nm]	$M_{aNotaus}$ [Nm]	n_{ak} [1/min]	J_{GA} 10^{-4} [kgm^2]	BSF [Nm/']	BSBF [Nm/']	BSHF [Nm/']	BSF [N]	BSBF [N]	BSHF [N]	BSF [N]	BSBF [N]	BSHF [N]
BSF302 2	3.00	68	102	153	500	1.6	3.7	4.1	4.0	4520	4980	4380	4920	6000	5510
	4.00	76	114	171	375	0.97	4.0	4.4	4.3	4960	5460	4810	4750	6000	5420
	6.00	80	120	180	283	0.48	4.2	4.7	4.6	5160	6000	5560	4660	6000	5370
	8.00	80	120	180	313	0.29	4.4	4.8	4.7	5160	6000	5660	4660	6000	5370
	10.00	72	108	162	150	0.55	6.9	7.8	7.8	5230	6000	5700	4840	6000	5470
	15.00	80	112	168	107	0.29	6.9	7.8	7.7	5160	6000	5660	4780	6000	5440
	20.00	80	112	168	110	0.19	6.9	7.8	7.8	5160	6000	5660	4780	6000	5440
	25.00	80	112	168	108	0.13	7.0	7.9	7.8	5160	6000	5660	4780	6000	5440
	30.00	80	112	168	117	0.10	7.0	7.9	7.8	5160	6000	5660	4780	6000	5440

BSF302..

55 006 00 06

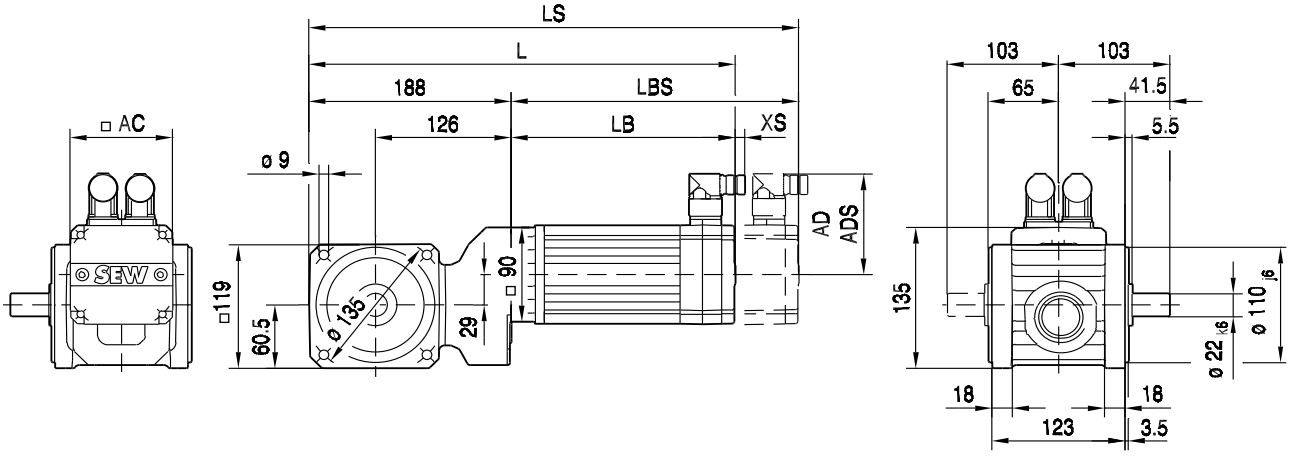

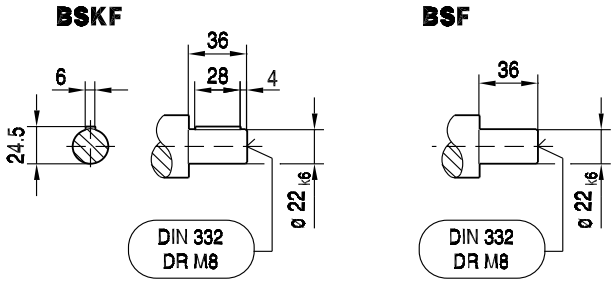

(→ 📖 144)	CMP50S	CMP50M	CMP50L	CMP63S	CMP63M	CMP63L	CMP71S	CMP71M
AC	73	73	73	88	88	88	115	115
AD	86	86	86	92	92	92	102	102
ADS	86	86	86	92	92	92	104	104
L	334	373	412	369	419	469	360	385
LS	363	402	441	397	447	497	425	450
LB	146	185	224	181	231	281	173	198
LBS	175	214	253	210	260	310	238	263
XS	18	18	18	14	14	14	11	11

BSBF302..

55 007 00 06

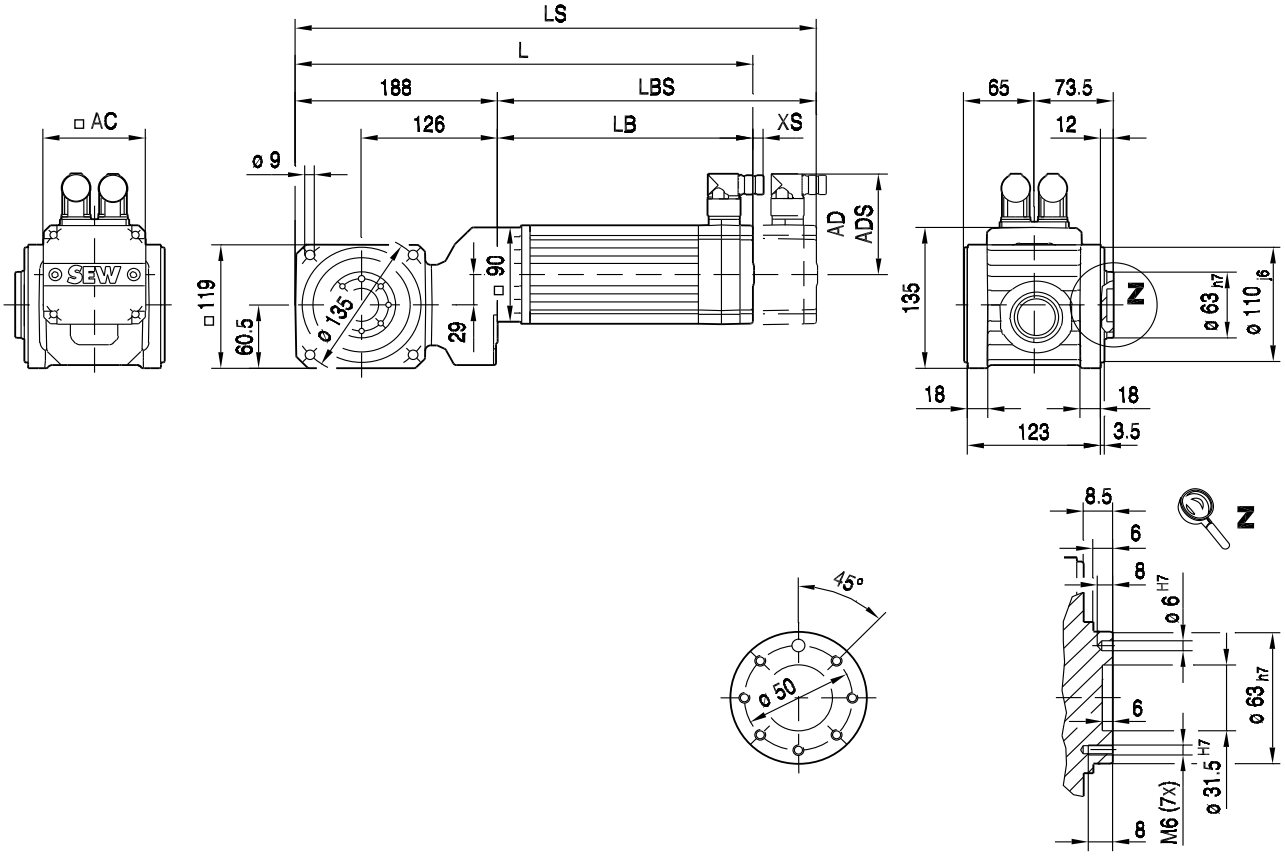

(→ 144)	CMP50S	CMP50M	CMP50L	CMP63S	CMP63M	CMP63L	CMP71S	CMP71M
AC	73	73	73	88	88	88	115	115
AD	86	86	86	92	92	92	102	102
ADS	86	86	86	92	92	92	104	104
L	334	373	412	369	419	469	360	385
LS	363	402	441	397	447	497	425	450
LB	146	185	224	181	231	281	173	198
LBS	175	214	253	210	260	310	238	263
XS	18	18	18	14	14	14	11	11

BSHF302..

55 008 00 06

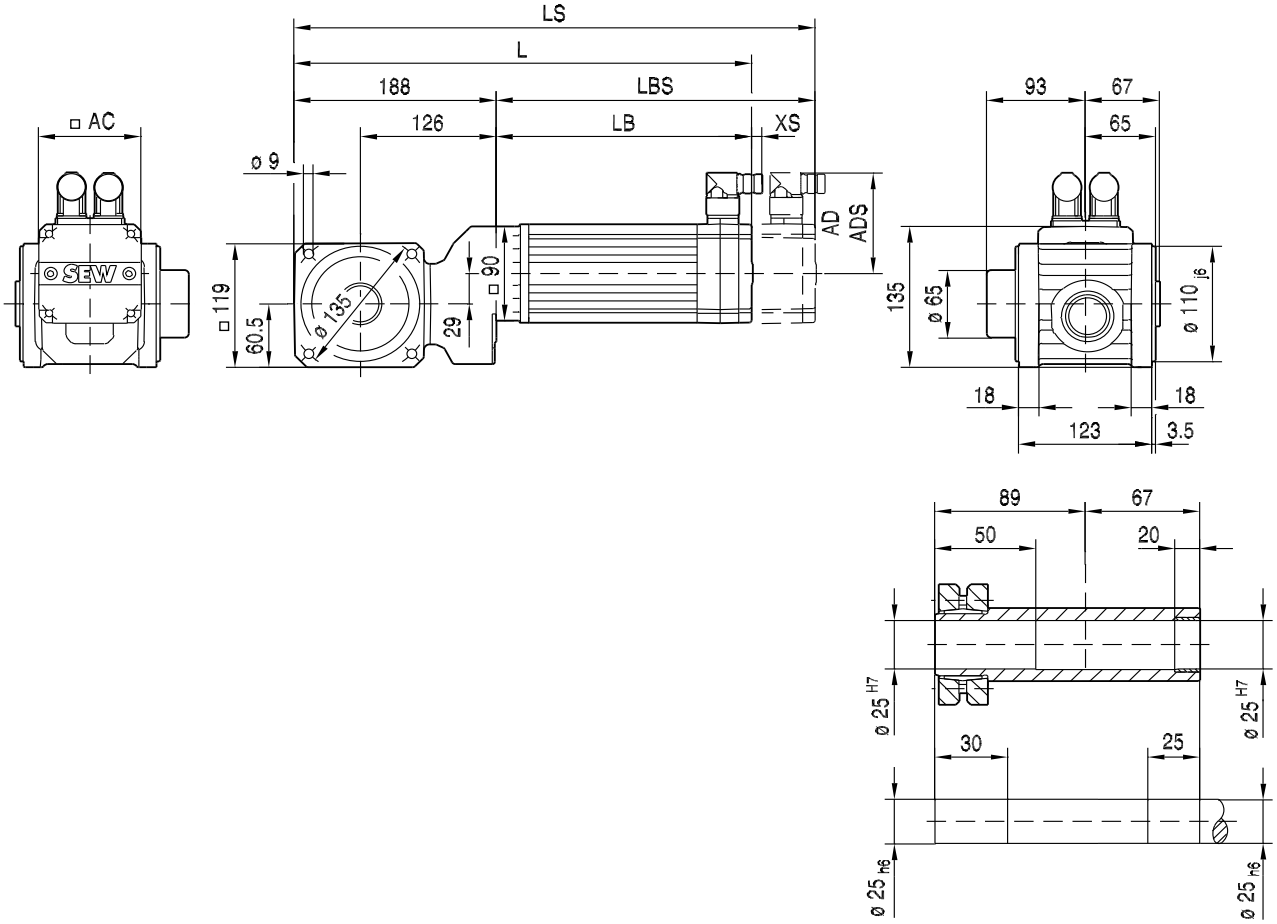

(→ 144)	CMP50S	CMP50M	CMP50L	CMP63S	CMP63M	CMP63L	CMP71S	CMP71M
AC	73	73	73	88	88	88	115	115
AD	86	86	86	92	92	92	102	102
ADS	86	86	86	92	92	92	104	104
L	334	373	412	369	419	469	360	385
LS	363	402	441	397	447	497	425	450
LB	146	185	224	181	231	281	173	198
LBS	175	214	253	210	260	310	238	263
XS	18	18	18	14	14	14	11	11

BSHF302/I..

55 009 00 06

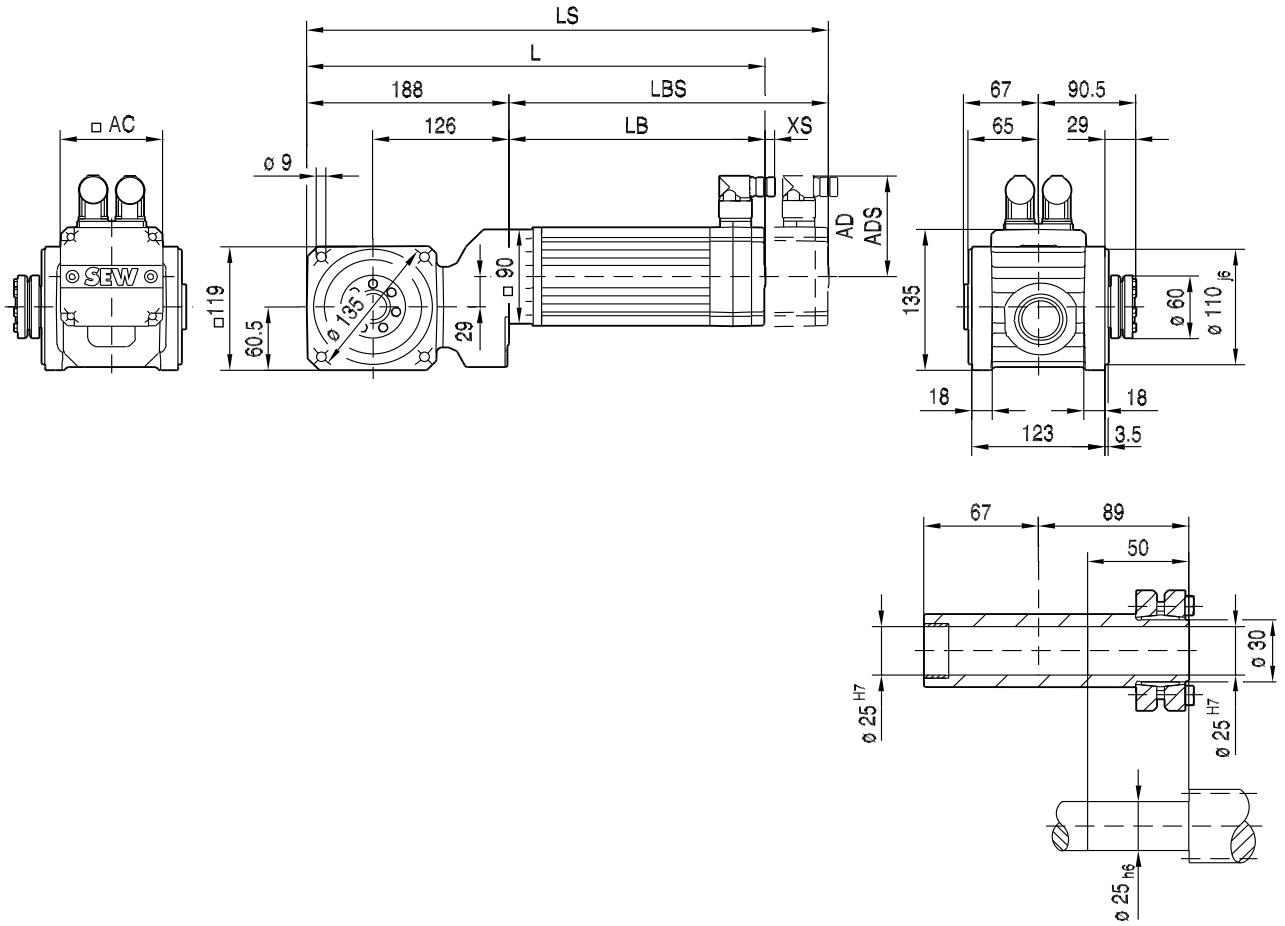

13

(→ 144)	CMP50S	CMP50M	CMP50L	CMP63S	CMP63M	CMP63L	CMP71S	CMP71M
AC	73	73	73	88	88	88	115	115
AD	86	86	86	92	92	92	102	102
ADS	86	86	86	92	92	92	104	104
L	334	373	412	369	419	469	360	385
LS	363	402	441	397	447	497	425	450
LB	146	185	224	181	231	281	173	198
LBS	175	214	253	210	260	310	238	263
XS	18	18	18	14	14	14	11	11

BSAF302..

55 016 00 07

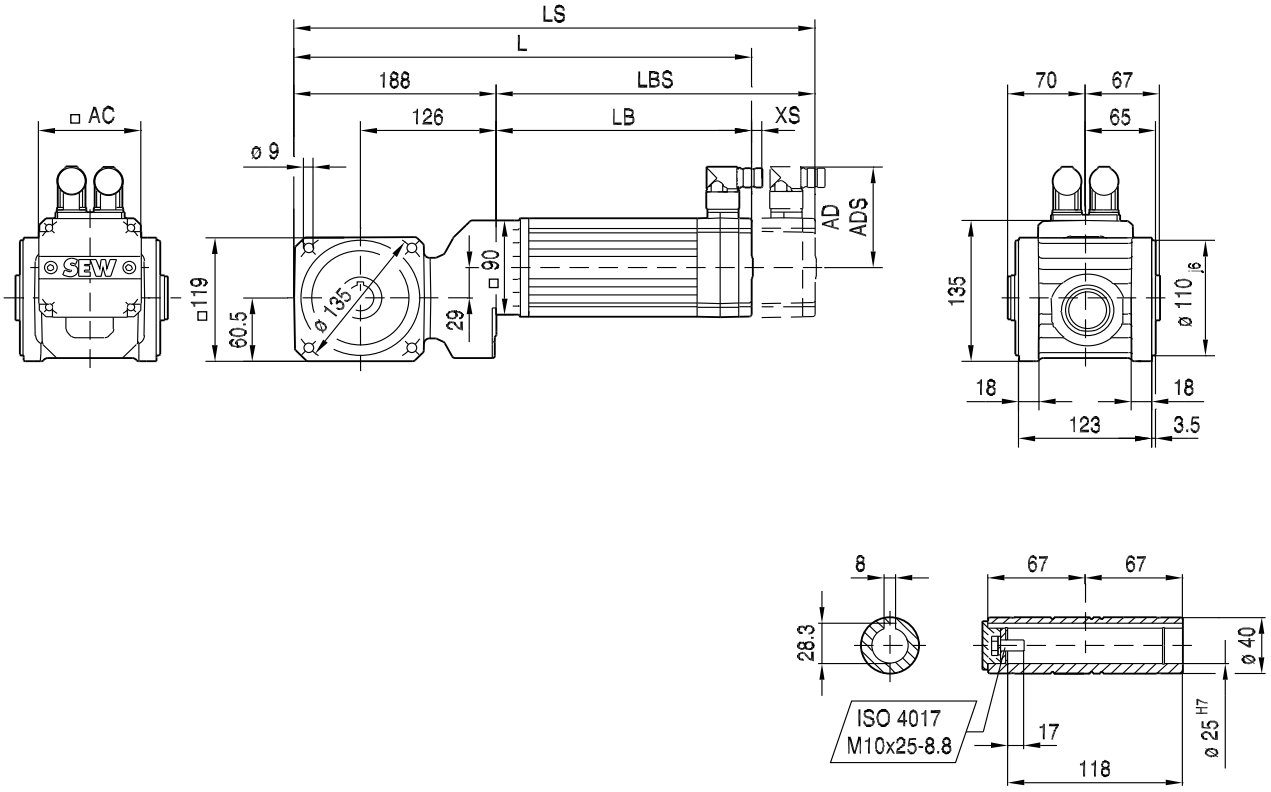

(→ 📖 144)	CMP50S	CMP50M	CMP50L	CMP63S	CMP63M	CMP63L	CMP71S	CMP71M
AC	73	73	73	88	88	88	115	115
AD	86	86	86	92	92	92	102	102
ADS	86	86	86	92	92	92	104	104
L	334	373	412	369	419	469	360	385
LS	363	402	441	397	447	497	425	450
LB	146	185	224	181	231	281	173	198
LBS	175	214	253	210	260	310	238	263
XS	18	18	18	14	14	14	11	11

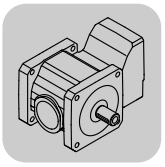

13.2.3 BS.F 402

M_{aDyn} [Nm]		CMP											
	i	50S	50M	50L	63S	63M	63L	71S	71M	71L	80S	80M	100S
BSF402 2	3.00						85		87	132	118	176	>183
	4.00		39	58	42	80	114	72	116	176	158	>200	>200
	6.00	29	58	87	63	121	171	108	174	>205	>205	>205	>205
	8.00	39	77	116	83	161	>210	144	>210				
	10.00		93	139	100	>186	>186	173	>186	>186	>186	>186	>186
	15.00	71	140	205	151	>210	>210	>210	>210	>210	>210	>210	>210
	20.00	94	187	>220	200	>220	>220	>220	>220				
	25.00	118	>225	>225	>225	>225		>225					
	30.00	142	>225		>225								

→ 📖 144

m [kg]		CMP											
	s	50S	50M	50L	63S	63M	63L	71S	71M	71L	80S	80M	100S
BSF402	2	13	14	15	15	17	18	19	21	23	26	28	33
BSBF: + 0.5 kg / BSHF: + -0.6 kg													

CMP..				M1			M2;M4			M3;M5-6			φ		
	i	n_{epk} [1/min]	η [%]	a_0	a_1	a_2	a_0	a_1	a_2	a_0	a_1	a_2		/R	/M
													[']	[']	[']
BSF402 2	3.00	4500	93.7	16.64	-0.042	136375	23.96	-0.064	131323	16.80	-0.043	134151	6	3	-
	4.00	4500	93.8	17.96	-0.052	135265	27.92	-0.082	129034	18.77	-0.053	132596	6	3	-
	6.00	4500	93.9	19.78	-0.066	133791	33.62	-0.110	126042	21.69	-0.070	130498	6	3	-
	8.00	4500	94	21.09	-0.077	132801	37.83	-0.131	124010	23.79	-0.082	129114	6	3	-
	10.00	4500	90.1	22.39	-0.211	82904	53.97	-0.374	74730	28.11	-0.227	79870	6	3	-
	15.00	4500	90.5	29.19	-0.282	80694	74.18	-0.523	70371	37.70	-0.308	77196	6	3	-
	20.00	4500	90.7	34.34	-0.335	79192	89.99	-0.638	67275	45.42	-0.370	75192	6	3	-
	25.00	4500	90.9	38.33	-0.375	78100	101.1	-0.725	65289	51.01	-0.417	73859	6	3	-
	30.00	4500	91	41.83	-0.407	77194	110.3	-0.794	63679	55.87	-0.455	72752	6	3	-

CMP..							c_T			F_{Ramax}			F_{Rapk}		
n_e = 1500	i	M_{amax} [Nm]	M_{apk} [Nm]	$M_{aNotaus}$ [Nm]	n_{ak} [1/min]	J_{GA} 10^{-4} [kgm^2]	BSF [Nm/']	BSBF [Nm/']	BSHF [Nm/']	BSF [N]	BSBF [N]	BSHF [N]	BSF [N]	BSBF [N]	BSHF [N]
BSF402 2	3.00	122	183	275	500	5.2	7.3	8.9	8.5	6600	7580	6510	9050	10800	10800
	4.00	136	200	300	375	3.2	7.7	9.6	9.0	7250	8330	7150	8970	10800	10800
	6.00	156	205	305	250	1.5	8.1	10	9.6	8300	9530	8190	8940	10800	10800
	8.00	160	210	315	188	0.92	8.3	11	9.9	9140	10600	9100	8920	10800	10800
	10.00	124	186	275	150	1.9	11	15	14	9270	10800	10500	9040	10800	10800
	15.00	140	210	315	100	1.0	11	16	14	9220	10800	10800	8920	10800	10800
	20.00	152	220	330	75	0.62	11	16	14	9170	10800	10800	8870	10800	10800
	25.00	160	225	335	64	0.45	11	16	14	9140	10800	10800	8840	10800	10800
	30.00	160	225	335	60	0.34	11	16	15	9140	10800	10800	8840	10800	10800

BSF402..

55 010 00 06

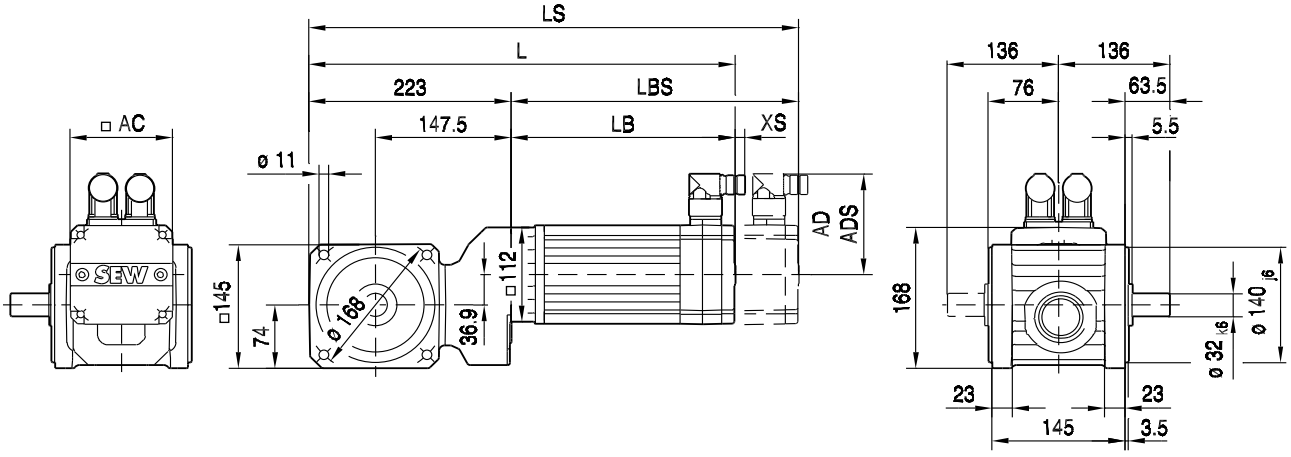

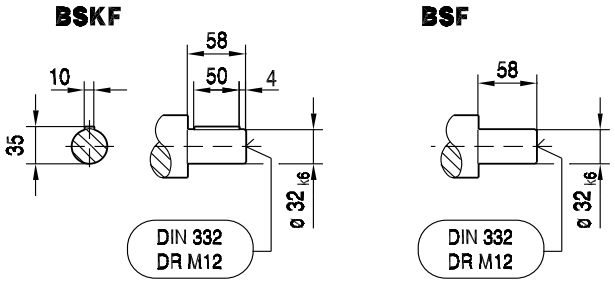

(→ 📖 144)	CMP50M	CMP50L	CMP63S	CMP63M	CMP63L	CMP71S	CMP71M	CMP71L	CMP80S	CMP80M	CMP100S
AC	73	73	88	88	88	115	115	115	137	137	162
AD	86	86	92	92	92	102	102	102	134	134	146
ADS	86	86	92	92	92	104	104	104	137	137	147
L	403	442	399	449	499	390	415	465	430	465	462
LS	432	471	428	478	527	455	480	530	507	542	559
LB	180	219	176	226	276	168	193	243	207	242	240
LBS	209	248	205	255	305	233	258	308	285	320	336
XS	18	18	14	14	14	11	11	11	37	37	37

BSBF402..

55 011 00 06

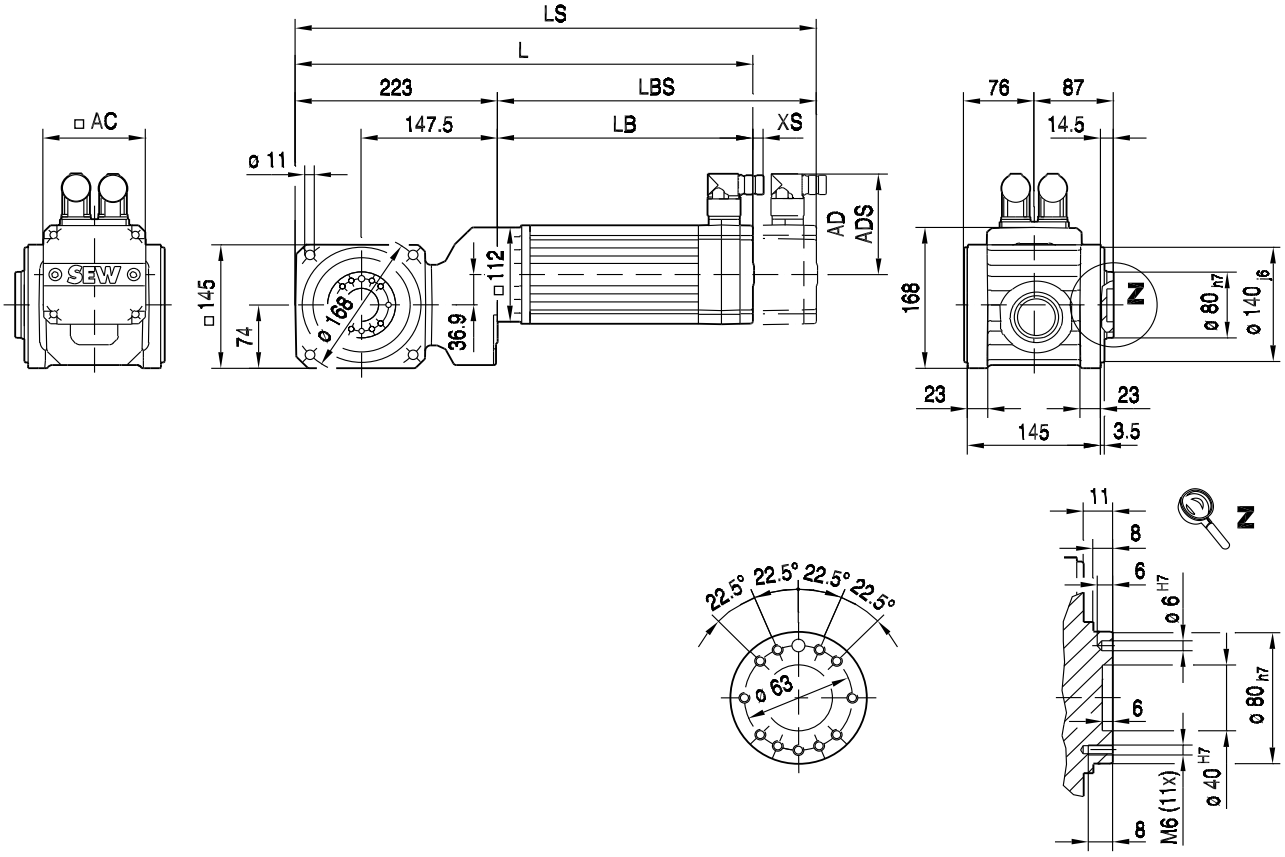

(→ 144)	CMP50M	CMP50L	CMP63S	CMP63M	CMP63L	CMP71S	CMP71M	CMP71L	CMP80S	CMP80M	CMP100S
AC	73	73	88	88	88	115	115	115	137	137	162
AD	86	86	92	92	92	102	102	102	134	134	146
ADS	86	86	92	92	92	104	104	104	137	137	147
L	403	442	399	449	499	390	415	465	430	465	462
LS	432	471	428	478	527	455	480	530	507	542	559
LB	180	219	176	226	276	168	193	243	207	242	240
LBS	209	248	205	255	305	233	258	308	285	320	336
XS	18	18	14	14	14	11	11	11	37	37	37

BSHF402..

55 012 00 06

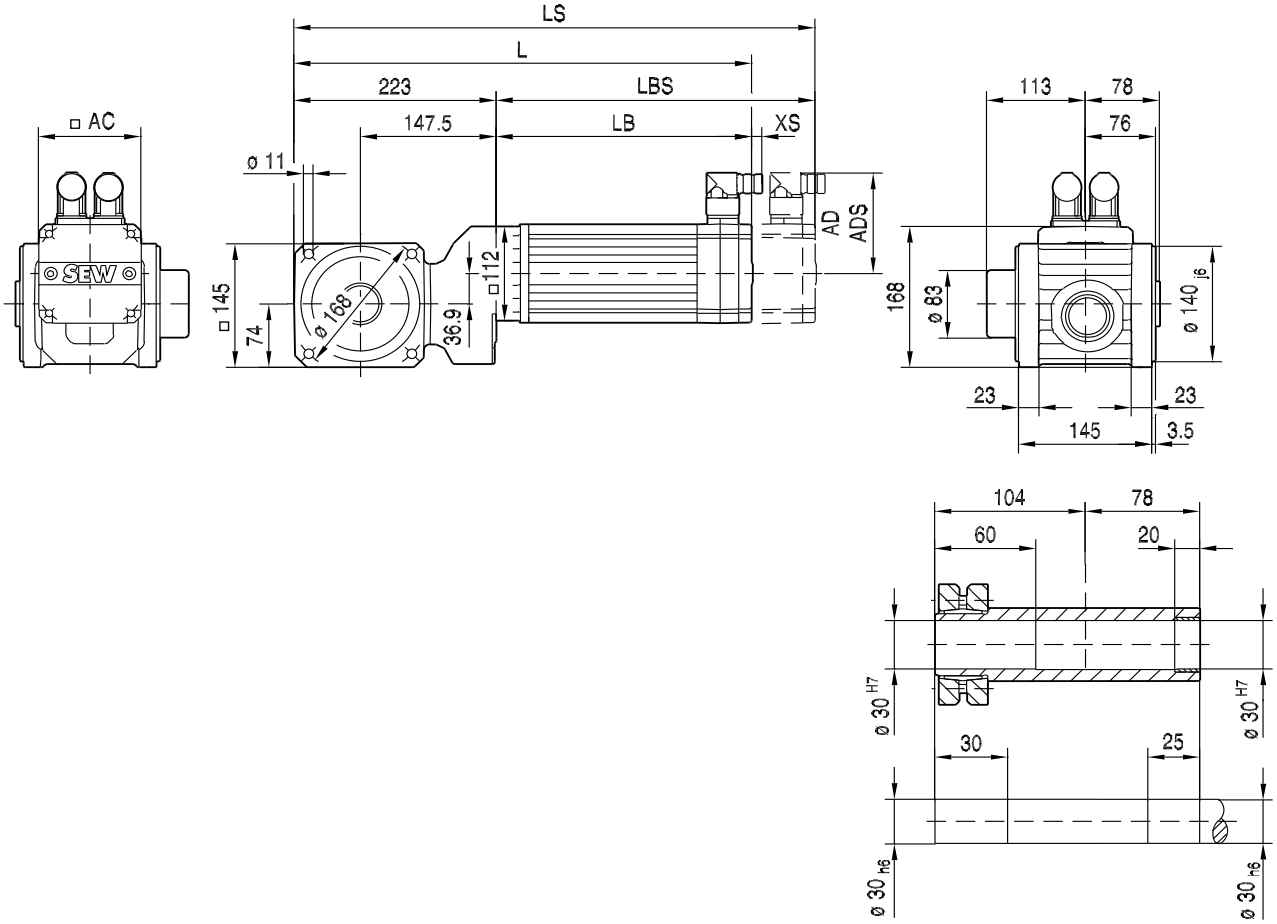

(→ 144)	CMP50M	CMP50L	CMP63S	CMP63M	CMP63L	CMP71S	CMP71M	CMP71L	CMP80S	CMP80M	CMP100S
AC	73	73	88	88	88	115	115	115	137	137	162
AD	86	86	92	92	92	102	102	102	134	134	146
ADS	86	86	92	92	92	104	104	104	137	137	147
L	403	442	399	449	499	390	415	465	430	465	462
LS	432	471	428	478	527	455	480	530	507	542	559
LB	180	219	176	226	276	168	193	243	207	242	240
LBS	209	248	205	255	305	233	258	308	285	320	336
XS	18	18	14	14	14	11	11	11	37	37	37

BSHF402/I..

55 013 00 06

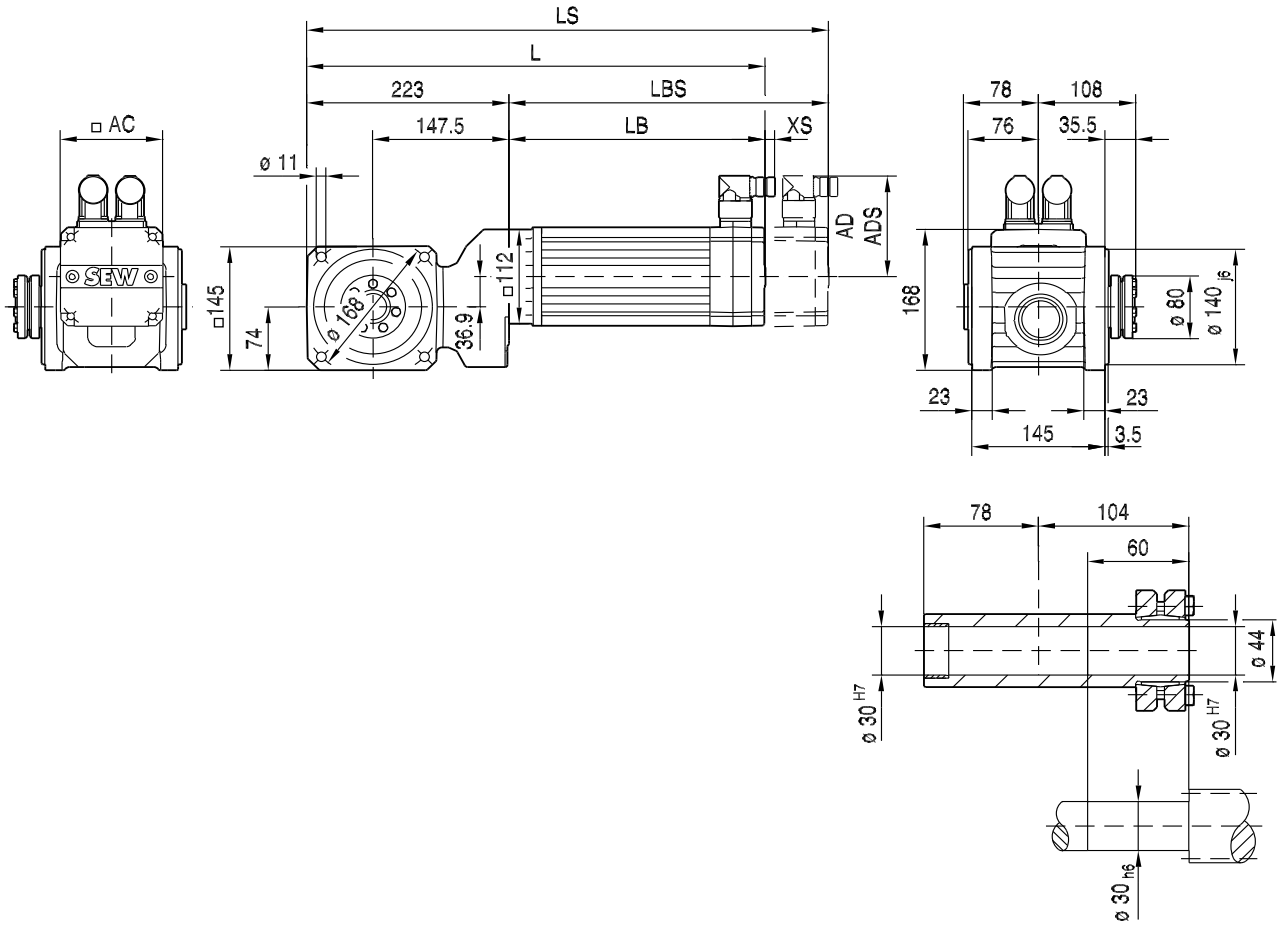

(→ 144)	CMP50M	CMP50L	CMP63S	CMP63M	CMP63L	CMP71S	CMP71M	CMP71L	CMP80S	CMP80M	CMP100S
AC	73	73	88	88	88	115	115	115	137	137	162
AD	86	86	92	92	92	102	102	102	134	134	146
ADS	86	86	92	92	92	104	104	104	137	137	147
L	403	442	399	449	499	390	415	465	430	465	462
LS	432	471	428	478	527	455	480	530	507	542	559
LB	180	219	176	226	276	168	193	243	207	242	240
LBS	209	248	205	255	305	233	258	308	285	320	336
XS	18	18	14	14	14	11	11	11	37	37	37

BSAF402..

55 017 00 07

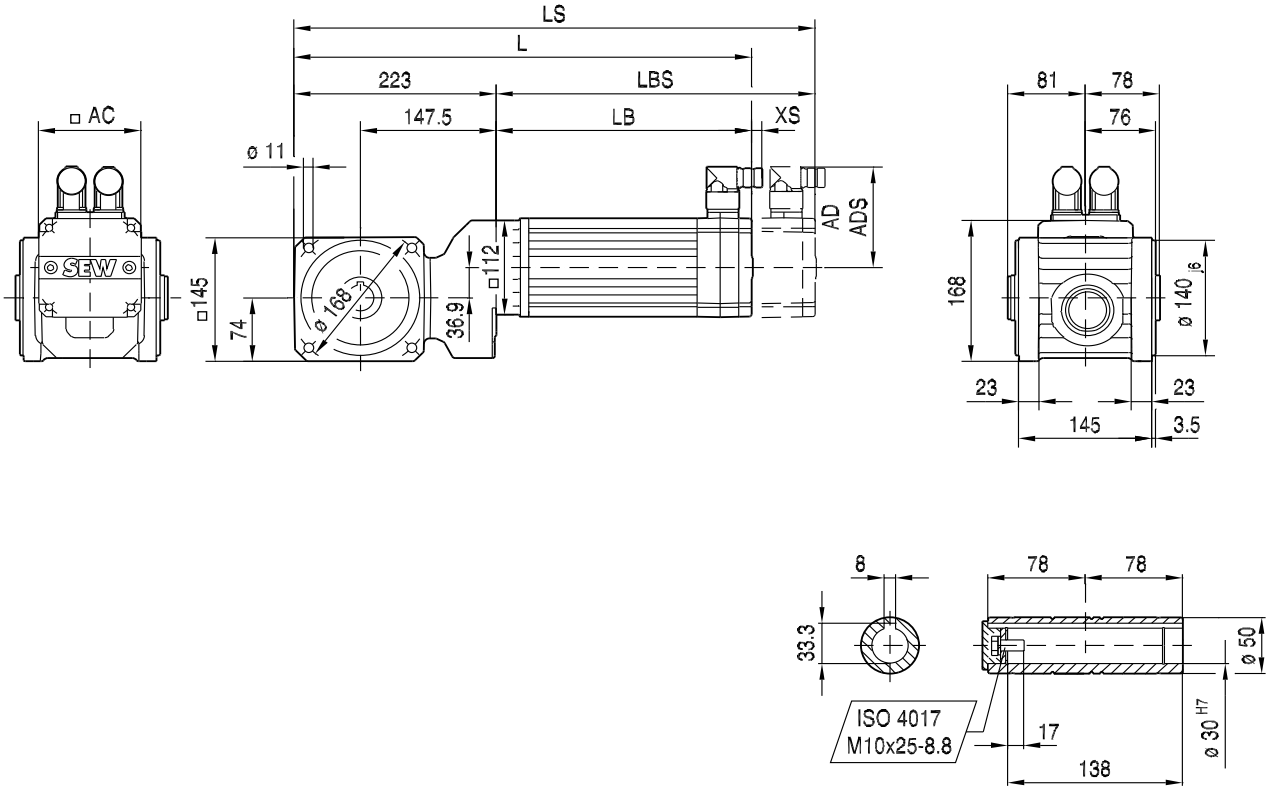

(→ 📖 144)	CMP50M	CMP50L	CMP63S	CMP63M	CMP63L	CMP71S	CMP71M	CMP71L	CMP80S	CMP80M	CMP100S
AC	73	73	88	88	88	115	115	115	137	137	162
AD	86	86	92	92	92	102	102	102	134	134	146
ADS	86	86	92	92	92	104	104	104	137	137	147
L	403	442	399	449	499	390	415	465	430	465	462
LS	432	471	428	478	527	455	480	530	507	542	559
LB	180	219	176	226	276	168	193	243	207	242	240
LBS	209	248	205	255	305	233	258	308	285	320	336
XS	18	18	14	14	14	11	11	11	37	37	37

13.2.4 BS.F 502

M_{aDyn} [Nm]		CMP								
	i	63S	63M	63L	71S	71M	71L	80S	80M	100S
BSF502 2	3.00								177	193
	4.00		81	114	72	116	177	158	235	255
	6.00	63	121	172	108	174	260	235	350	385
	8.00	84	161	225	145	230	350	315		
	10.00		194	275	174	275	>375	>375	>375	>375
	12.00	125	240		215					
	15.00	151	290	>375	260	>375	>375	>375	>375	>375
	20.00	200	>375	>375	345	>375	>375	>375		
	25.00	250	>375	>375	>375	>375				
	30.00	300	>375		>375					
	35.00	350								

→ 📖 144

m [kg]		CMP								
	s	63S	63M	63L	71S	71M	71L	80S	80M	100S
BSF502	2	33	34	36	37	38	41	43	45	50
BSBF: + 0.4 kg / BSHF: + -1.0 kg										

CMP..				M1			M2;M4			M3;M5-6			φ		
	i	n_{epk} [1/min]	η [%]	a_0	a_1	a_2	a_0	a_1	a_2	a_0	a_1	a_2	[']	/R [']	/M [']
BSF502 2	3.00	4500	94.1	21.29	-0.055	184165	18.47	-0.081	183632	32.71	-0.077	180058	6	3	-
	4.00	4500	94.1	20.57	-0.065	183623	16.99	-0.097	182939	34.95	-0.094	178708	6	3	-
	6.00	4500	94.1	19.77	-0.080	182775	14.92	-0.121	181967	37.60	-0.120	177200	6	3	-
	8.00	4500	94.1	19.26	-0.090	182213	13.39	-0.137	181401	39.07	-0.138	176411	6	3	-
	10.00	4500	90.5	-6.62	-0.203	120320	-17.47	-0.316	119454	22.51	-0.334	115909	6	3	-
	12.00	4500	94.1	18.42	-0.103	181624	11.52	-0.158	180702	40.77	-0.162	175563	6	3	-
	15.00	4500	90.5	-8.98	-0.257	119313	-22.97	-0.403	118384	27.69	-0.441	114160	6	3	-
	20.00	4500	90.5	-10.77	-0.295	118759	-26.04	-0.466	117558	31.72	-0.518	112896	6	3	-
	25.00	4500	90.5	-11.48	-0.324	118189	-28.42	-0.511	117063	34.29	-0.575	112134	6	3	-
	30.00	4500	90.6	-12.28	-0.345	117868	-30.16	-0.546	116700	36.58	-0.620	111510	6	3	-
	35.00	4500	90.6	-12.89	-0.362	117623	-31.46	-0.574	116419	38.29	-0.655	111052	6	3	-

CMP..							c_T			F_{Ramax}			F_{Rapk}		
n_e = 1500	i	M_{amax} [Nm]	M_{apk} [Nm]	$M_{aNotaus}$ [Nm]	n_{ak} [1/min]	J_{GA} 10^{-4} [kgm^2]	BSF [Nm/']	BSBF [Nm/']	BSHF [Nm/']	BSF [N]	BSBF [N]	BSHF [N]	BSF [N]	BSBF [N]	BSHF [N]
BSF502 2	3.00	310	385	575	533	12	23	27	25	10100	12100	10900	12000	14400	14400
	4.00	320	400	600	450	7.3	25	31	27	11100	13400	12000	11900	14400	14400
	6.00	320	410	615	450	3.6	27	33	30	12200	14400	13800	11900	14400	14400
	8.00	320	420	630	450	6.2	28	35	31	12200	14400	14400	11800	14400	14400
	10.00	250	375	560	500	4.0	31	35	33	12300	14400	14400	12000	14400	14400
	12.00	320	410	615	417	1.1	28	36	31	12200	14400	14400	11900	14400	14400
	15.00	250	375	560	467	2.1	32	36	34	12300	14400	14400	12000	14400	14400
	20.00	250	375	560	350	1.3	32	37	35	12300	14400	14400	12000	14400	14400
	25.00	250	375	560	280	0.92	33	37	35	12300	14400	14400	12000	14400	14400
	30.00	250	375	560	233	0.70	33	37	35	12300	14400	14400	12000	14400	14400
	35.00	250	375	560	200	0.56	32	37	35	12300	14400	14400	12000	14400	14400

BSF502..

55 014 00 06

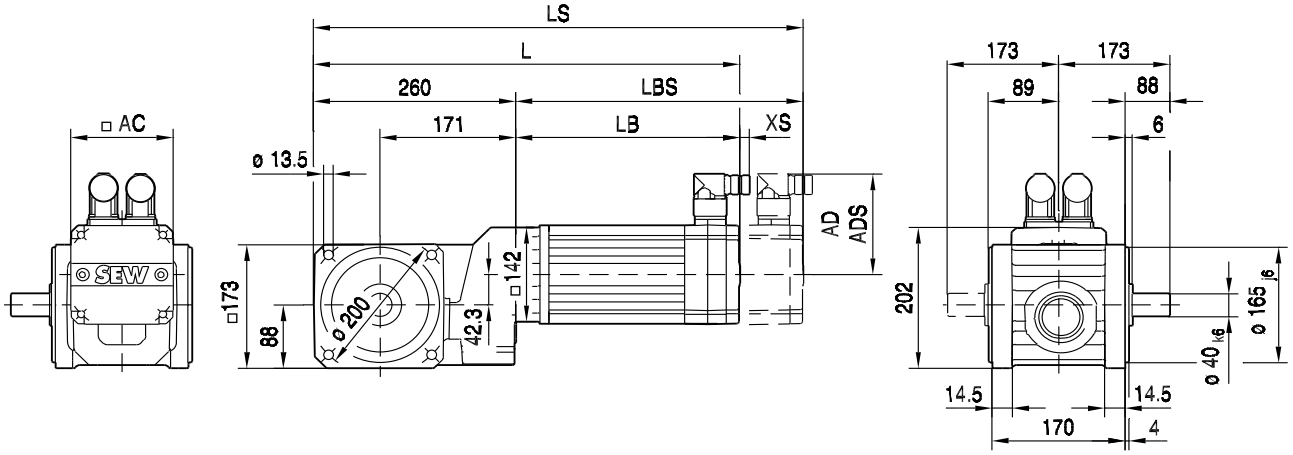

BSKF

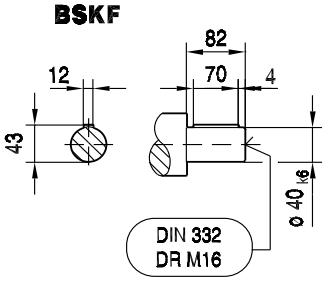

BSF

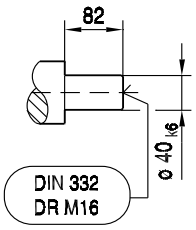

(→ 📖 144)	CMP63S	CMP63M	CMP63L	CMP71S	CMP71M	CMP71L	CMP80S	CMP80M	CMP100S
AC	88	88	88	115	115	115	137	137	162
AD	92	92	92	102	102	102	134	134	146
ADS	92	92	92	104	104	104	137	137	147
L	429	478	528	420	445	495	459	493	491
LS	457	507	557	485	510	560	537	571	587
LB	169	218	268	160	185	235	199	233	231
LBS	197	247	297	225	250	300	277	311	327
XS	14	14	14	11	11	11	37	37	37

BSBF502..

55 015 00 06

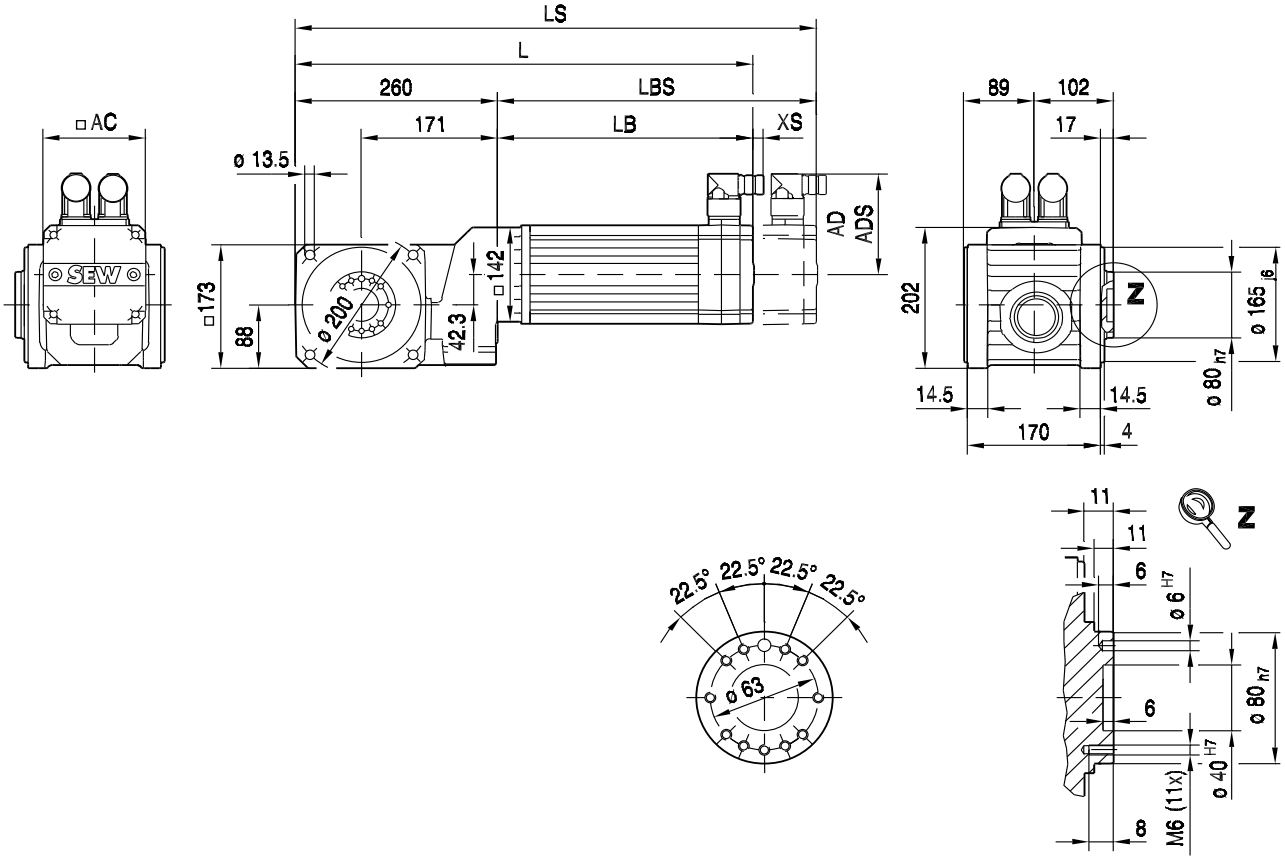

(→ 144)	CMP63S	CMP63M	CMP63L	CMP71S	CMP71M	CMP71L	CMP80S	CMP80M	CMP100S
AC	88	88	88	115	115	115	137	137	162
AD	92	92	92	102	102	102	134	134	146
ADS	92	92	92	104	104	104	137	137	147
L	429	478	528	420	445	495	459	493	491
LS	457	507	557	485	510	560	537	571	587
LB	169	218	268	160	185	235	199	233	231
LBS	197	247	297	225	250	300	277	311	327
XS	14	14	14	11	11	11	37	37	37

BSHF502..

55 016 00 06

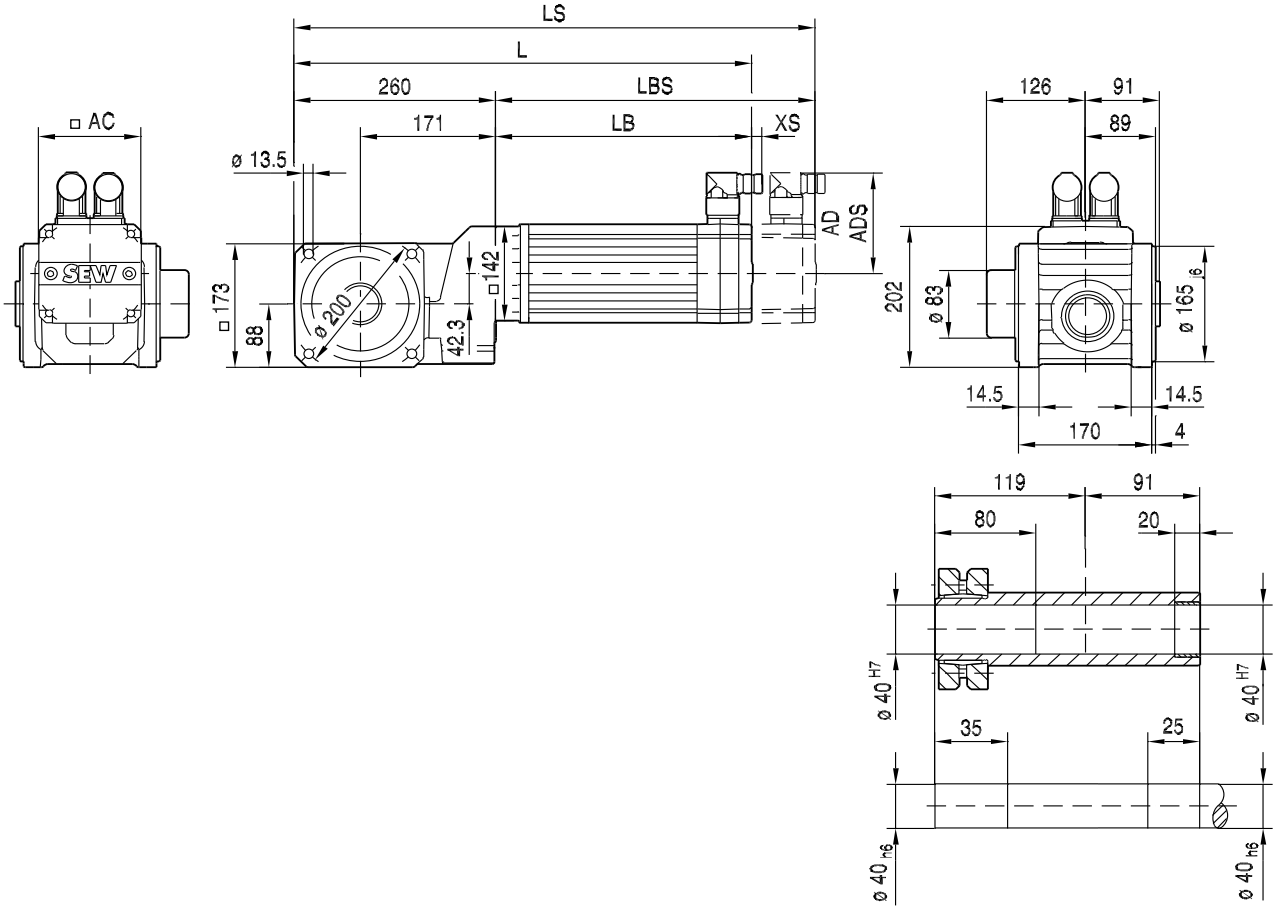

(→ 144)	CMP63S	CMP63M	CMP63L	CMP71S	CMP71M	CMP71L	CMP80S	CMP80M	CMP100S
AC	88	88	88	115	115	115	137	137	162
AD	92	92	92	102	102	102	134	134	146
ADS	92	92	92	104	104	104	137	137	147
L	429	478	528	420	445	495	459	493	491
LS	457	507	557	485	510	560	537	571	587
LB	169	218	268	160	185	235	199	233	231
LBS	197	247	297	225	250	300	277	311	327
XS	14	14	14	11	11	11	37	37	37

BSHF502/I..

55 017 00 06

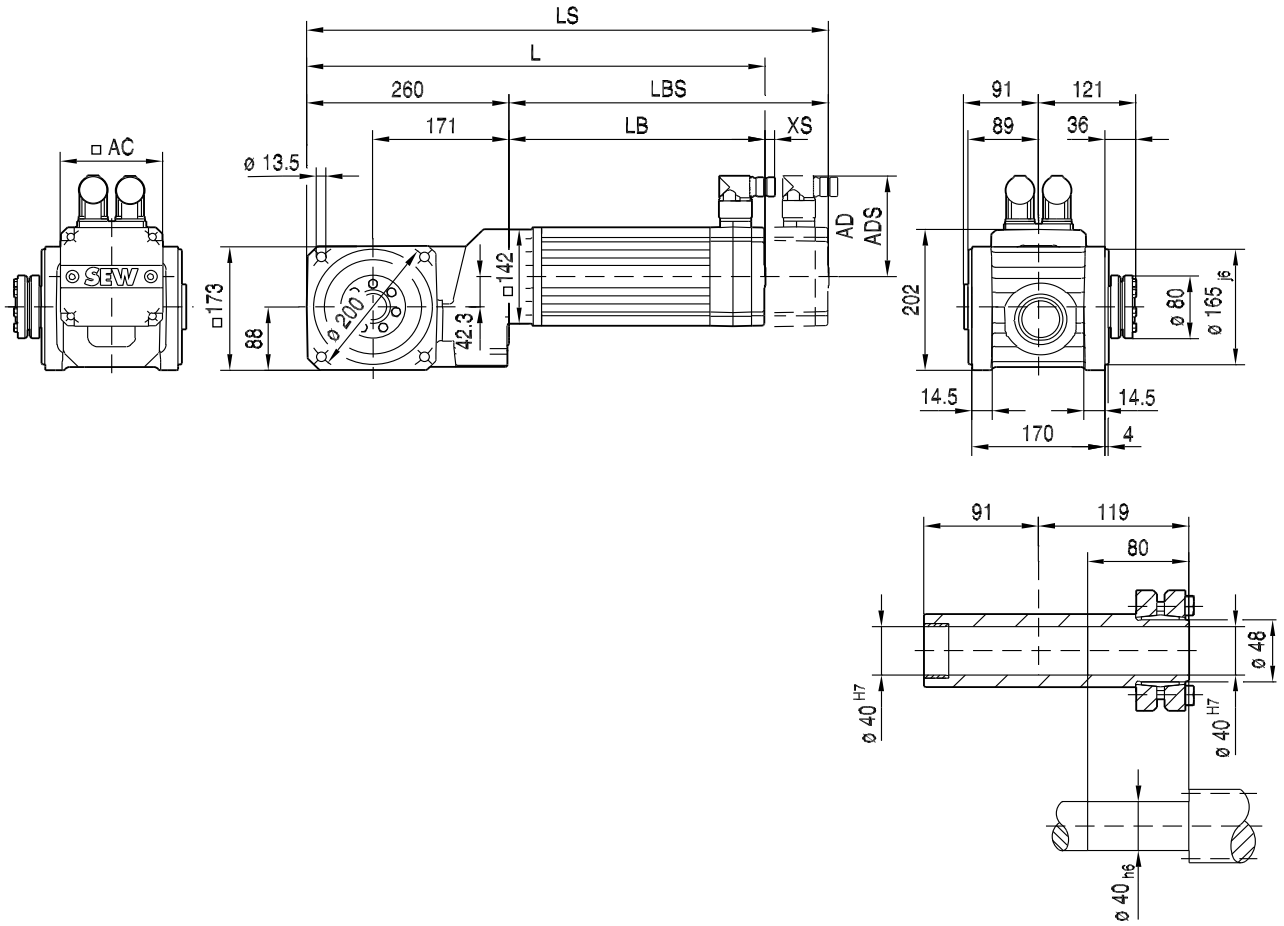

13

(→ 144)	CMP63S	CMP63M	CMP63L	CMP71S	CMP71M	CMP71L	CMP80S	CMP80M	CMP100S
AC	88	88	88	115	115	115	137	137	162
AD	92	92	92	102	102	102	134	134	146
ADS	92	92	92	104	104	104	137	137	147
L	429	478	528	420	445	495	459	493	491
LS	457	507	557	485	510	560	537	571	587
LB	169	218	268	160	185	235	199	233	231
LBS	197	247	297	225	250	300	277	311	327
XS	14	14	14	11	11	11	37	37	37

BSAF502..

55 018 00 07

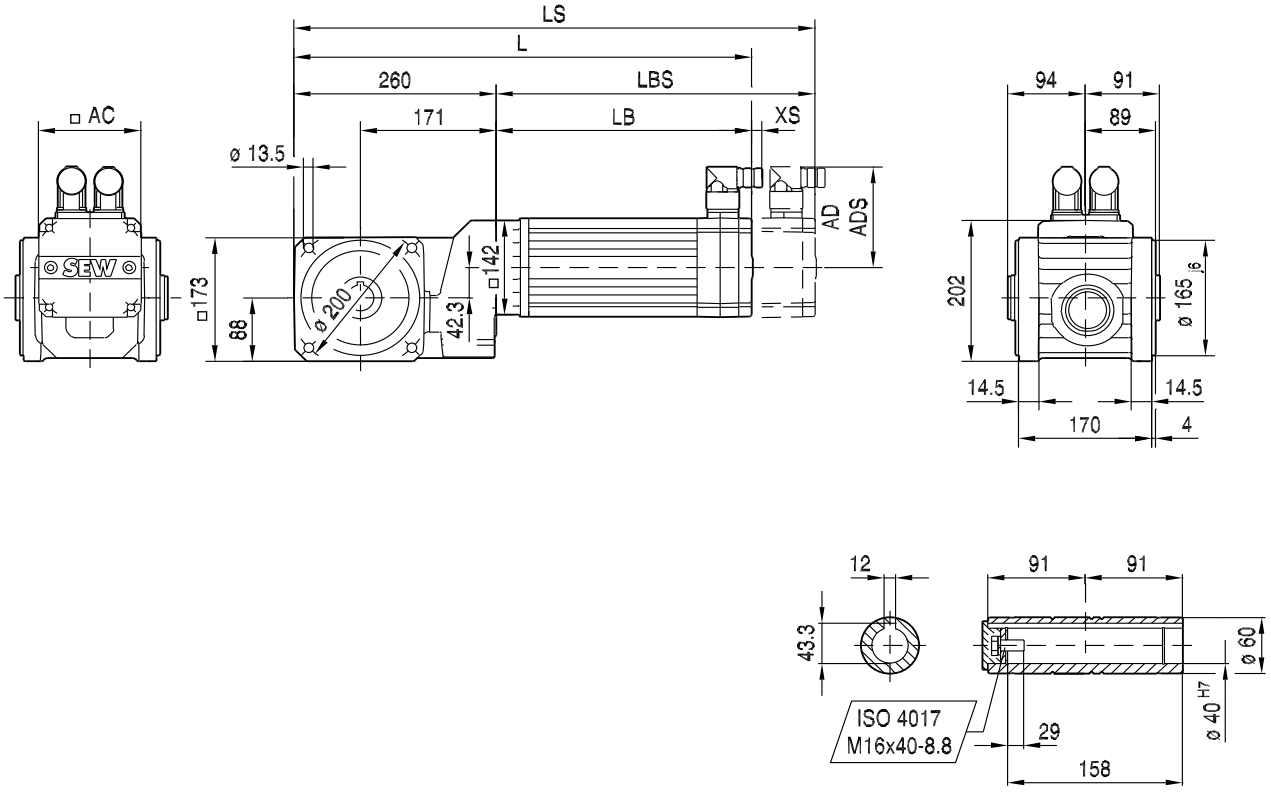

(→ 📖 144)	CMP63S	CMP63M	CMP63L	CMP71S	CMP71M	CMP71L	CMP80S	CMP80M	CMP100S
AC	88	88	88	115	115	115	137	137	162
AD	92	92	92	102	102	102	134	134	146
ADS	92	92	92	104	104	104	137	137	147
L	429	478	528	420	445	495	459	493	491
LS	457	507	557	485	510	560	537	571	587
LB	169	218	268	160	185	235	199	233	231
LBS	197	247	297	225	250	300	277	311	327
XS	14	14	14	11	11	11	37	37	37

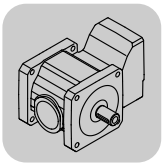

13.2.5 BS.F 602

M_{aDyn} [Nm]		CMP										
	i	63M	63L	71S	71M	71L	80S	80M	80L	100S	100M	100L
BSF602 2	3.00								300		300	500
	4.00		114		116	177	158	235	400	255	405	670
	6.00	121	172	108	174	260	235	350	600	385	605	>800
	8.00	161	225	145	230	350	315	470		510		
	10.00		275		275	425	380	565	>750	620	>750	>750
	12.00	240	340	215	345							
	15.00	290	410	260	415	635	570	>750	>750	>750	>750	>750
	20.00	385	550	345	555	>750	>750	>750		>750		
	25.00	485	690	435	695	>750	>750					
	30.00	580	>750	520	>750							
	35.00	680		610								
	40.00	>750		695								

→ 📖 144

m [kg]		CMP										
	s	63M	63L	71S	71M	71L	80S	80M	80L	100S	100M	100L
BSF602	2	51	53	54	55	58	60	62	66	67	71	80
BSBF: + 0.3 kg / BSHF: + -2.9 kg												

CMP..				M1			M2;M4			M3;M5-6			φ		
	i	n_{epk} [1/min]	η [%]	a_0	a_1	a_2	a_0	a_1	a_2	a_0	a_1	a_2	[']	/R [']	/M [']
BSF602 2	3.00	4500	94	-1.22	-0.060	258182	17.38	-0.144	253939	36.73	-0.132	247267	6	3	-
	4.00	4500	94.1	-3.35	-0.071	257389	17.94	-0.178	252543	42.42	-0.166	244809	6	3	-
	6.00	4500	94.1	-6.35	-0.086	256315	18.50	-0.230	250689	50.09	-0.218	241723	6	3	-
	8.00	4500	94.1	-8.40	-0.097	255637	18.73	-0.267	249529	54.77	-0.255	239958	6	3	-
	10.00	4500	90.9	-47.50	-0.236	167324	-14.52	-0.678	162357	41.59	-0.662	155420	6	3	-
	12.00	4500	94.2	-11.01	-0.111	254840	18.58	-0.314	248244	60.30	-0.303	237995	6	3	-
	15.00	4500	90.8	-55.05	-0.294	166158	-15.40	-0.892	160319	47.82	-0.869	154910	6	3	-
	20.00	4500	90.8	-60.08	-0.333	165439	-17.90	-1.036	159395	52.82	-1.018	154092	6	3	-
	25.00	4500	90.9	-63.71	-0.362	164961	-18.71	-1.146	158560	57.42	-1.130	153134	6	3	-
	30.00	4500	90.9	-66.47	-0.383	164630	-19.57	-1.230	158019	60.84	-1.217	152406	6	3	-
	35.00	4500	90.9	-68.08	-0.402	164287	-20.31	-1.295	157620	64.77	-1.290	151662	6	3	-
	40.00	4500	90.9	-69.66	-0.415	164073	-20.99	-1.347	157322	67.10	-1.346	151214	6	3	-

CMP..							c_T			F_{Ramax}			F_{Rapk}		
n_e = 1500	i	M_{amax} [Nm]	M_{apk} [Nm]	$M_{aNotaus}$ [Nm]	n_{ak} [1/min]	J_{GA} 10^{-4} [kgm^2]	BSF [Nm/']	BSBF [Nm/']	BSHF [Nm/']	BSF [N]	BSBF [N]	BSHF [N]	BSF [N]	BSBF [N]	BSHF [N]
BSF602 2	3.00	505	700	1050	500	35	45	49	49	15200	17400	15700	24000	24000	24000
	4.00	575	715	1070	375	21	47	52	52	16500	18900	17000	24000	24000	24000
	6.00	610	800	1200	250	10	50	56	55	18800	21500	19400	24000	24000	24000
	8.00	640	780	1170	213	6.2	52	58	58	20600	23600	21300	24000	24000	24000
	10.00	520	750	1120	200	9.9	76	90	87	22400	24000	23100	24000	24000	24000
	12.00	640	775	1160	258	2.9	54	60	60	23700	24000	24000	24000	24000	24000
	15.00	520	750	1120	187	5.3	77	92	89	24000	24000	24000	24000	24000	24000
	20.00	520	750	1120	190	3.5	74	88	85	24000	24000	24000	24000	24000	24000
	25.00	520	750	1120	192	2.5	76	90	86	24000	24000	24000	24000	24000	24000
	30.00	520	750	1120	193	1.7	74	88	85	24000	24000	24000	24000	24000	24000
	35.00	520	750	1120	200	1.4	73	87	83	24000	24000	24000	24000	24000	24000
	40.00	520	750	1120	175	1.1	74	87	84	24000	24000	24000	24000	24000	24000

BSF602..

55 018 00 06

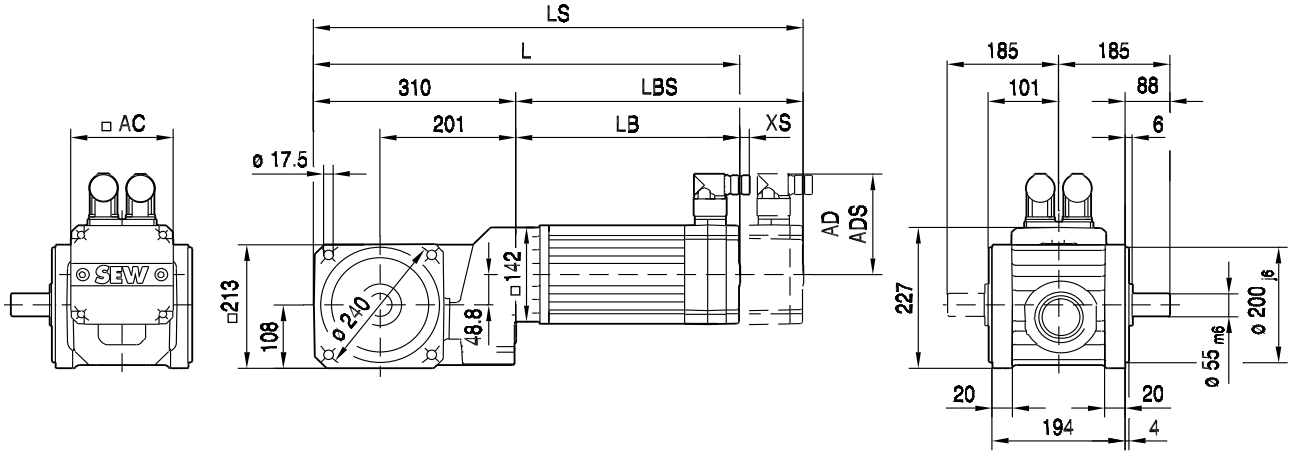

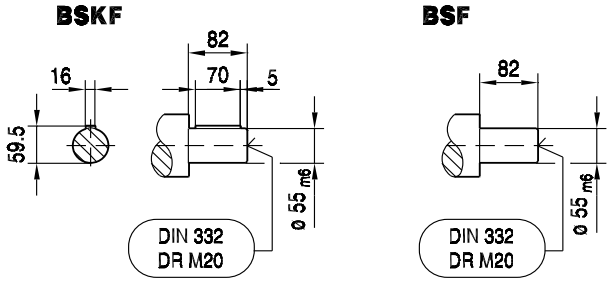

(→ 144)	CMP63M	CMP63L	CMP71S	CMP71M	CMP71L	CMP80S	CMP80M	CMP80L	CMP100S	CMP100M	CMP100L
AC	88	88	115	115	115	137	137	137	162	162	162
AD	92	92	102	102	102	134	134	134	146	146	146
ADS	92	92	104	104	104	137	137	137	147	147	147
L	528	578	470	495	545	509	543	606	541	576	656
LS	557	607	535	560	610	587	621	684	637	672	752
LB	218	268	160	185	235	199	233	296	231	266	346
LBS	247	297	225	250	300	277	311	374	327	362	442
XS	14	14	11	11	11	37	37	37	37	37	37

BSBF602..

55 019 00 06

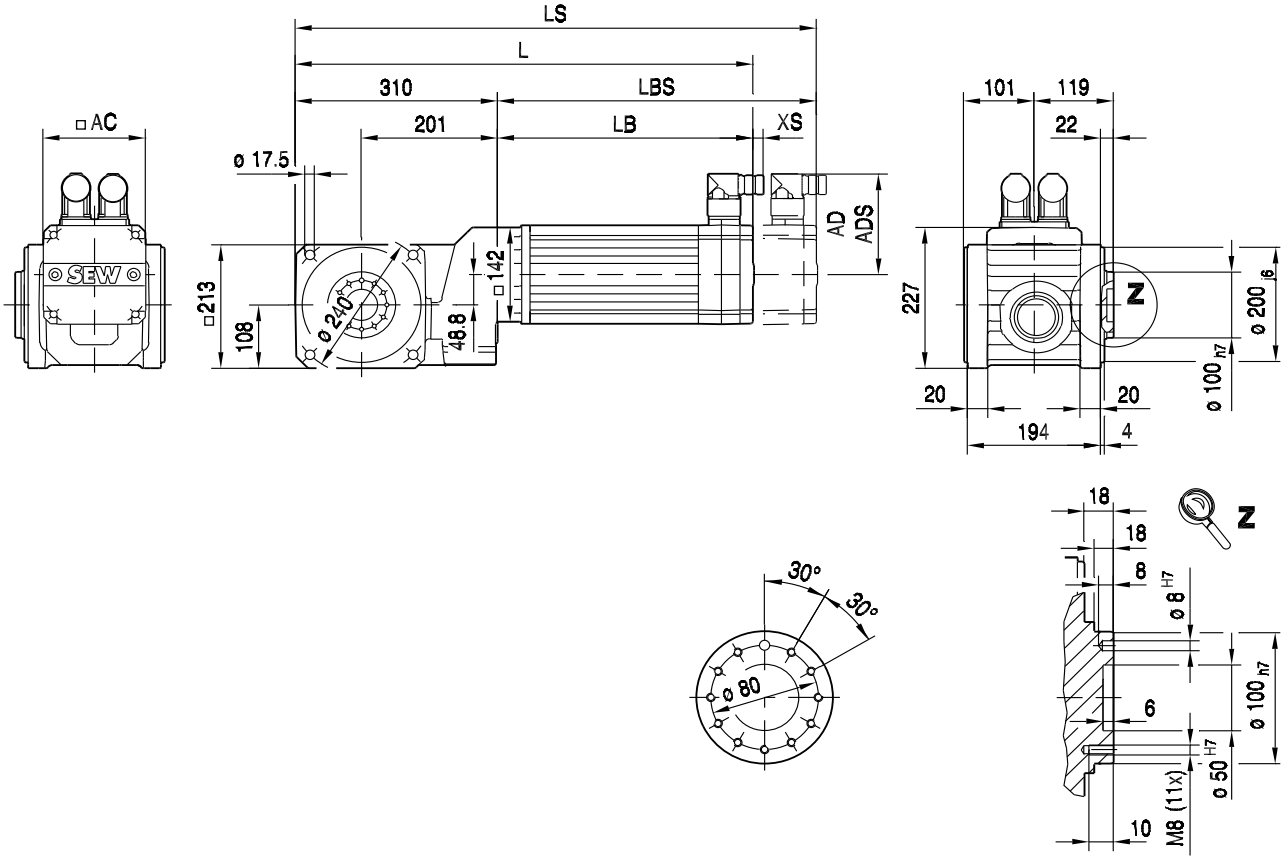

(→ 144)	CMP63M	CMP63L	CMP71S	CMP71M	CMP71L	CMP80S	CMP80M	CMP80L	CMP100S	CMP100M	CMP100L
AC	88	88	115	115	115	137	137	137	162	162	162
AD	92	92	102	102	102	134	134	134	146	146	146
ADS	92	92	104	104	104	137	137	137	147	147	147
L	528	578	470	495	545	509	543	606	541	576	656
LS	557	607	535	560	610	587	621	684	637	672	752
LB	218	268	160	185	235	199	233	296	231	266	346
LBS	247	297	225	250	300	277	311	374	327	362	442
XS	14	14	11	11	11	37	37	37	37	37	37

BSHF602..

55 020 00 06

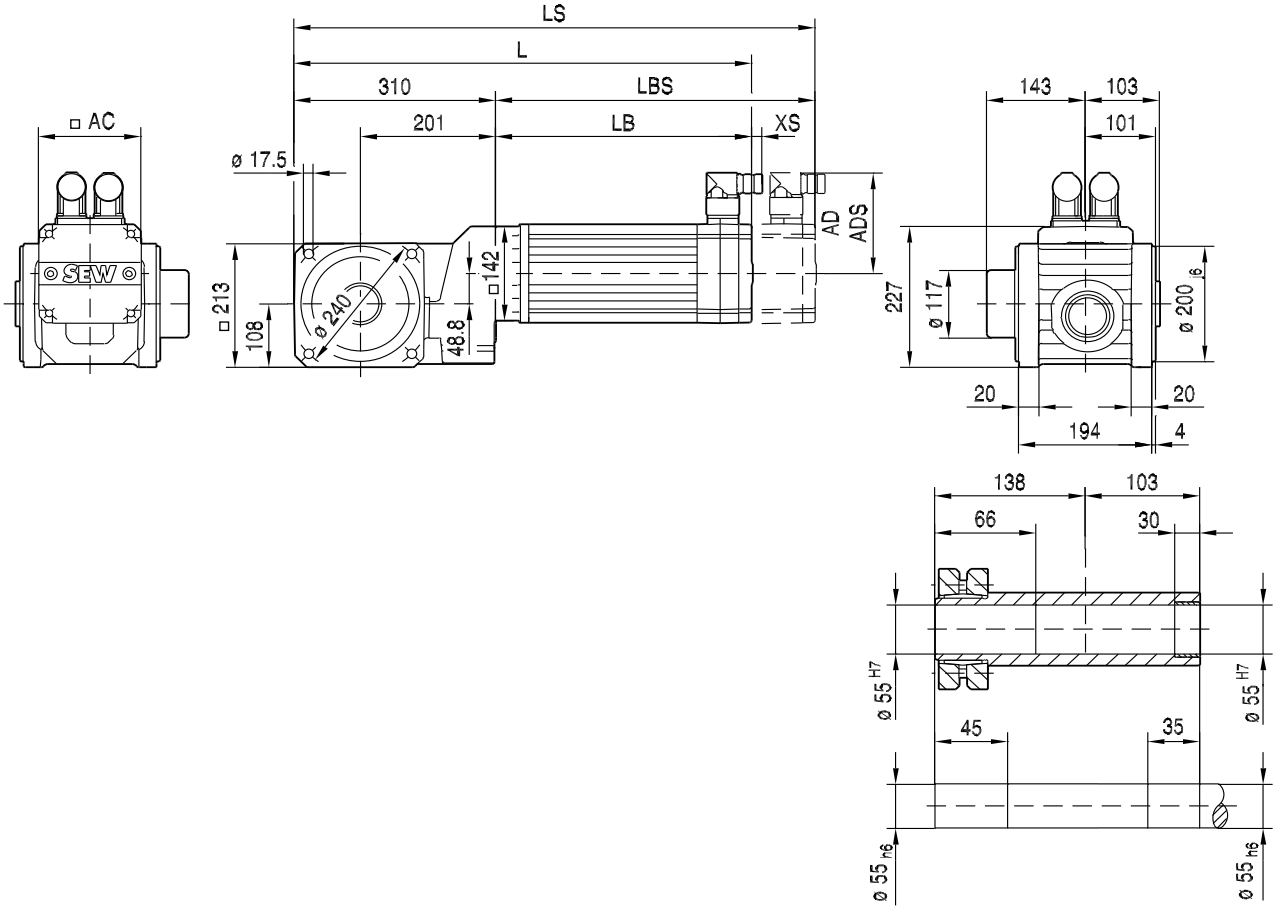

(→ 📖 144)	CMP63M	CMP63L	CMP71S	CMP71M	CMP71L	CMP80S	CMP80M	CMP80L	CMP100S	CMP100M	CMP100L
AC	88	88	115	115	115	137	137	137	162	162	162
AD	92	92	102	102	102	134	134	134	146	146	146
ADS	92	92	104	104	104	137	137	137	147	147	147
L	528	578	470	495	545	509	543	606	541	576	656
LS	557	607	535	560	610	587	621	684	637	672	752
LB	218	268	160	185	235	199	233	296	231	266	346
LBS	247	297	225	250	300	277	311	374	327	362	442
XS	14	14	11	11	11	37	37	37	37	37	37

BSHF602/I..

55 021 00 06

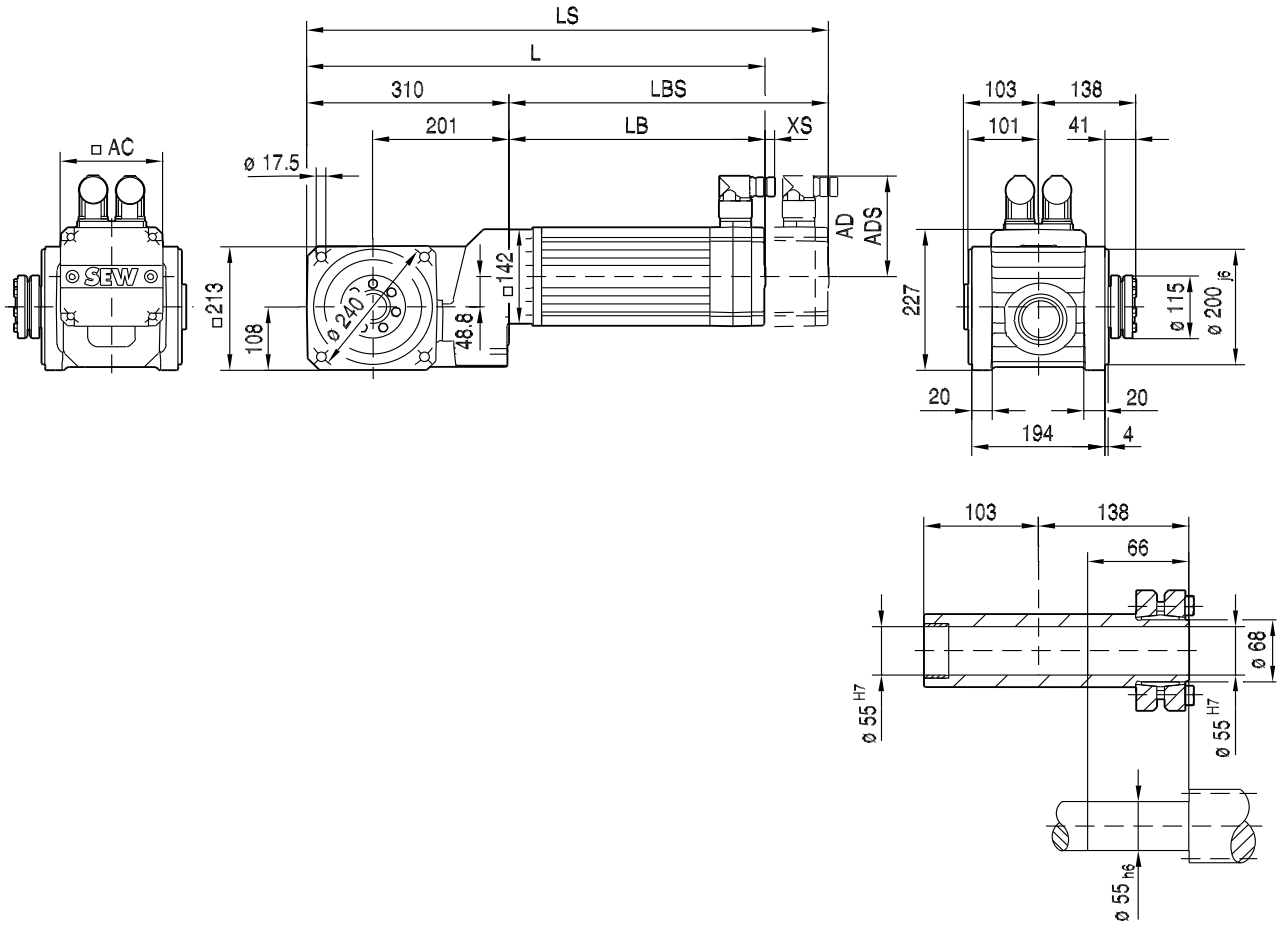

(→ 144)	CMP63M	CMP63L	CMP71S	CMP71M	CMP71L	CMP80S	CMP80M	CMP80L	CMP100S	CMP100M	CMP100L
AC	88	88	115	115	115	137	137	137	162	162	162
AD	92	92	102	102	102	134	134	134	146	146	146
ADS	92	92	104	104	104	137	137	137	147	147	147
L	528	578	470	495	545	509	543	606	541	576	656
LS	557	607	535	560	610	587	621	684	637	672	752
LB	218	268	160	185	235	199	233	296	231	266	346
LBS	247	297	225	250	300	277	311	374	327	362	442
XS	14	14	11	11	11	37	37	37	37	37	37

BSAF602..

55 019 00 07

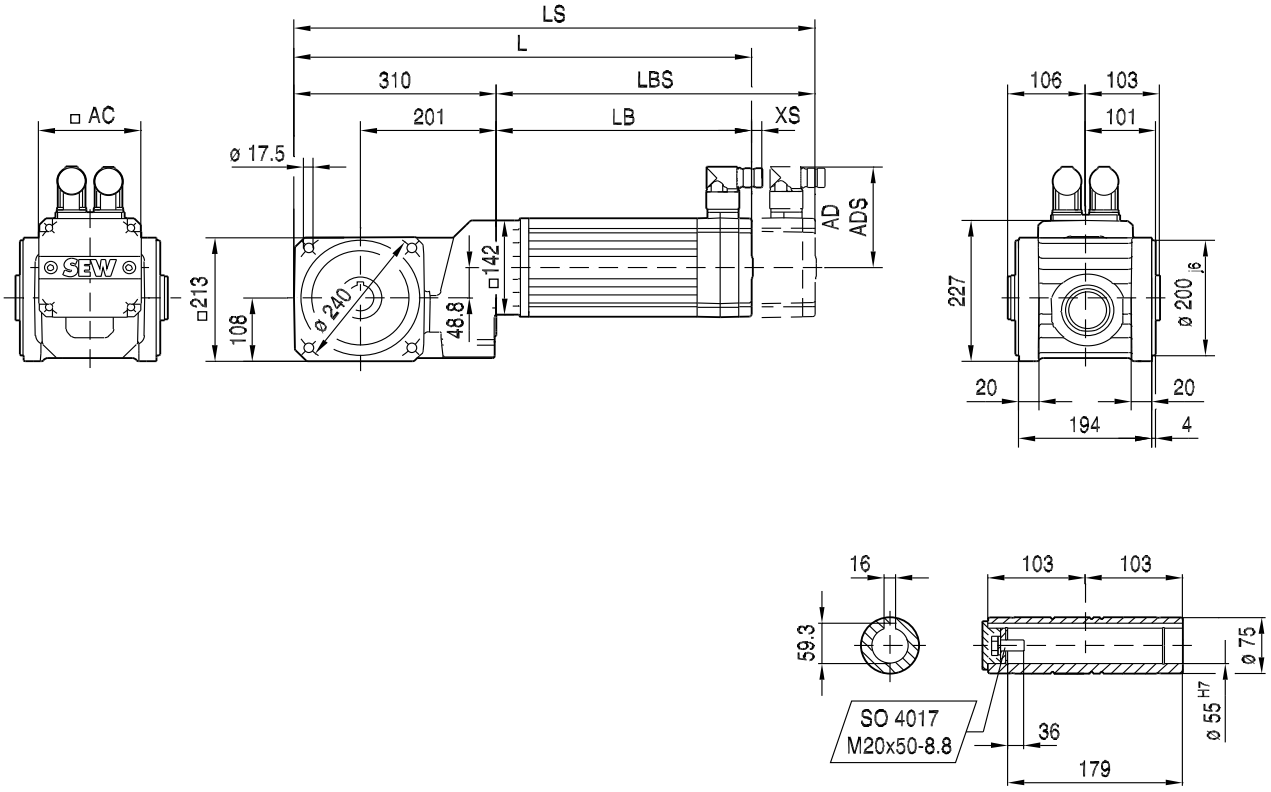

(→ 144)	CMP63M	CMP63L	CMP71S	CMP71M	CMP71L	CMP80S	CMP80M	CMP80L	CMP100S	CMP100M	CMP100L
AC	88	88	115	115	115	137	137	137	162	162	162
AD	92	92	102	102	102	134	134	134	146	146	146
ADS	92	92	104	104	104	137	137	137	147	147	147
L	528	578	470	495	545	509	543	606	541	576	656
LS	557	607	535	560	610	587	621	684	637	672	752
LB	218	268	160	185	235	199	233	296	231	266	346
LBS	247	297	225	250	300	277	311	374	327	362	442
XS	14	14	11	11	11	37	37	37	37	37	37

13.2.6 BS.F 802

M_{aDyn} [Nm]		CMP							
	i	71M	71L	80S	80M	80L	100S	100M	100L
BSF802 2	4.00					400		405	670
	6.00		265	235	350	600	385	610	1010
	8.00	230	350	315	470	800	515	810	1340
	10.00					970		980	1630
	12.00	345	530	475	705		770		
	15.00		640	575	850	1460	930	1470	>1680
	20.00	560	850	765	1140	>1680	1240	>1680	>1680
	25.00	700	1060	950	1420	>1680	1550	>1680	>1680
	30.00	840	1280	1150	>1680		>1680		
	35.00	980	1490	1340					
	40.00	1120	>1680	1530					

→ 144

m [kg]		CMP							
	s	71M	71L	80S	80M	80L	100S	100M	100L
BSF802	2	83	85	88	91	95	96	100	110
BSBF: + 1.1 kg / BSHF: + -3.5 kg									

CMP..				M1			M2;M4			M3;M5-6			φ		
	i	n_{epk} [1/min]	η [%]	a_0	a_1	a_2	a_0	a_1	a_2	a_0	a_1	a_2	[']	/R [']	/M [']
BSF802 2	4.00	4500	94.1	36.53	-0.257	380872	85.55	-0.552	372271	94.47	-0.447	370986	6	3	-
	6.00	4500	94.2	38.78	-0.322	379127	97.23	-0.720	369115	110.3	-0.584	367673	6	3	-
	8.00	4500	94.3	40.01	-0.368	378029	104.5	-0.839	367166	120.4	-0.682	365688	6	3	-
	10.00	4500	91.2	-23.29	-0.920	247749	61.41	-2.162	238512	91.96	-1.769	237008	6	3	-
	12.00	4500	94.3	41.33	-0.427	376719	112.6	-0.993	364991	131.8	-0.808	363576	6	3	-
	15.00	4500	91.2	-23.52	-1.178	245862	79.26	-2.866	235221	119.0	-2.352	233398	6	3	-
	20.00	4500	91.2	-23.77	-1.359	244661	87.97	-3.354	233524	136.4	-2.767	231226	6	3	-
	25.00	4500	91.2	-24.68	-1.491	243925	94.41	-3.718	232349	148.6	-3.076	229783	6	3	-
	30.00	4500	91.3	-25.17	-1.592	243363	99.42	-3.997	231420	158.0	-3.315	228644	6	3	-
	35.00	4500	91.3	-25.61	-1.671	242945	102.3	-4.214	230843	165.1	-3.503	227831	6	3	-
	40.00	4500	91.4	-26.02	-1.735	242626	107.0	-4.402	230135	170.8	-3.656	227184	6	3	-

CMP..							c_T			F_{Ramax}			F_{Rapk}		
n_e = 1500	i	M_{amax} [Nm]	M_{apk} [Nm]	$M_{aNotaus}$ [Nm]	n_{ak} [1/min]	J_{GA} 10^{-4} [kgm^2]	BSF [Nm/']	BSBF [Nm/']	BSHF [Nm/']	BSF [N]	BSBF [N]	BSHF [N]	BSF [N]	BSBF [N]	BSHF [N]
BSF802 2	4.00	1240	1860	2790	425	70	95	112	103	29600	34800	29500	36000	36000	36000
	6.00	1370	1910	2860	267	34	106	126	115	33500	36000	33500	36000	36000	36000
	8.00	1500	1910	2860	225	21	107	128	117	36000	36000	36000	36000	36000	36000
	10.00	1220	1680	2520	190	32	149	193	170	36000	36000	36000	36000	36000	36000
	12.00	1500	1910	2860	167	11	114	139	126	36000	36000	36000	36000	36000	36000
	15.00	1220	1680	2520	180	18	154	202	176	36000	36000	36000	36000	36000	36000
	20.00	1220	1680	2520	190	12	154	202	176	36000	36000	36000	36000	36000	36000
	25.00	1220	1680	2520	180	8.5	157	207	180	36000	36000	36000	36000	36000	36000
	30.00	1220	1680	2520	180	6.5	157	208	181	36000	36000	36000	36000	36000	36000
	35.00	1220	1680	2520	191	5.1	156	205	178	36000	36000	36000	36000	36000	36000
	40.00	1220	1680	2520	175	4.2	156	206	179	36000	36000	36000	36000	36000	36000

BSF802..

55 022 00 06

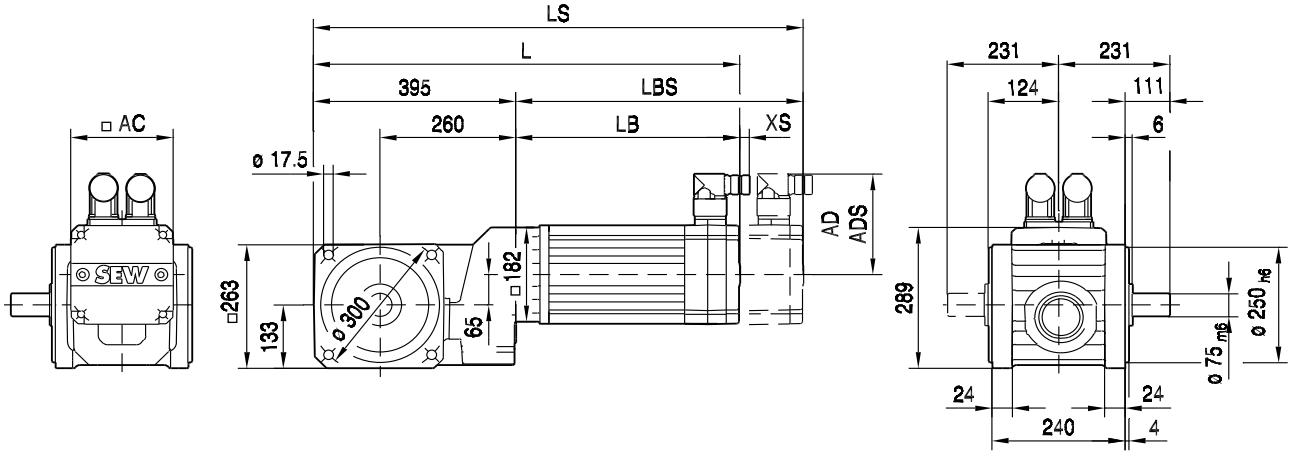

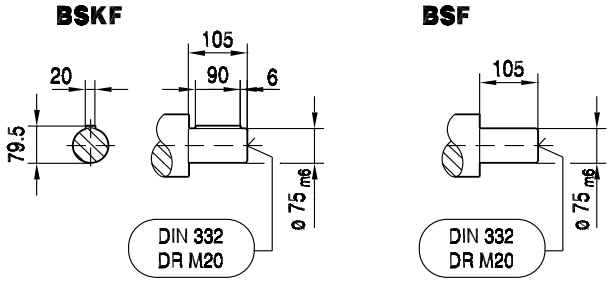

(→ 144)	CMP71M	CMP71L	CMP80S	CMP80M	CMP80L	CMP100S	CMP100M	CMP100L
AC	115	115	137	137	137	162	162	162
AD	102	102	134	134	134	146	146	146
ADS	104	104	137	137	137	147	147	147
L	576	626	590	624	687	622	657	737
LS	641	691	668	702	765	718	753	833
LB	181	231	195	229	292	227	262	342
LBS	246	296	273	307	370	323	358	438
XS	11	11	37	37	37	37	37	37

BSBF802..

55 023 00 06

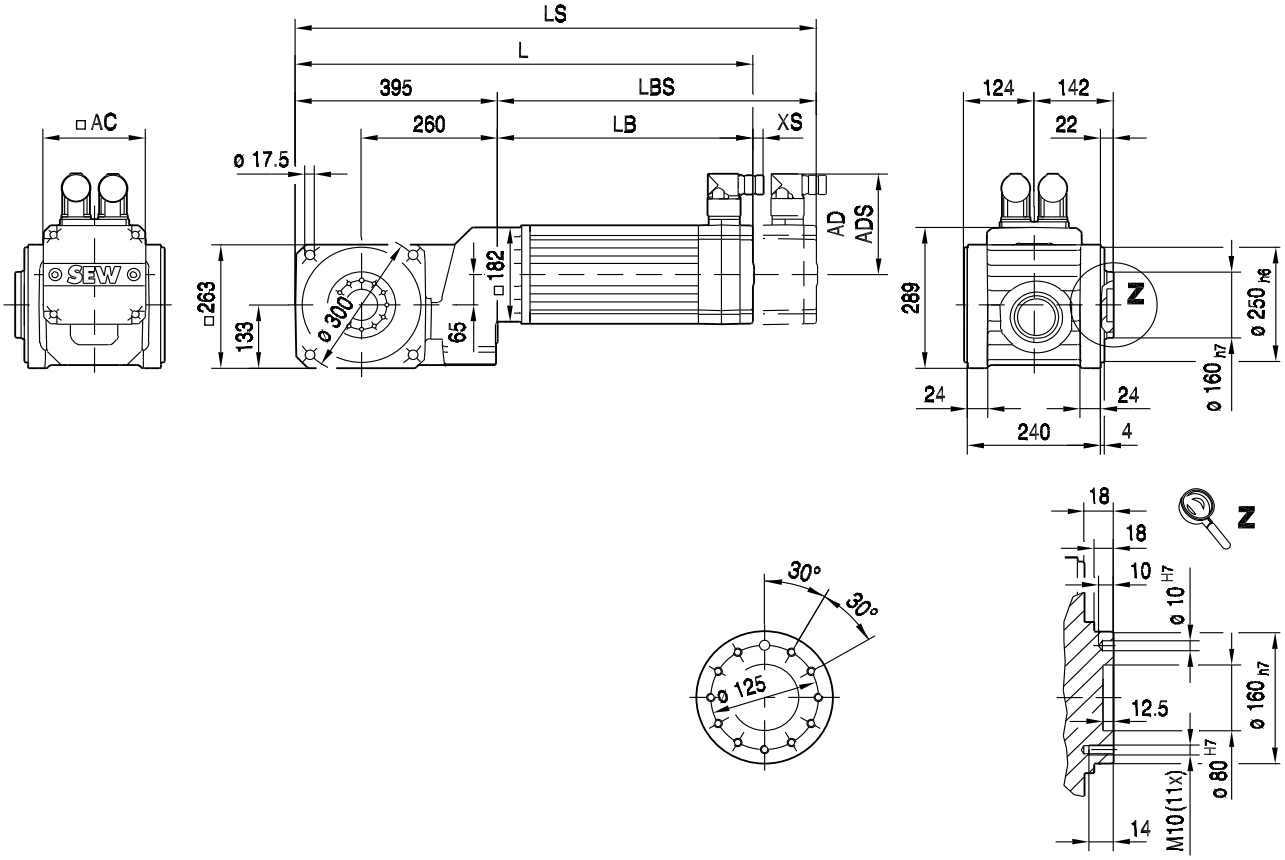

(→ 144)	CMP71M	CMP71L	CMP80S	CMP80M	CMP80L	CMP100S	CMP100M	CMP100L
AC	115	115	137	137	137	162	162	162
AD	102	102	134	134	134	146	146	146
ADS	104	104	137	137	137	147	147	147
L	576	626	590	624	687	622	657	737
LS	641	691	668	702	765	718	753	833
LB	181	231	195	229	292	227	262	342
LBS	246	296	273	307	370	323	358	438
XS	11	11	37	37	37	37	37	37

BSHF802..

55 024 00 06

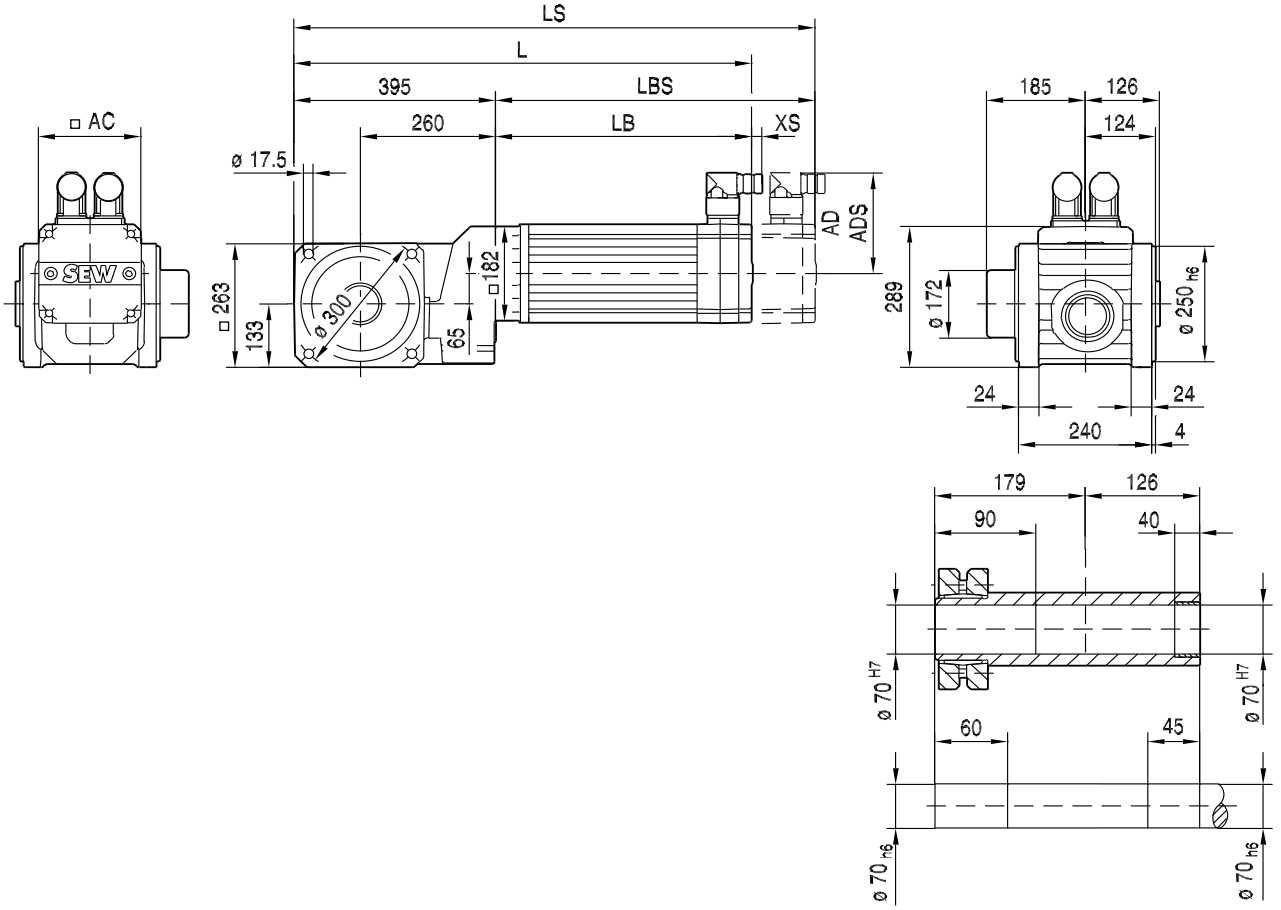

(→ 144)	CMP71M	CMP71L	CMP80S	CMP80M	CMP80L	CMP100S	CMP100M	CMP100L
AC	115	115	137	137	137	162	162	162
AD	102	102	134	134	134	146	146	146
ADS	104	104	137	137	137	147	147	147
L	576	626	590	624	687	622	657	737
LS	641	691	668	702	765	718	753	833
LB	181	231	195	229	292	227	262	342
LBS	246	296	273	307	370	323	358	438
XS	11	11	37	37	37	37	37	37

BSHF802/I..

55 025 00 06

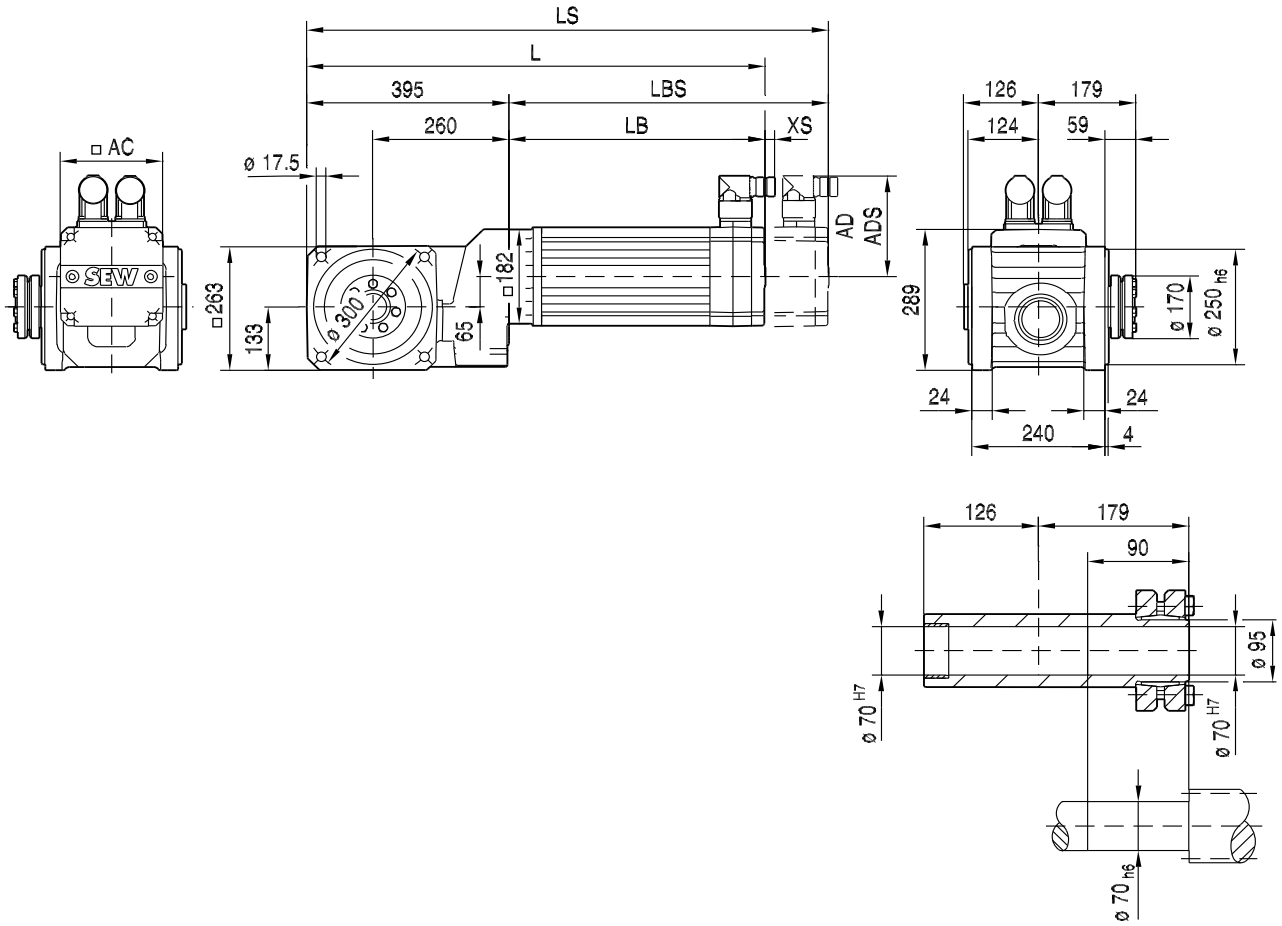

(→ 144)	CMP71M	CMP71L	CMP80S	CMP80M	CMP80L	CMP100S	CMP100M	CMP100L
AC	115	115	137	137	137	162	162	162
AD	102	102	134	134	134	146	146	146
ADS	104	104	137	137	137	147	147	147
L	576	626	590	624	687	622	657	737
LS	641	691	668	702	765	718	753	833
LB	181	231	195	229	292	227	262	342
LBS	246	296	273	307	370	323	358	438
XS	11	11	37	37	37	37	37	37

BSAF802..

55 020 00 07

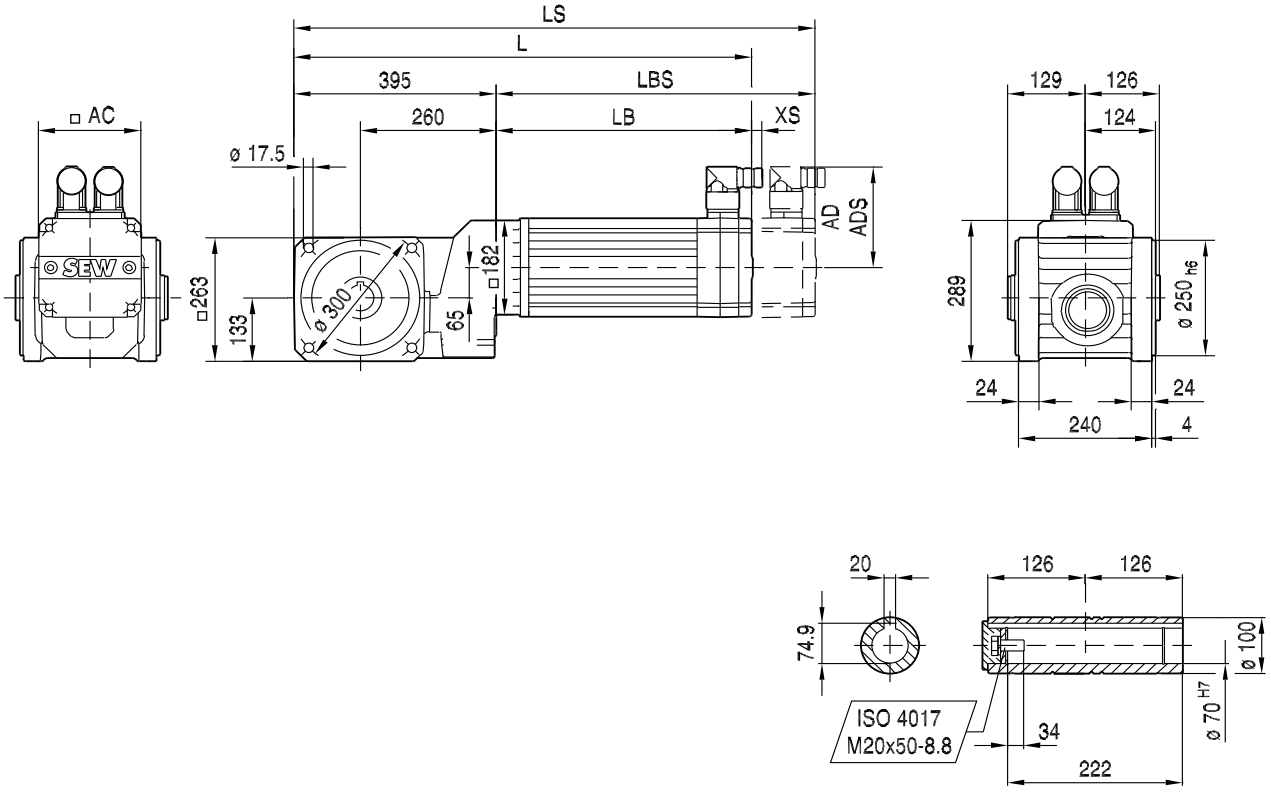

(→ 📖 144)	CMP71M	CMP71L	CMP80S	CMP80M	CMP80L	CMP100S	CMP100M	CMP100L
AC	115	115	137	137	137	162	162	162
AD	102	102	134	134	134	146	146	146
ADS	104	104	137	137	137	147	147	147
L	576	626	590	624	687	622	657	737
LS	641	691	668	702	765	718	753	833
LB	181	231	195	229	292	227	262	342
LBS	246	296	273	307	370	323	358	438
XS	11	11	37	37	37	37	37	37

13.3 BSF..B [mm]

BS..B

55 037 00 03

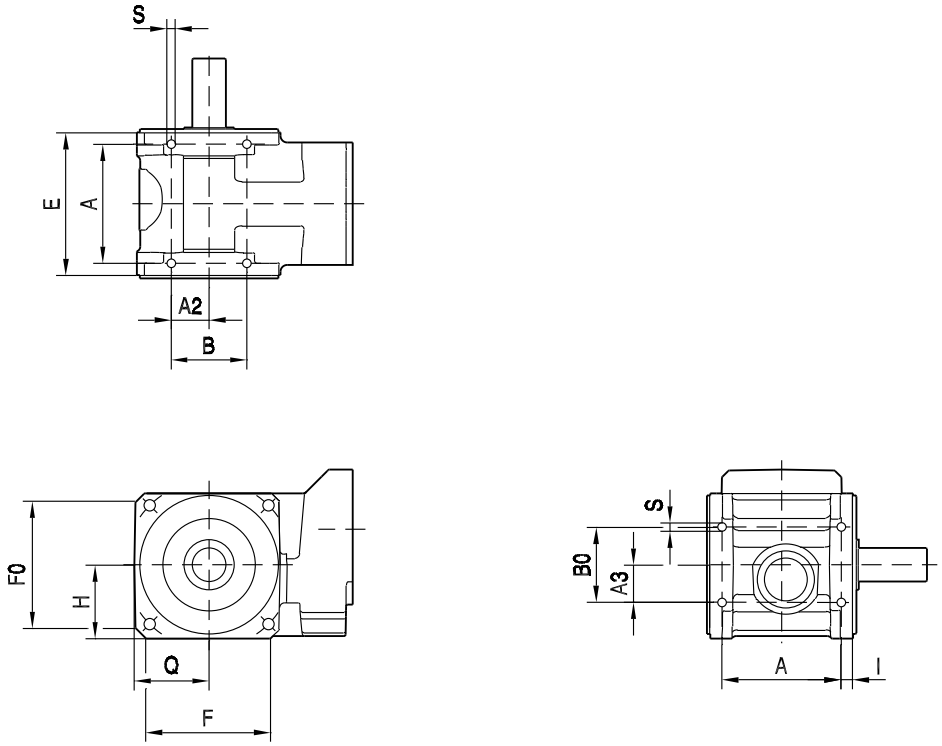

(→ 78)	E	A	S	A2	B	F	H	Q	F0	B0	A3	I
BS..202B	111	96	M8x14	30	60	80	$47_{-0.3}$	$47_{-0.3}$	78	60	30	7.5
BS..302B	123	105	M10x18	37.5	75	101	$58.5_{-0.3}$	$58.5_{-0.3}$	98.5	75	37.5	9
BS..402B	145	120	M12x22	46.5	93	127	$72_{-0.3}$	$72_{-0.3}$	125	93	46.5	12.5
BS..502B	170	142	M12x16	45	90	151	$86_{-0.5}$	$86_{-0.5}$	151	90	45	14
BS..602B	194	160	M16x20	50	100	182	$106_{-0.5}$	$106_{-0.5}$	183	100	50	17
BS..802B	240	186	M20x25	65	130	239	$131_{-0.5}$	$131_{-0.5}$	237	130	65	27

13.4 BSHF../T EBH.. [mm]

BSHF../T **55 038 00 03**

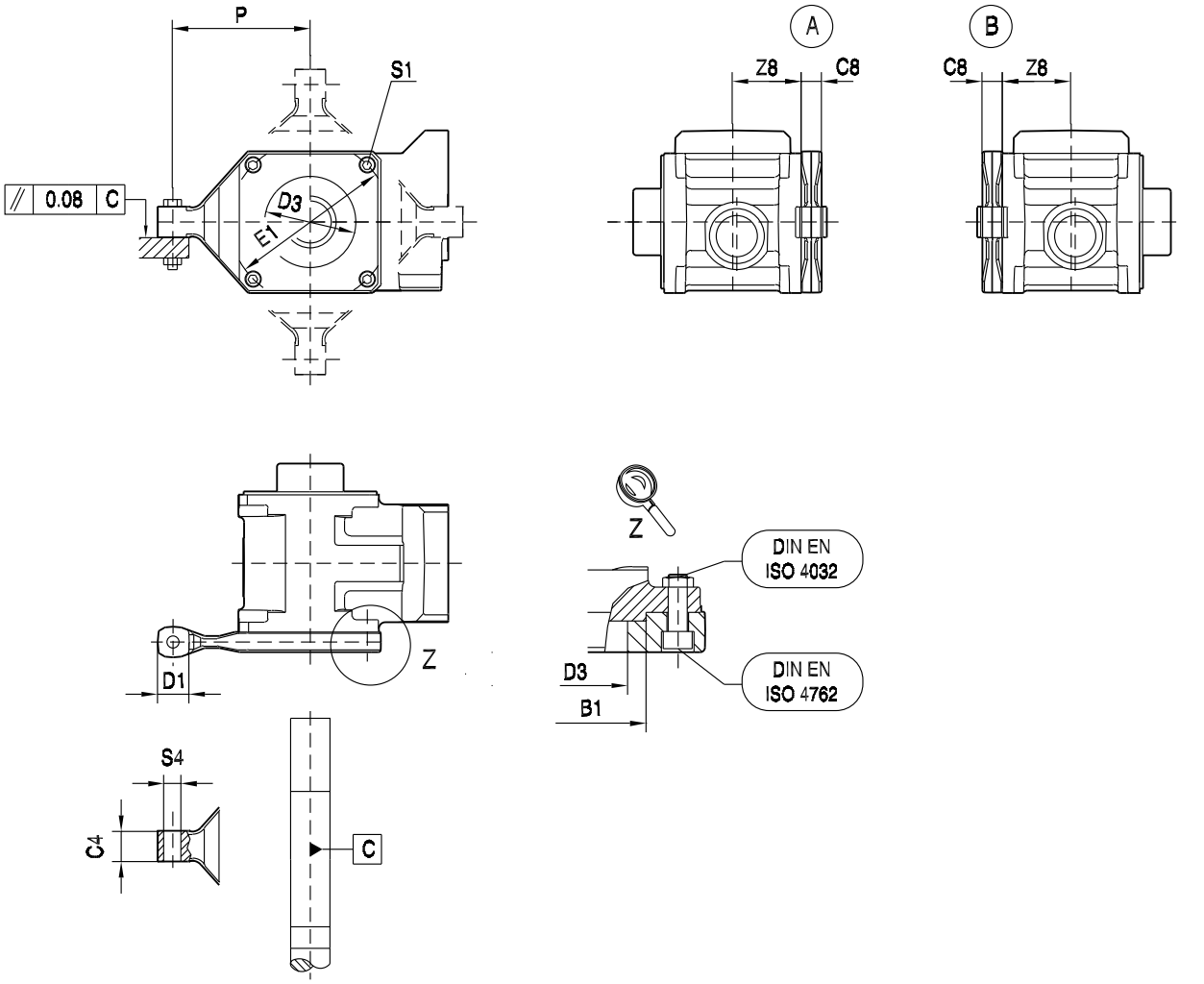

(→ 📖 144)	P	B1	E1	D3	Z8	C8	D1	S4	C4	S1							
BSHF202/T	110	90	109	75	55.5	18	34	14	20	M6x35							
BSHF302/T	140	110	135	90	61.5	20	38	14	24	M8x40							
BSHF402/T	158	140	168	115	72.5	22	38	14	28	M10x45							
BSHF502/T	170	165	200	140	85	25	38	14	38	M12x40							
BSHF602/T	198	200	240	140	97	35	58	22	50	M16x55							
BSHF802/T	278	250	300	195	120	34	58	22	70	M16x55							

13.5 BSBF EBH.. [mm]

55 035 02 03

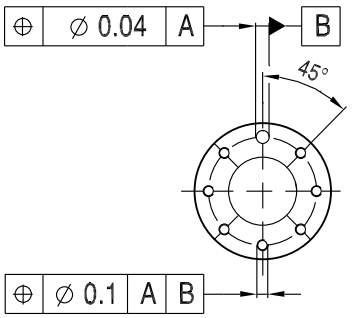

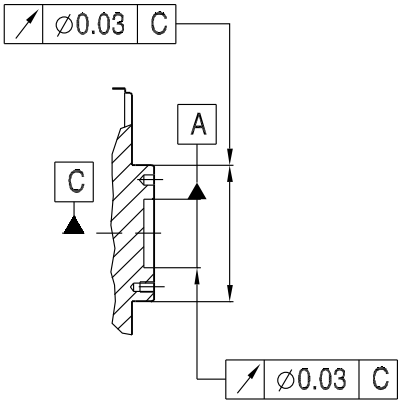

BSBF202 PSBF221/222
BSBF302 PSBF321/322

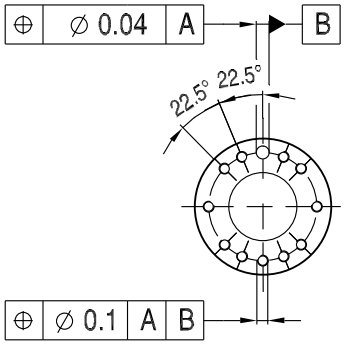

BSBF402 PSBF521/522
BSBF502

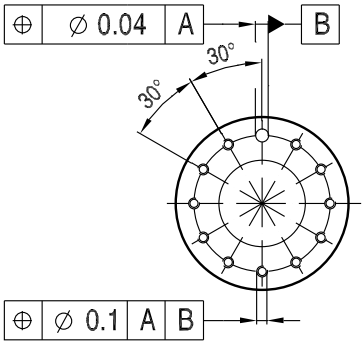

BSBF602 PSBF621/622
BSBF802 PSBF721/722
PSBF821/822

55 036 00 03

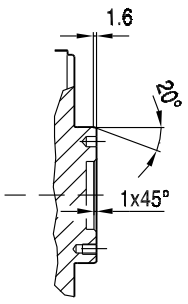

14 PSF/PSBF..CMP

14.1 PSF, PSKF, PSBF..CMP

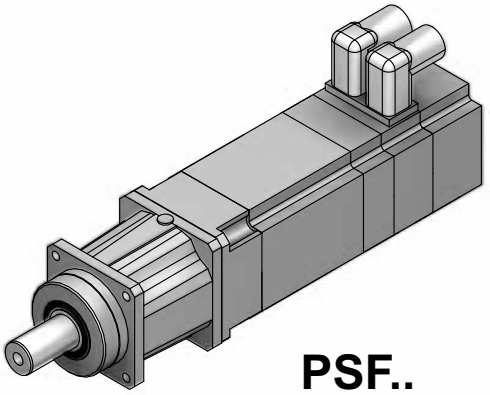

PSF..

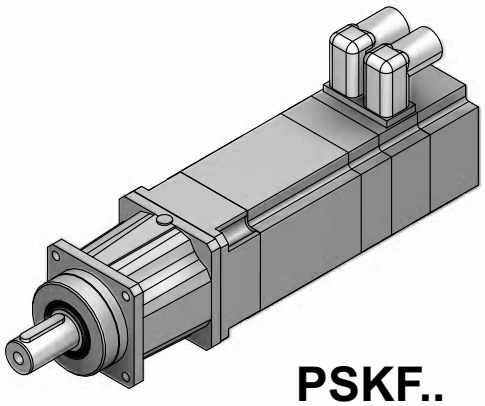

PSKF..

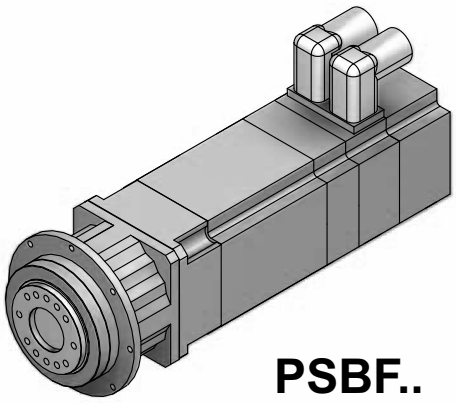

PSBF..

63321axx

14.2 PSF..[mm]

14.2.1 PS.F 121/122

M_{aDyn} [Nm]		CMP			
	i	40M	50S	50M	50L
PSF121 1	3.00		15	31	>36
	4.00	15	21	>38	>38
	5.00	19	26	>35	>35
	7.00	26	36		
	10.00	>26			
PSF122 2	16.00	>38	>38	>38	>38
	20.00	>35	>35	>35	>35
	25.00	>35	>35	>35	>35
	28.00	>33	>33		
	35.00	>35	>35		
	40.00	>32			
	49.00	>37	>37		
	70.00	>37			
	100.00	>26			

→ 144

m [kg]		CMP			
	s	40M	50S	50M	50L
PSF121	1	3.0	3.7	4.6	5.5
PSF122	2	3.6	4.3	5.2	6.1

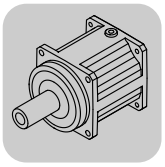

PSF/PSBF..CMP

PSF..[mm]

CMP..				M1;M3;M5-6			M2			M4			φ		
	i	n_{epk} [1/min]	η [%]	a_0	a_1	a_2	a_0	a_1	a_2	a_0	a_1	a_2	[']	/R [']	/M [']
PSF121 1	3.00	8000	99	68.00	-0.058	0	77.00	-0.082	0	78.00	-0.101	0	8	4	2
	4.00	8000	99	94.00	-0.086	0	106.0	-0.120	0	104.0	-0.142	0	8	4	2
	5.00	8000	99	96.00	-0.096	0	109.0	-0.130	0	108.0	-0.141	0	8	4	2
	7.00	8000	99	107.0	-0.126	0	120.0	-0.164	0	118.0	-0.191	0	8	4	2
	10.00	8000	99	107.0	-0.155	0	121.0	-0.198	0	129.0	-0.253	0	8	4	2
PSF122 2	16.00	8000	98	142.0	-0.366	0	190.0	-0.684	0	200	-0.761	0	10	6	3
	20.00	8000	98	168.0	-0.523	0	229	-1.007	0	238	-1.096	0	10	6	3
	25.00	8000	98	176.0	-0.608	0	235	-1.098	0	244	-1.190	0	10	6	3
	28.00	8000	98	163.0	-0.561	0	205	-0.895	0	214	-0.979	0	10	6	3
	35.00	8000	98	194.0	-0.819	0	247	-1.321	0	255	-1.416	0	10	6	3
	40.00	8000	98	193.0	-0.855	0	230	-1.206	0	237	-1.289	0	10	6	3
	49.00	8000	98	263	-1.518	0	339	-2.492	0	347	-2.616	0	10	6	3
	70.00	8000	98	316	-2.373	0	380	-3.394	0	388	-3.528	0	10	6	3
	100.00	8000	98	420	-4.459	0	512	-6.456	0	519	-6.643	0	10	6	3

CMP.. n_e = 1500	i	M_{amax} [Nm]	M_{apk} [Nm]	$M_{aNotaus}$ [Nm]	n_{ak} [1/min]	J_{GA} 10^{-4} [kgm^2]	c_T PSF [Nm/']	F_{Ramax} PSF [N]	F_{Rapk} PSF [N]
PSF121 1	3.00	20	36	54	2333	0.088	2.1	2000	1900
	4.00	25	38	57	1750	0.044	2.2	1980	1890
	5.00	25	35	53	1400	0.029	2.2	1980	1910
	7.00	25	37	56	1000	0.015	2.0	1980	1900
	10.00	25	26	39	700	0.008	1.5	1980	1970
PSF122 2	16.00	25	38	57	438	0.037	2.0	1980	1890
	20.00	25	35	53	350	0.024	2.0	1980	1910
	25.00	25	35	53	280	0.024	1.9	1980	1910
	28.00	25	33	50	250	0.013	1.9	1980	1930
	35.00	25	35	53	200	0.012	1.9	1980	1910
	40.00	25	32	48	175	0.006	1.8	1980	1930
	49.00	25	37	56	143	0.012	1.8	1980	1900
	70.00	25	37	56	100	0.006	1.7	1980	1900
	100.00	25	26	39	70	0.006	1.4	1980	1970

57 026 00 06

PSF121..

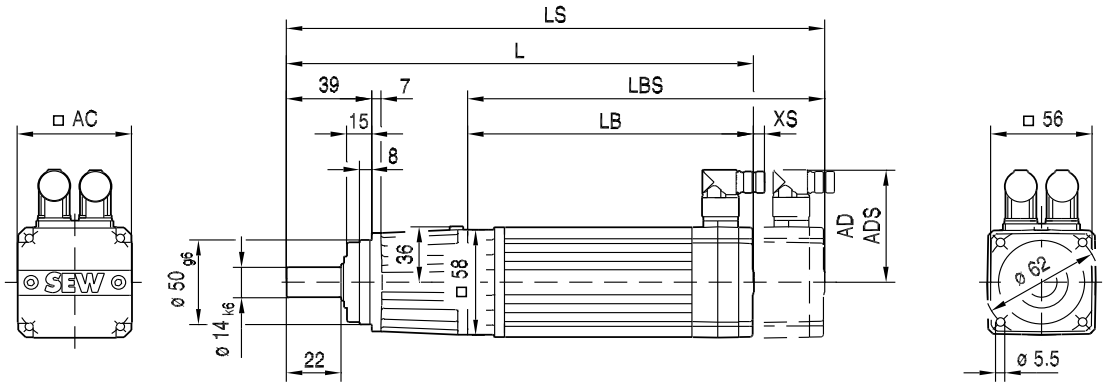

PSF

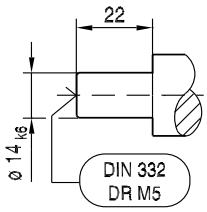

PSKF

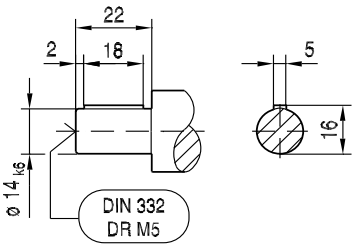

(→ 144)	CMP40M	CMP50S	CMP50M	CMP50L				
AC	57	73	73	73				
AD	78	86	86	86				
ADS	78	86	86	86				
L	254	255	294	333				
LS	284	284	323	362				
LB	156	157	196	235				
LBS	186	186	225	264				
XS	19	18	18	18				

57 027 00 06

PSF122..

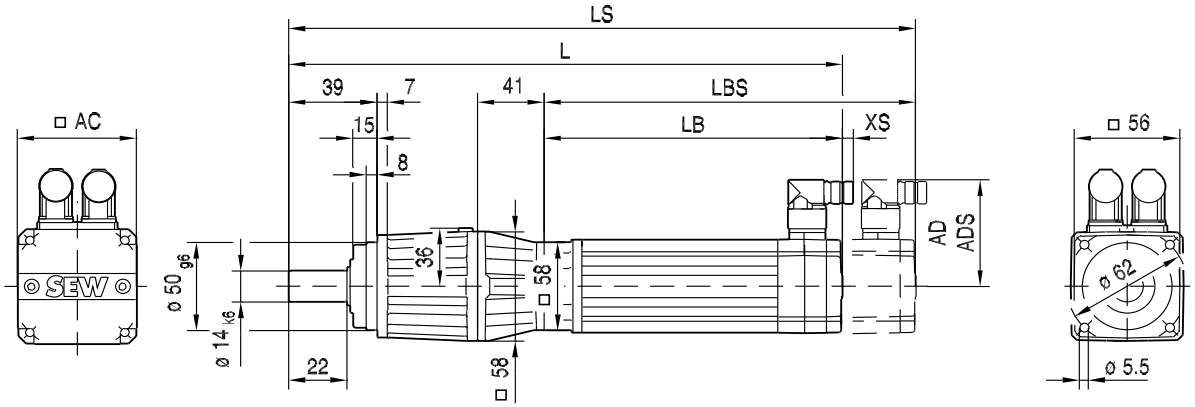

PSF

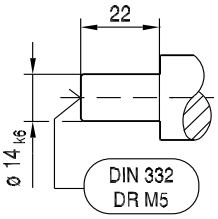

PSKF

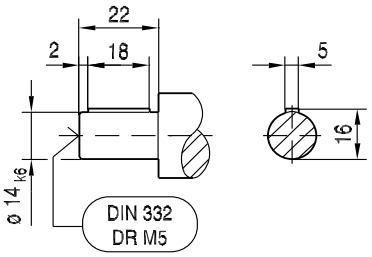

(→ 144)	CMP40M	CMP50S	CMP50M	CMP50L				
AC	57	73	73	73				
AD	78	86	86	86				
ADS	78	86	86	86				
L	295	296	335	374				
LS	325	325	364	403				
LB	156	157	196	235				
LBS	186	186	225	264				
XS	19	18	18	18				

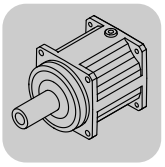

14.2.2 PS.F 221/222

M_{aDyn} [Nm]		CMP					
	i	40M	50S	50M	50L	63S	63M
PSF221  1	3.00		15	31	46	33	64
	4.00		21	41	61	44	85
	5.00		26	51	76	55	>80
	7.00		36	71	>85	77	>85
	10.00		51				
PSF222  2	16.00	60	82	>85	>85		
	20.00	74	>80	>80	>80		
	25.00	>80	>80	>80	>80		
	28.00	>83	>83				
	35.00	>80	>80				
	40.00	>79					
	49.00	>85	>85				
	70.00	>85					
	100.00	>62					

→ 144

m [kg]		CMP					
	s	40M	50S	50M	50L	63S	63M
PSF221	1	3.6	4.4	5.3	6.2	6.6	8.1
PSF222	2	4.4	5.1	6.0	6.9	7.4	8.8

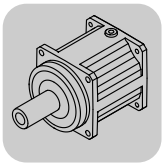

PSF/PSBF..CMP

PSF..[mm]

CMP..				M1;M3;M5-6			M2			M4			φ		
	i	n_{epk} [1/min]	η [%]	a_0	a_1	a_2	a_0	a_1	a_2	a_0	a_1	a_2	[']	/R [']	/M [']
PSF221 1	3.00	7500	99	109.0	-0.092	0	126.0	-0.144	0	129.0	-0.181	0	6	3	1
	4.00	7500	99	153.0	-0.134	0	179.0	-0.210	0	181.0	-0.258	0	6	3	1
	5.00	7500	99	153.0	-0.142	0	179.0	-0.218	0	179.0	-0.264	0	6	3	1
	7.00	7500	99	169.0	-0.177	0	196.0	-0.260	0	202	-0.325	0	6	3	1
	10.00	7500	99	158.0	-0.197	0	183.0	-0.276	0	201	-0.377	0	6	3	1
PSF222 2	16.00	8000	98	187.0	-0.438	0	237	-0.779	0	251	-0.896	0	8	4	2
	20.00	8000	98	210	-0.591	0	274	-1.092	0	287	-1.220	0	8	4	2
	25.00	8000	98	219	-0.675	0	281	-1.180	0	294	-1.312	0	8	4	2
	28.00	8000	98	214	-0.653	0	259	-1.015	0	273	-1.143	0	8	4	2
	35.00	8000	98	245	-0.908	0	302	-1.441	0	315	-1.583	0	8	4	2
	40.00	8000	98	235	-0.911	0	273	-1.268	0	283	-1.391	0	8	4	2
	49.00	8000	98	320	-1.613	0	403	-2.620	0	415	-2.796	0	8	4	2
	70.00	8000	98	363	-2.362	0	432	-3.370	0	442	-3.550	0	8	4	2
	100.00	8000	98	461	-4.232	0	560	-6.162	0	570	-6.394	0	8	4	2

CMP.. n_e = 1500	i	M_{amax} [Nm]	M_{apk} [Nm]	$M_{aNotaus}$ [Nm]	n_{ak} [1/min]	J_{GA} 10^{-4} [kgm^2]	c_T PSF [Nm/']	F_{Ramax} PSF [N]	F_{Rapk} PSF [N]
PSF221 1	3.00	40	65	98	2333	0.23	3.6	2870	2440
	4.00	55	85	128	1750	0.12	3.7	2680	1720
	5.00	55	80	120	1400	0.077	3.7	2680	1950
	7.00	55	85	128	1000	0.041	3.5	2680	1720
	10.00	55	62	93	700	0.020	2.8	2680	2520
PSF222 2	16.00	55	85	128	438	0.042	3.2	2680	1720
	20.00	55	80	120	350	0.028	3.3	2680	1950
	25.00	55	80	120	280	0.026	3.2	2680	1950
	28.00	55	83	125	250	0.014	3.1	2680	1820
	35.00	55	80	120	200	0.013	3.1	2680	1950
	40.00	55	79	119	175	0.007	2.8	2680	1990
	49.00	55	85	128	143	0.013	3.1	2680	1720
	70.00	55	85	128	100	0.006	2.9	2680	1720
	100.00	55	62	93	70	0.006	2.5	2680	2520

57 028 00 06

PSF221..

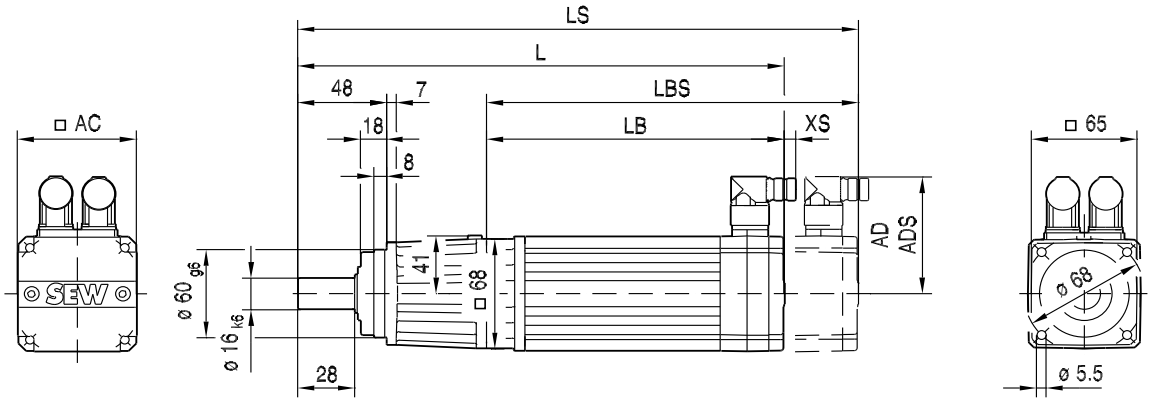

PSF

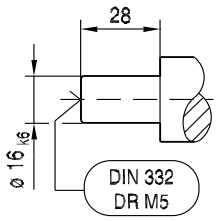

PSKF

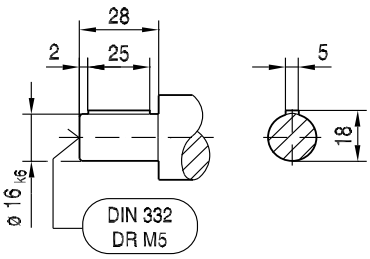

(→ 144)	CMP50S	CMP50M	CMP50L	CMP63S	CMP63M			
AC	73	73	73	88	88			
AD	86	86	86	92	92			
ADS	86	86	86	92	92			
L	269	308	347	304	354			
LS	298	337	376	333	383			
LB	151	190	229	186	236			
LBS	180	219	258	215	265			
XS	18	18	18	14	14			

57 029 00 06

PSF222..

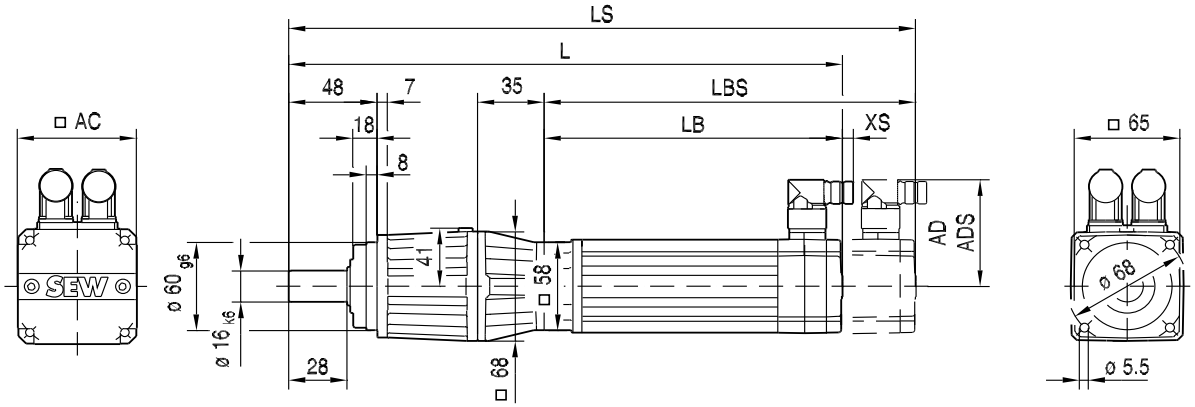

PSF

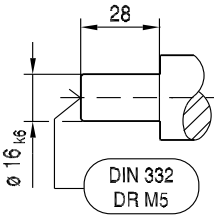

PSKF

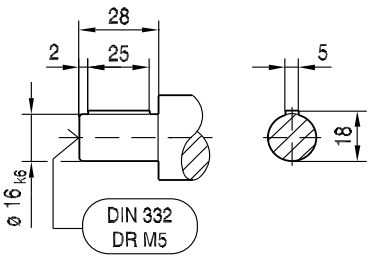

(→ 📖 144)	CMP40M	CMP50S	CMP50M	CMP50L				
AC	57	73	73	73				
AD	78	86	86	86				
ADS	78	86	86	86				
L	309	310	349	388				
LS	339	339	378	417				
LB	156	157	196	235				
LBS	186	186	225	264				
XS	19	18	18	18				

14.2.3 PS.F 321/322

M_{aDyn} [Nm]		CMP							
	i	50S	50M	50L	63S	63M	63L	71S	71M
PSF321 1	3.00		31	46	33	64	90	57	91
	4.00	21	41	61	44	85	120	76	122
	5.00	26	51	76	55	106	150	95	152
	7.00	36	71	107	77	148	>168	133	>168
	10.00	51	102	>121	110				
PSF322 2	16.00	82	>153	>153	>153	>153			
	20.00	102	>169	>169	>169	>169			
	25.00	127	>169	>169	>169	>169			
	28.00	143	>145	>145	>145	>145			
	35.00	>169	>169	>169	>169	>169			
	40.00	>142							
	49.00	>168	>168	>168	>168	>168			
	70.00	>168							
	100.00	>121							

→ 144

m [kg]		CMP							
	s	50S	50M	50L	63S	63M	63L	71S	71M
PSF321	1	6.7	7.6	8.5	8.0	9.5	11	12	13
PSF322	2	8.2	9.1	10.0	9.5	11	12	14	15

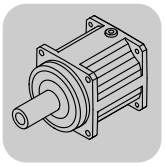

PSF/PSBF..CMP

PSF..[mm]

CMP..				M1;M3;M5-6			M2			M4			φ		
	i	n_{epk} [1/min]	η [%]	a_0	a_1	a_2	a_0	a_1	a_2	a_0	a_1	a_2	[']	/R [']	/M [']
PSF321 1	3.00	7000	99	205	-0.222	0	234	-0.327	0	288	-0.595	0	6	3	1
	4.00	7000	99	276	-0.316	0	312	-0.455	0	387	-0.833	0	6	3	1
	5.00	7000	99	290	-0.355	0	328	-0.501	0	414	-0.930	0	6	3	1
	7.00	7000	99	296	-0.418	0	335	-0.581	0	422	-1.036	0	6	3	1
	10.00	7000	99	269	-0.477	0	302	-0.617	0	374	-1.016	0	6	3	1
PSF322 2	16.00	7500	98	312	-0.710	0	400	-1.349	0	430	-1.630	0	8	4	2
	20.00	7500	98	366	-0.987	0	479	-1.946	0	508	-2.259	0	8	4	2
	25.00	7500	98	372	-1.053	0	522	-2.195	0	512	-2.336	0	8	4	2
	28.00	7500	98	331	-0.884	0	418	-1.557	0	449	-1.859	0	8	4	2
	35.00	7500	98	396	-1.263	0	505	-2.272	0	534	-2.609	0	8	4	2
	40.00	7500	98	348	-1.101	0	426	-1.769	0	453	-2.062	0	8	4	2
	49.00	7500	98	467	-1.995	0	616	-3.752	0	641	-4.128	0	8	4	2
	70.00	7500	98	502	-2.580	0	633	-4.341	0	657	-4.724	0	8	4	2
	100.00	7500	98	577	-4.137	0	756	-7.260	0	776	-7.704	0	8	4	2

CMP.. n_e = 1500	i	M_{amax} [Nm]	M_{apk} [Nm]	$M_{aNotaus}$ [Nm]	n_{ak} [1/min]	J_{GA} 10^{-4} [kgm^2]	c_T PSF [Nm/']	F_{Ramax} PSF [N]	F_{Rapk} PSF [N]
PSF321 1	3.00	85	125	188	2333	0.69	11	4380	5280
	4.00	110	170	255	1750	0.35	12	4770	4420
	5.00	110	169	250	1400	0.22	12	5100	4450
	7.00	110	168	250	1000	0.12	10	5480	4470
	10.00	110	121	182	700	0.059	7.6	5480	5330
PSF322 2	16.00	110	153	230	438	0.042	9.0	5480	4800
	20.00	110	169	250	350	0.028	9.4	5480	4450
	25.00	110	169	250	280	0.026	9.2	5480	4450
	28.00	110	145	215	250	0.014	8.8	5480	4950
	35.00	110	169	250	200	0.013	9.0	5480	4450
	40.00	110	142	210	175	0.007	7.7	5480	5000
	49.00	110	168	250	143	0.013	8.7	5480	4470
	70.00	110	168	250	100	0.006	8.1	5480	4470
	100.00	110	121	182	70	0.006	6.4	5480	5330

57 030 00 06

PSF321..

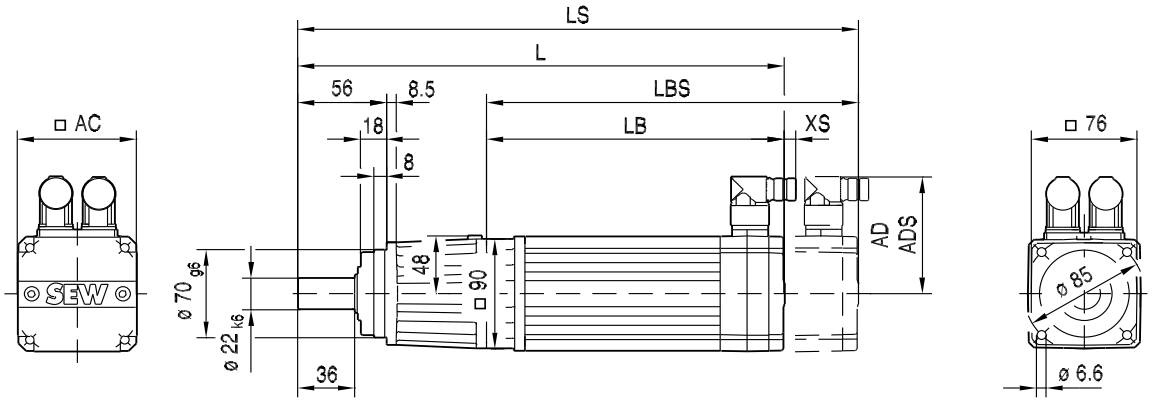

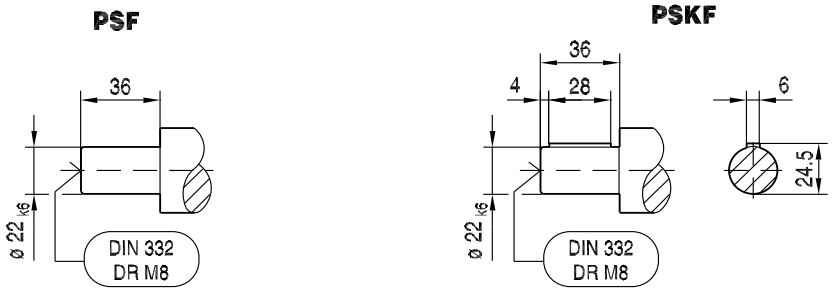

(→ 144)	CMP50S	CMP50M	CMP50L	CMP63S	CMP63M	CMP63L	CMP71S	CMP71M
AC	73	73	73	88	88	88	115	115
AD	86	86	86	92	92	92	102	102
ADS	86	86	86	92	92	92	104	104
L	291	330	369	326	376	426	318	343
LS	320	359	398	355	405	455	383	408
LB	146	185	224	181	231	281	173	198
LBS	175	214	253	210	260	310	238	263
XS	18	18	18	14	14	14	11	11

57 031 00 06

PSF322..

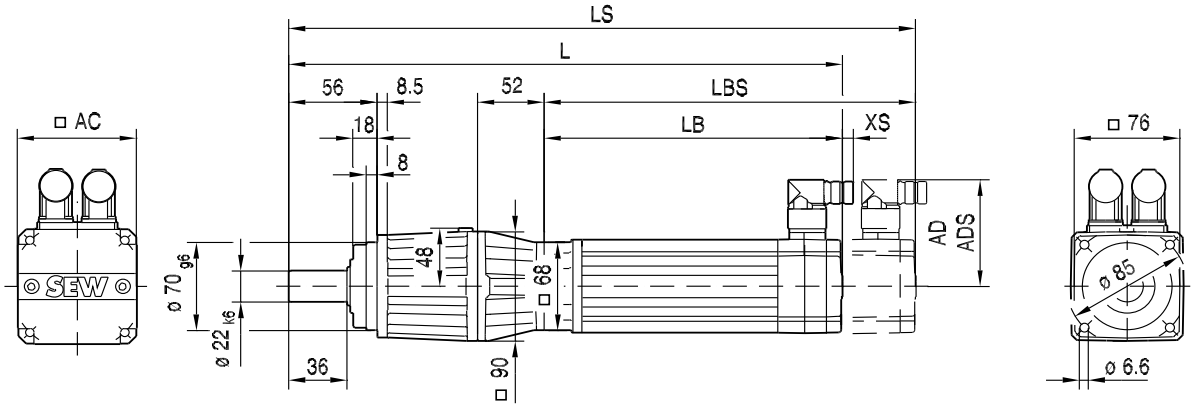

PSF

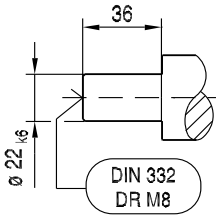

PSKF

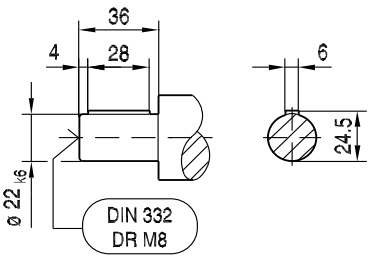

(→ 📖 144)	CMP50S	CMP50M	CMP50L	CMP63S	CMP63M			
AC	73	73	73	88	88			
AD	86	86	86	92	92			
ADS	86	86	86	92	92			
L	348	387	426	383	433			
LS	377	416	455	412	462			
LB	151	190	229	186	236			
LBS	180	219	258	215	265			
XS	18	18	18	14	14			

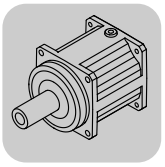

14.2.4 PS.F 521/522

M_{aDyn} [Nm]		CMP											
	i	50S	50M	50L	63S	63M	63L	71S	71M	71L	80S	80M	80L
PSF521 1	3.00									139	125	186	>280
	4.00					85	120	76	122	186	167	245	>385
	5.00		51	76	55	106	150	95	152	230	205	305	>375
	7.00		71	107	77	148	210	133	210	325	290	>360	
	10.00		102	152	110	210	>270	190	>270				
PSF522 2	16.00	82	162	240	174	335	>385	300	>385				
	20.00	102	200	300	215	>375	>375	>375	>375				
	25.00	127	250	>375	270	>375	>375	>375	>375				
	28.00	143	280	>385	300	>385	>385	>385	>385				
	35.00	178	350	>375	>375	>375	>375	>375	>375				
	40.00	200	>385	>385	>385								
	49.00	245	>360	>360	>360	>360	>360	>360	>360				
	70.00	355	>360	>360	>360								
	100.00	>270	>270	>270	>270								

→ 144

m [kg]		CMP											
	s	50S	50M	50L	63S	63M	63L	71S	71M	71L	80S	80M	80L
PSF521	1	9.9	11	12	12	13	15	16	17	19	22	24	28
PSF522	2	13	14	15	14	16	17	19	20	22	25	27	31

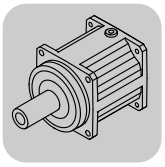

PSF/PSBF..CMP

PSF..[mm]

CMP..				M1;M3;M5-6			M2			M4			φ		
	i	n_{epk} [1/min]	η [%]	a_0	a_1	a_2	a_0	a_1	a_2	a_0	a_1	a_2	[']	/R [']	/M [']
PSF521 1	3.00	6000	99	445	-0.542	0	515	-0.834	0	676	-1.697	0	6	3	1
	4.00	6000	99	626	-0.806	0	736	-1.274	0	955	-2.483	0	6	3	1
	5.00	6000	99	633	-0.860	0	747	-1.345	0	964	-2.554	0	6	3	1
	7.00	6000	99	670	-1.029	0	805	-1.596	0	1024	-2.855	0	6	3	1
	10.00	6000	99	651	-1.253	0	752	-1.709	0	937	-2.831	0	6	3	1
PSF522 2	16.00	7000	98	683	-1.837	0	835	-3.238	0	888	-3.890	0	8	4	2
	20.00	7000	98	751	-2.385	0	981	-4.855	0	1107	-6.734	0	8	4	2
	25.00	7000	98	781	-2.642	0	1012	-5.183	0	1142	-7.143	0	8	4	2
	28.00	7000	98	732	-2.395	0	873	-3.829	0	924	-4.507	0	8	4	2
	35.00	7000	98	870	-3.860	0	1027	-5.742	0	1150	-7.701	0	8	4	2
	40.00	7000	98	759	-3.015	0	876	-4.378	0	919	-5.027	0	8	4	2
	49.00	7000	98	1064	-6.079	0	1323	-9.798	0	1445	-12.110	0	8	4	2
	70.00	7000	98	1122	-7.805	0	1331	-11.307	0	1424	-13.427	0	8	4	2
	100.00	7000	98	1077	-6.893	0	1467	-13.340	0	1576	-15.732	0	8	4	2

CMP.. n_e = 1500	i	M_{amax} [Nm]	M_{apk} [Nm]	$M_{aNotaus}$ [Nm]	n_{ak} [1/min]	J_{GA} 10^{-4} [kgm^2]	c_T PSF [Nm/']	F_{Ramax} PSF [N]	F_{Rapk} PSF [N]
PSF521 1	3.00	180	280	420	2333	2.7	29	6150	9540
	4.00	300	385	575	1750	1.4	32	6700	8680
	5.00	300	375	560	1400	0.92	32	7170	8780
	7.00	300	360	540	1000	0.48	28	7930	8920
	10.00	270	270	405	700	0.24	20	8820	9610
PSF522 2	16.00	300	385	575	431	0.38	24	9400	8680
	20.00	300	375	560	350	0.24	25	9400	8780
	25.00	300	375	560	280	0.23	25	9400	8780
	28.00	300	385	575	250	0.13	23	9400	8680
	35.00	300	375	560	200	0.12	24	9400	8780
	40.00	300	385	575	175	0.064	19	9400	8680
	49.00	300	360	540	143	0.11	23	9400	8920
	70.00	300	360	540	100	0.055	20	9400	8920
	100.00	270	270	405	70	0.052	17	9610	9610

57 032 00 06

PSF521..

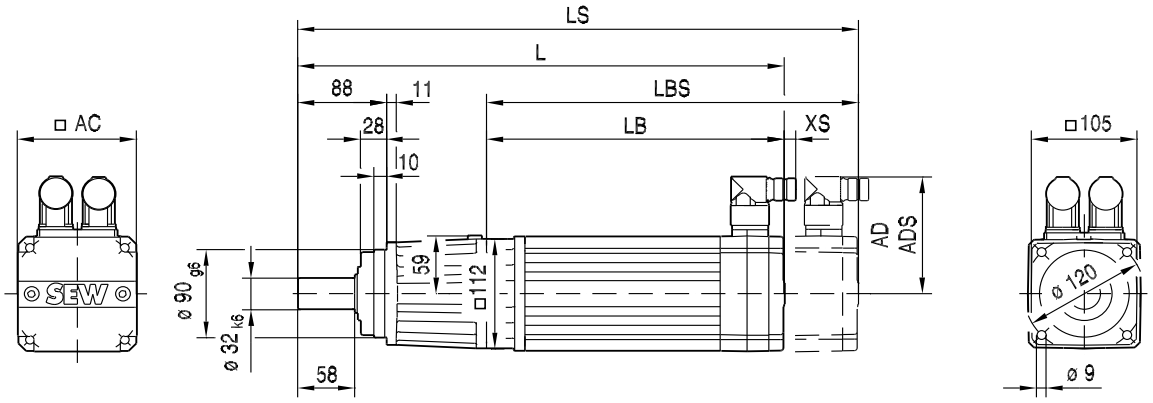

PSF

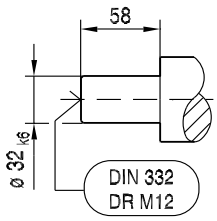

PSKF

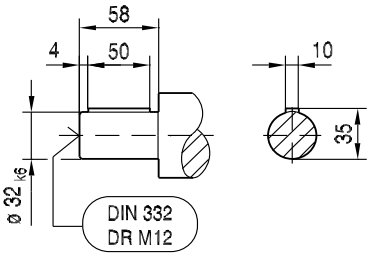

(→ 📖 144)	CMP50M	CMP50L	CMP63S	CMP63M	CMP63L	CMP71S	CMP71M	CMP71L	CMP80S	CMP80M	CMP80L
AC	73	73	88	88	88	115	115	115	137	137	137
AD	86	86	92	92	92	102	102	102	134	134	134
ADS	86	86	92	92	92	104	104	104	137	137	137
L	370	409	366	416	466	357	382	432	397	432	499
LS	399	438	394	444	494	422	447	497	474	509	576
LB	180	219	176	226	276	168	193	243	207	242	309
LBS	209	248	205	255	305	233	258	308	285	320	387
XS	18	18	14	14	14	11	11	11	37	37	37

57 033 00 06

PSF522..

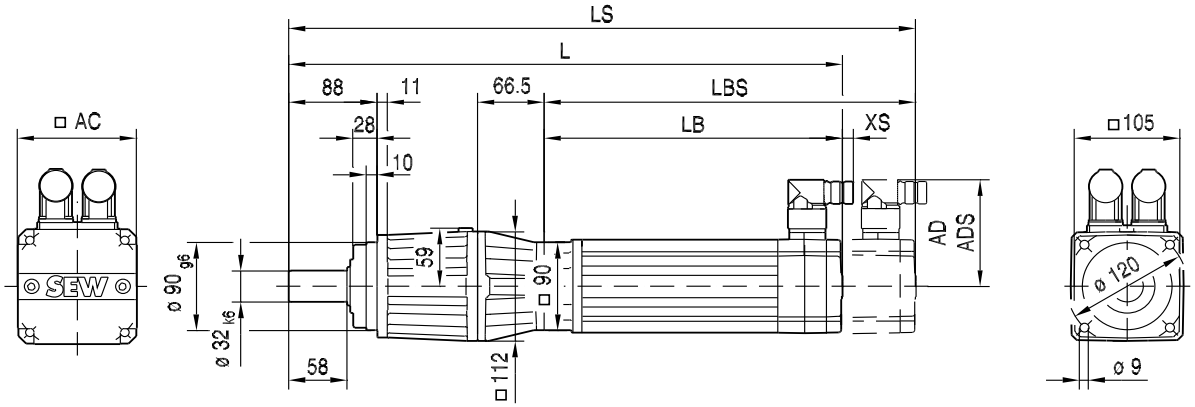

PSF

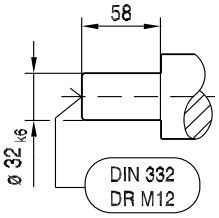

PSKF

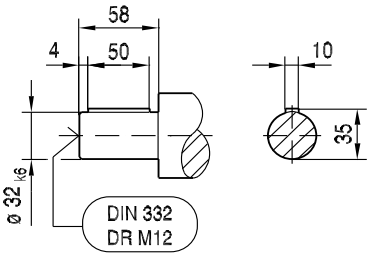

(→ 📖 144)	CMP50S	CMP50M	CMP50L	CMP63S	CMP63M	CMP63L	CMP71S	CMP71M
AC	73	73	73	88	88	88	115	115
AD	86	86	86	92	92	92	102	102
ADS	86	86	86	92	92	92	104	104
L	402	441	480	437	487	537	429	454
LS	431	470	509	466	516	566	494	519
LB	146	185	224	181	231	281	173	198
LBS	175	214	253	210	260	310	238	263
XS	18	18	18	14	14	14	11	11

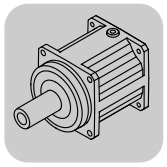

14.2.5 PS.F 621/622

M_{aDyn} [Nm]		CMP													
	i	50M	50L	63S	63M	63L	71S	71M	71L	80S	80M	80L	100S	100M	100L
PSF621 1	4.00								186	167	245	420	270	425	705
	5.00					150		152	230	205	305	525	335	530	>700
	7.00					210		210	325	290	430	>660	470	>660	
	10.00					300	190	300	460	415	>500		>500		
PSF622 2	16.00				335	475	300	480	735	660	>745	>745			
	20.00				415	595	375	600	>700	>700	>700	>700			
	25.00	250	375	270	520	>700	470	>700	>700	>700	>700	>700			
	28.00	280	420	300	585	>745	525	>745	>745	>745	>745				
	35.00	350	525	380	>700	>700	655	>700	>700	>700	>700				
	40.00	400	600	435	>745	>745	>745	>745							
	49.00	490	>660	530	>660	>660	>660	>660	>660	>660	>660				
	70.00	>660	>660	>660	>660	>660	>660	>660							
	100.00	>500	>500	>500	>500	>500	>500	>500							

→ 📖 144

m [kg]		CMP													
	s	50M	50L	63S	63M	63L	71S	71M	71L	80S	80M	80L	100S	100M	100L
PSF621	1	19	20	20	21	23	25	26	28	31	33	37	38	42	51
PSF622	2	24	25	25	27	29	30	31	33	36	38	42	43	47	56

CMP..				M1;M3;M5-6			M2			M4			φ		
	i	n_{epk} [1/min]	η [%]	a_0	a_1	a_2	a_0	a_1	a_2	a_0	a_1	a_2	[']	/R [']	/M [']
PSF621 1	4.00	6000	99	1186	-1.675	0	1399	-2.659	0	1830	-5.404	0	4	2	1
	5.00	6000	99	1176	-1.751	0	1402	-2.761	0	1836	-5.516	0	4	2	1
	7.00	6000	99	1290	-2.268	0	1505	-3.257	0	1948	-6.140	0	4	2	1
	10.00	6000	99	1059	-1.739	0	1306	-2.710	0	1764	-5.445	0	4	2	1
PSF622 2	16.00	6000	98	1347	-4.385	0	1660	-7.947	0	1760	-9.517	0	6	3	1
	20.00	6000	98	1530	-7.334	0	1859	-12.068	0	2106	-16.961	0	6	3	1
	25.00	6000	98	1562	-7.844	0	1890	-12.609	0	2148	-17.712	0	6	3	1
	28.00	6000	98	1456	-5.614	0	1765	-9.355	0	1865	-11.032	0	6	3	1
	35.00	6000	98	1662	-9.338	0	1987	-14.315	0	2266	-19.903	0	6	3	1
	40.00	6000	98	1532	-7.060	0	1803	-10.733	0	1911	-12.558	0	6	3	1
	49.00	6000	98	2051	-14.837	0	2556	-24.533	0	2744	-29.980	0	6	3	1
	70.00	6000	98	1951	-13.437	0	2459	-22.865	0	2639	-28.039	0	6	3	1
	100.00	6000	98	2327	-21.522	0	3156	-40.509	0	3278	-45.862	0	6	3	1

CMP.. n_e = 1500	i	M_{amax} [Nm]	M_{apk} [Nm]	$M_{aNotaus}$ [Nm]	n_{ak} [1/min]	J_{GA} 10^{-4} [kgm^2]	c_T PSF [Nm/']	F_{Ramax} PSF [N]	F_{Rapk} PSF [N]
PSF621 1	4.00	570	745	1110	1750	4.4	57	13400	13400
	5.00	595	700	1050	1400	2.9	56	13900	13500
	7.00	600	660	990	1000	1.5	50	13900	13700
	10.00	500	500	750	700	0.74	38	14200	14200
PSF622 2	16.00	600	745	1110	306	1.4	48	13900	13400
	20.00	600	700	1050	230	0.95	49	13900	13500
	25.00	600	700	1050	228	0.89	48	13900	13500
	28.00	600	745	1110	250	0.50	45	13900	13400
	35.00	600	700	1050	200	0.47	46	13900	13500
	40.00	600	745	1110	175	0.25	39	13900	13400
	49.00	600	660	990	143	0.44	43	13900	13700
	70.00	600	660	990	100	0.22	40	13900	13700
	100.00	500	500	750	70	0.21	33	14200	14200

57 034 00 06

PSF621..

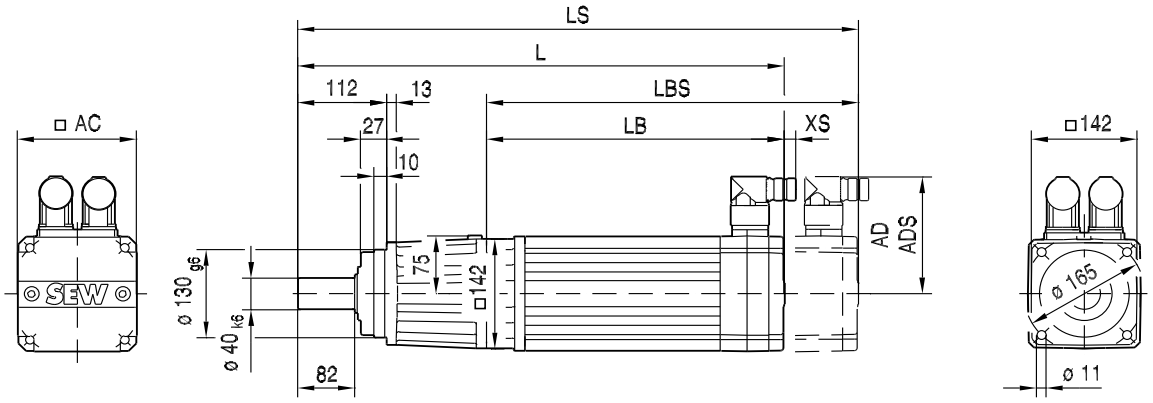

PSF

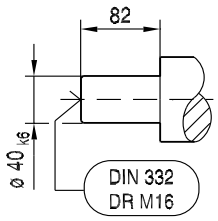

PSKF

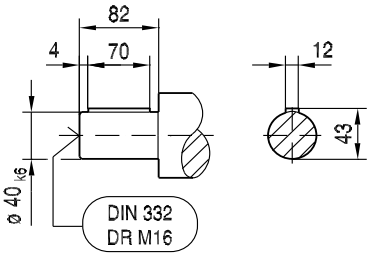

(→ 📖 144)	CMP63L	CMP71S	CMP71M	CMP71L	CMP80S	CMP80M	CMP80L	CMP100S	CMP100M	CMP100L
AC	88	115	115	115	137	137	137	162	162	162
AD	92	102	102	102	134	134	134	146	146	146
ADS	92	104	104	104	137	137	137	147	147	147
L	516	408	433	483	447	481	544	479	514	594
LS	545	473	498	548	525	559	622	575	610	690
LB	268	160	185	235	199	233	296	231	266	346
LBS	297	225	250	300	277	311	374	327	362	442
XS	14	11	11	11	37	37	37	37	37	37

57 035 00 06

PSF622..

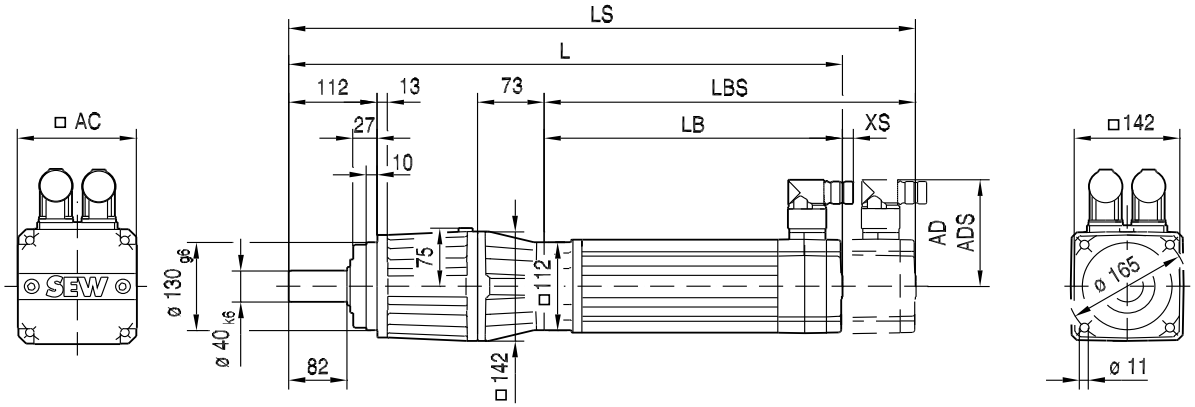

PSF

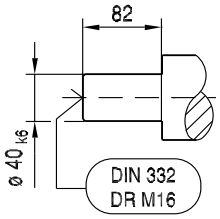

PSKF

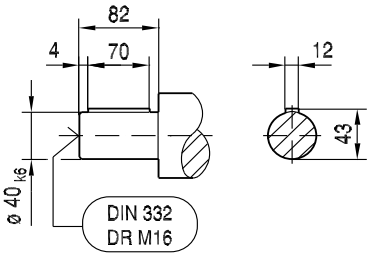

14

(→ 📖 144)	CMP50M	CMP50L	CMP63S	CMP63M	CMP63L	CMP71S	CMP71M	CMP71L	CMP80S	CMP80M	CMP80L
AC	73	73	88	88	88	115	115	115	137	137	137
AD	86	86	92	92	92	102	102	102	134	134	134
ADS	86	86	92	92	92	104	104	104	137	137	137
L	501	540	497	547	597	489	514	564	528	563	630
LS	530	569	526	576	626	554	579	629	606	641	708
LB	180	219	176	226	276	168	193	243	207	242	309
LBS	209	248	205	255	305	233	258	308	285	320	387
XS	18	18	14	14	14	11	11	11	37	37	37

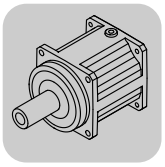

14.2.6 PS.F 721/722

M_{aDyn} [Nm]		CMP													
	i	50M	50L	63S	63M	63L	71S	71M	71L	80S	80M	80L	100S	100M	100L
PSF721 1	4.00											420		425	705
	5.00											525		530	880
	7.00									290	430	740	470	745	1230
	10.00									415	615	>1050	675	>1050	
PSF722 2	16.00				335	475	300	480	735	660	980	>1470			
	20.00				415	595	375	600	910	820	1220	>1540			
	25.00	250	375	270	520	740	470	750	1140	1030	1530	>1540			
	28.00	280	420	300	585	830	525	840	1280	1150	>1350				
	35.00	350	525	380	730	1040	655	1050	>1540	1440	>1540				
	40.00	400	600	435	830	>1080	750	>1080							
	49.00	490	735	530	1020	>1380	920	>1380	>1380	>1380	>1380				
	70.00	705	1050	760	>1380	>1380	1310	>1380							
	100.00	1000	>1050	>1050	>1050	>1050	>1050	>1050							

→ 📖 144

m [kg]		CMP													
	s	50M	50L	63S	63M	63L	71S	71M	71L	80S	80M	80L	100S	100M	100L
PSF721	1	32	33	33	35	36	37	39	41	45	48	52	53	57	65
PSF722	2	39	40	40	42	43	44	45	48	52	54	58	60	64	72

CMP..				M1;M3;M5-6			M2			M4			φ		
	i	n_{epk} [1/min]	η [%]	a_0	a_1	a_2	a_0	a_1	a_2	a_0	a_1	a_2	[']	/R [']	/M [']
PSF721 1	4.00	4500	99	2288	-3.437	0	2722	-5.815	0	3473	-11.679	0	4	2	1
	5.00	4500	99	2309	-3.570	0	2746	-5.951	0	3503	-11.878	0	4	2	1
	7.00	4500	99	2377	-4.171	0	2811	-6.427	0	3629	-12.643	0	4	2	1
	10.00	4500	99	2233	-4.553	0	2602	-6.455	0	3361	-12.221	0	4	2	1
PSF722 2	16.00	6000	98	2190	-6.493	0	2548	-10.764	0	2779	-14.201	0	6	3	1
	20.00	6000	98	2400	-8.185	0	2857	-14.191	0	3065	-17.745	0	6	3	1
	25.00	6000	98	2434	-8.643	0	2887	-14.651	0	3098	-18.278	0	6	3	1
	28.00	6000	98	2223	-7.521	0	2594	-11.891	0	2834	-15.477	0	6	3	1
	35.00	6000	98	2550	-10.050	0	3009	-16.379	0	3216	-20.048	0	6	3	1
	40.00	6000	98	2098	-8.216	0	2451	-12.365	0	2676	-15.787	0	6	3	1
	49.00	6000	98	2915	-14.944	0	3640	-26.147	0	3839	-30.340	0	6	3	1
	70.00	6000	98	3051	-18.629	0	3669	-29.409	0	3842	-33.476	0	6	3	1
	100.00	6000	98	3522	-29.556	0	4490	-49.846	0	4683	-54.900	0	6	3	1

CMP.. n_e = 1000	i	M_{amax} [Nm]	M_{apk} [Nm]	$M_{aNotaus}$ [Nm]	n_{ak} [1/min]	J_{GA} 10^{-4} [kgm^2]	c_T PSF [Nm/']	F_{Ramax} PSF [N]	F_{Rapk} PSF [N]
PSF721 1	4.00	1000	1550	2320	1750	13	146	25700	34800
	5.00	1000	1540	2310	1400	8.6	143	27500	34500
	7.00	1000	1380	2070	1000	4.5	125	30400	35000
	10.00	1000	1050	1570	700	2.2	91	33800	35800
PSF722 2	16.00	1000	1470	2200	181	2.0	104	36400	35100
	20.00	1000	1540	2310	345	1.3	109	35900	34500
	25.00	1000	1540	2310	280	1.1	106	35900	34500
	28.00	1000	1350	2020	168	0.68	90	36400	35500
	35.00	1000	1540	2310	200	0.58	95	35900	34500
	40.00	1000	1080	1620	140	0.33	71	36400	36200
	49.00	1000	1380	2070	143	0.50	93	35900	35000
	70.00	1000	1380	2070	100	0.25	80	35900	35000
	100.00	1000	1050	1570	70	0.22	69	35900	35800

57 036 00 06

PSF721..

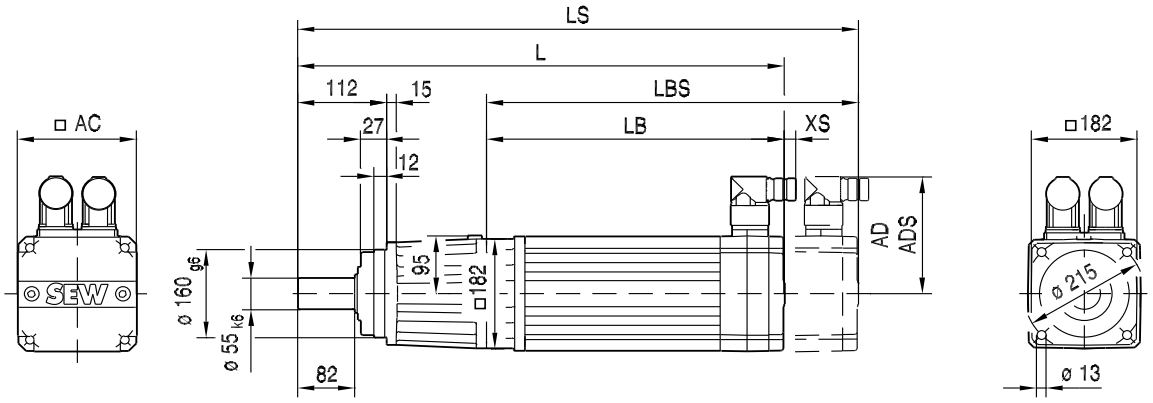

PSF

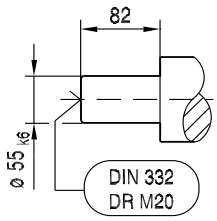

PSKF

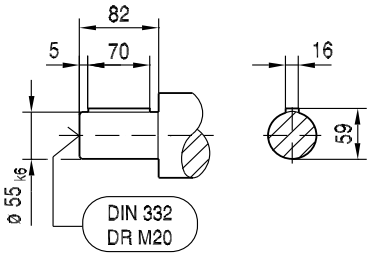

14

(→ 📖 144)	CMP80S	CMP80M	CMP80L	CMP100S	CMP100M	CMP100L		
AC	137	137	137	162	162	162		
AD	134	134	134	146	146	146		
ADS	137	137	137	147	147	147		
L	469	503	566	501	536	616		
LS	547	581	644	597	632	712		
LB	195	229	292	227	262	342		
LBS	273	307	370	323	358	438		
XS	37	37	37	37	37	37		

57 037 00 06

PSF722..

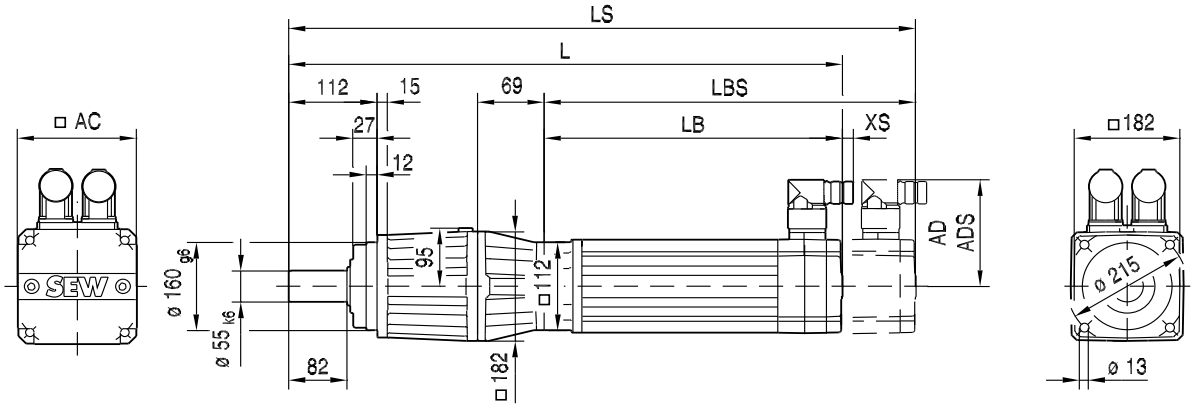

PSF

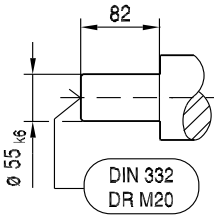

PSKF

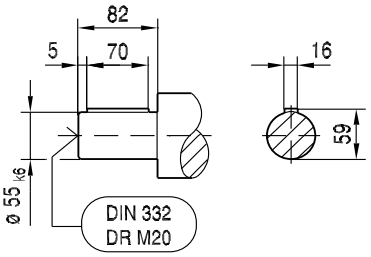

(→ 📖 144)	CMP50M	CMP50L	CMP63S	CMP63M	CMP63L	CMP71S	CMP71M	CMP71L	CMP80S	CMP80M	CMP80L
AC	73	73	88	88	88	115	115	115	137	137	137
AD	86	86	92	92	92	102	102	102	134	134	134
ADS	86	86	92	92	92	104	104	104	137	137	137
L	523	562	519	569	619	511	536	586	550	585	652
LS	552	591	548	598	648	576	601	651	628	663	730
LB	180	219	176	226	276	168	193	243	207	242	309
LBS	209	248	205	255	305	233	258	308	285	320	387
XS	18	18	14	14	14	11	11	11	37	37	37

14.2.7 PS.F 821/822

M_{aDyn} [Nm]		CMP									
	i	63L	71S	71M	71L	80S	80M	80L	100S	100M	100L
PSF822 2	16.00				735	660	980	1670	1070	1690	>2500
	20.00				910	820	1220	2090	1330	2110	>2500
	25.00	740		750	1140	1030	1530	>2500	1670	>2500	>2500
	28.00	830		840	1280	1150	1710	>2500	1870	>2500	
	35.00	1040		1050	1600	1440	2140	>2500	2340	>2500	
	40.00	1190	750	1200	1830	1650	>2000		>2000		
	49.00	1450		1470	2250	2020	>2740	>2740	>2740	>2740	
	70.00	2080	1310	2110	>2740	>2740	>2740		>2740		
	100.00	>2060	1880	>2060	>2060	>2060	>2060		>2060		

→ 144

m [kg]		CMP									
	s	63L	71S	71M	71L	80S	80M	80L	100S	100M	100L
PSF821	1	50	51	52	54	57	59	63	64	68	77
PSF822	2	63	64	66	68	71	73	77	78	82	91

CMP..				M1;M3;M5-6			M2			M4			φ		
	i	n_{epk} [1/min]	η [%]	a_0	a_1	a_2	a_0	a_1	a_2	a_0	a_1	a_2	[']	/R [']	/M [']
PSF822 2	16.00	6000	98	3871	-13.296	0	4541	-22.002	0	4968	-29.212	0	6	3	1
	20.00	6000	98	4406	-24.058	0	5007	-34.125	0	6113	-58.782	0	6	3	1
	25.00	6000	98	4478	-25.333	0	5074	-35.377	0	6180	-60.325	0	6	3	1
	28.00	6000	98	4113	-16.193	0	4784	-25.218	0	5227	-32.940	0	6	3	1
	35.00	6000	98	4703	-28.994	0	5302	-39.407	0	6432	-65.521	0	6	3	1
	40.00	6000	98	3947	-18.132	0	4586	-26.684	0	5043	-34.537	0	6	3	1
	49.00	6000	98	5602	-42.367	0	6553	-62.572	0	7505	-89.863	0	6	3	1
	70.00	6000	98	5901	-52.384	0	6737	-71.810	0	7681	-100.3	0	6	3	1
	100.00	6000	98	6600	-77.444	0	7873	-113.8	0	8521	-140.7	0	6	3	1

CMP.. n_e = 1000	i	M_{amax} [Nm]	M_{apk} [Nm]	$M_{aNotaus}$ [Nm]	n_{ak} [1/min]	J_{GA} 10^{-4} [kgm^2]	c_T PSF [Nm/']	F_{Ramax} PSF [N]	F_{Rapk} PSF [N]
PSF822 2	16.00	1750	2500	3750	225	7.1	298	51400	61700
	20.00	1750	2500	3750	265	4.6	314	54900	61700
	25.00	1750	2500	3750	268	3.9	302	58700	61700
	28.00	1750	2500	3750	161	2.4	254	60700	61700
	35.00	1750	2500	3750	200	2.0	270	62800	61700
	40.00	1750	2000	3000	168	1.2	183	62800	62500
	49.00	1750	2740	4110	143	1.7	278	62800	61200
	70.00	1750	2740	4110	100	0.84	223	62800	61200
	100.00	1750	2060	3090	70	0.75	207	62800	62400

57 049 00 06

PSF822..

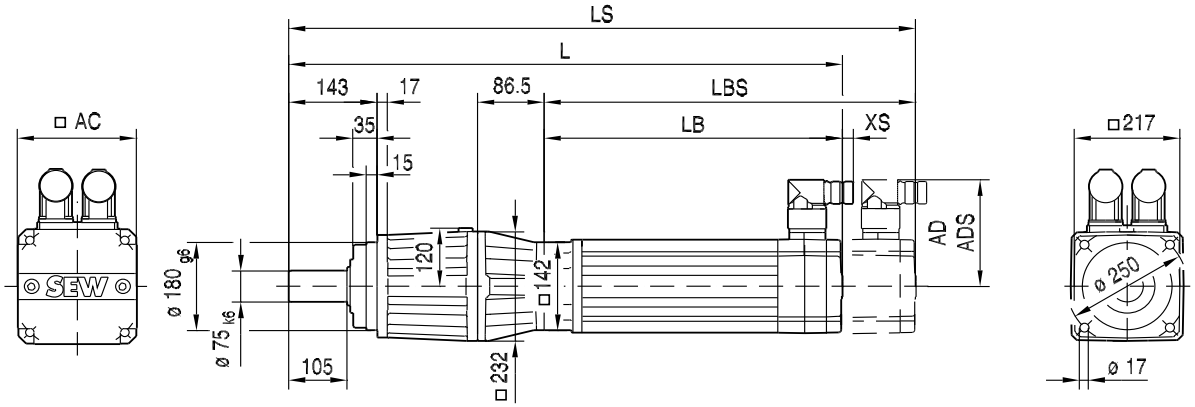

PSF

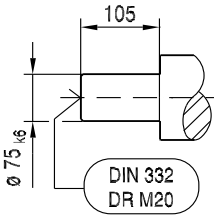

PSKF

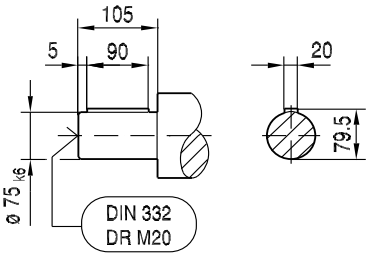

(→ 📖 144)	CMP63L	CMP71S	CMP71M	CMP71L	CMP80S	CMP80M	CMP80L	CMP100S	CMP100M	CMP100L
AC	88	115	115	115	137	137	137	162	162	162
AD	92	102	102	102	134	134	134	146	146	146
ADS	92	104	104	104	137	137	137	147	147	147
L	679	570	595	645	610	644	707	641	676	756
LS	707	635	660	710	687	721	784	737	772	852
LB	268	160	185	235	199	233	296	231	266	346
LBS	297	225	250	300	277	311	374	327	362	442
XS	14	11	11	11	37	37	37	37	37	37

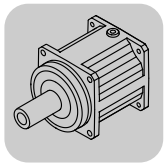

14.2.8 PS.F 921/922

M_{aDyn} [Nm]		CMP					
	i	80S	80M	80L	100S	100M	100L
PSF922 2	16.00			1670		1690	2800
	20.00			2090		2110	3500
	25.00			2620		2640	>4200
	28.00	1150	1710	2930	1870	2960	>4200
	35.00	1440	2140	3670	2340	3700	>4200
	40.00	1650	2450	4190	2670	>4200	
	49.00	2020	3000	>3310	3270	>3310	>3310
	70.00	2880	>4200	>4200	>4200	>4200	
	100.00	>3230	>3230	>3230	>3230	>3230	

→ 144

m [kg]		CMP					
	s	80S	80M	80L	100S	100M	100L
PSF921	1	73	75	79	80	85	93
PSF922	2	93	96	100	100	105	115

CMP..				M1;M3;M5-6			M2			M4			φ		
	i	n_{epk} [1/min]	η [%]	a_0	a_1	a_2	a_0	a_1	a_2	a_0	a_1	a_2	[']	/R [']	/M [']
PSF922 2	16.00	4500	98	6739	-32.288	0	7810	-50.952	0	8299	-61.476	0	6	3	1
	20.00	4500	98	6947	-34.756	0	8395	-61.188	0	8826	-71.640	0	6	3	1
	25.00	4500	98	7003	-35.696	0	8459	-62.307	0	8897	-72.954	0	6	3	1
	28.00	4500	98	6981	-35.629	0	8094	-55.208	0	8595	-66.164	0	6	3	1
	35.00	4500	98	7239	-39.178	0	8731	-66.919	0	9199	-78.275	0	6	3	1
	40.00	4500	98	6912	-38.324	0	7971	-57.478	0	8456	-68.332	0	6	3	1
	49.00	4500	98	7925	-52.774	0	10351	-102.7	0	10602	-112.9	0	6	3	1
	70.00	4500	98	8606	-64.942	0	10715	-114.0	0	11060	-126.1	0	6	3	1
	100.00	4500	98	9818	-100.2	0	12834	-187.9	0	12892	-197.4	0	6	3	1

CMP.. n_e = 1000	i	M_{amax} [Nm]	M_{apk} [Nm]	$M_{aNotaus}$ [Nm]	n_{ak} [1/min]	J_{GA} 10^{-4} [kgm^2]	c_T PSF [Nm/']	F_{Ramax} PSF [N]	F_{Rapk} PSF [N]
PSF922 2	16.00	3000	4200	6300	250	17	398	55000	81600
	20.00	3000	4200	6300	250	11	420	58800	81600
	25.00	3000	4200	6300	248	9.5	417	62800	81600
	28.00	3000	4200	6300	250	5.7	368	65000	81600
	35.00	3000	4200	6300	200	5.0	389	69500	81600
	40.00	3000	4200	6300	175	2.8	289	72300	81600
	49.00	3000	3310	4960	143	4.4	400	76900	82900
	70.00	3000	4200	6300	100	2.2	341	83300	81600
	100.00	3000	3230	4840	70	2.0	317	83300	83000

57 050 00 06

PSF922..

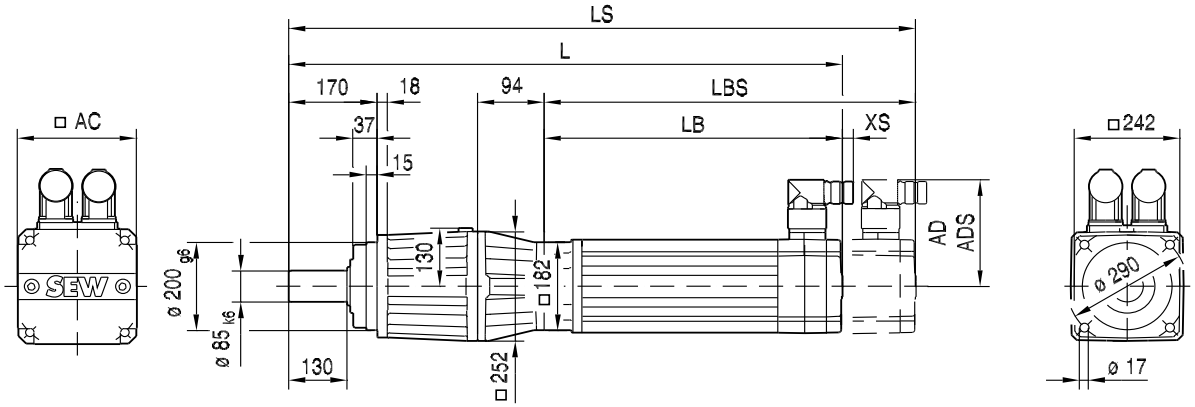

PSF

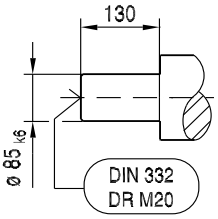

PSKF

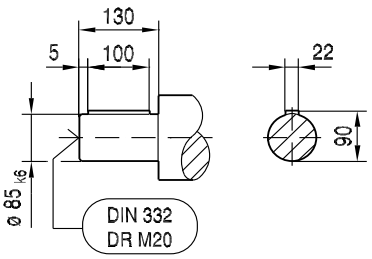

(→ 📖 144)	CMP80S	CMP80M	CMP80L	CMP100S	CMP100M	CMP100L		
AC	137	137	137	162	162	162		
AD	134	134	134	146	146	146		
ADS	137	137	137	147	147	147		
L	660	694	757	692	727	807		
LS	738	772	835	788	823	903		
LB	195	229	292	227	262	342		
LBS	273	307	370	323	358	438		
XS	37	37	37	37	37	37		

14.3 PSBF.. [mm]

14.3.1 PSBF 221/222

M_{aDyn} [Nm]		CMP					
	i	40M	50S	50M	50L	63S	63M
PSBF221 1	5.00		26	51	76	55	>80
	7.00		36	71	>85	77	>85
	10.00		51				
PSBF222 2	20.00	74	>80	>80	>80		
	25.00	>80	>80	>80	>80		
	35.00	>80	>80				
	49.00	>85	>85				
	70.00	>85					
	100.00	>62					

→ 144

m [kg]		CMP					
	s	40M	50S	50M	50L	63S	63M
PSBF221	1	3.0	3.8	4.7	5.6	6.1	7.6
PSBF222	2	3.6	4.4	5.3	6.2	6.6	8.2

CMP..				M1;M3;M5-6			M2			M4			φ		
	i	n_{epk} [1/min]	η [%]	a_0	a_1	a_2	a_0	a_1	a_2	a_0	a_1	a_2	[']	/R [']	/M [']
PSBF221 1	5.00	7500	99	153.0	-0.142	0	179.0	-0.218	0	179.0	-0.264	0	6	3	1
	7.00	7500	99	169.0	-0.177	0	196.0	-0.260	0	202	-0.325	0	6	3	1
	10.00	7500	99	158.0	-0.197	0	183.0	-0.276	0	201	-0.377	0	6	3	1
PSBF222 2	20.00	8000	98	210	-0.591	0	274	-1.092	0	287	-1.220	0	8	4	2
	25.00	8000	98	219	-0.675	0	281	-1.180	0	294	-1.312	0	8	4	2
	35.00	8000	98	245	-0.908	0	302	-1.441	0	315	-1.583	0	8	4	2
	49.00	8000	98	320	-1.613	0	403	-2.620	0	415	-2.796	0	8	4	2
	70.00	8000	98	363	-2.362	0	432	-3.370	0	442	-3.550	0	8	4	2
	100.00	8000	98	461	-4.232	0	560	-6.162	0	570	-6.394	0	8	4	2

CMP.. n_e = 1500	i	M_{amax} [Nm]	M_{apk} [Nm]	$M_{aNotaus}$ [Nm]	n_{ak} [1/min]	J_{GA} 10^{-4} [kgm²]	c_T PSBF [Nm/']	F_{Ramax} PSBF [N]	F_{Rapk} PSBF [N]
PSBF221 1	5.00	55	80	120	1400	0.10	16	1530	5000
	7.00	55	85	128	1000	0.054	14	1720	5000
	10.00	55	62	93	700	0.026	7.3	1930	5000
PSBF222 2	20.00	55	80	120	350	0.041	10	2430	5000
	25.00	55	80	120	280	0.027	9.8	2620	5000
	35.00	55	80	120	200	0.014	9.0	2930	5000
	49.00	55	85	128	143	0.013	9.1	3280	5000
	70.00	55	85	128	100	0.006	7.7	3700	5000
	100.00	55	62	93	70	0.006	5.3	4160	5000

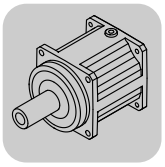

57 038 01 06

PSBF221..

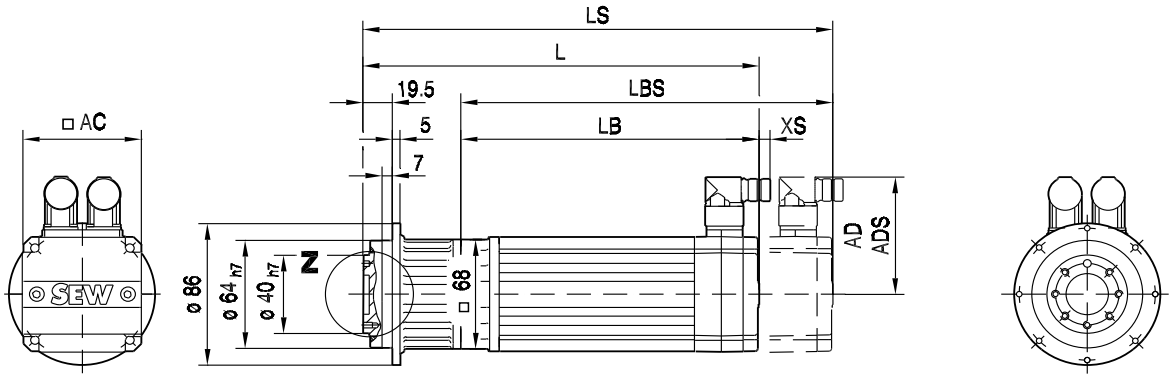

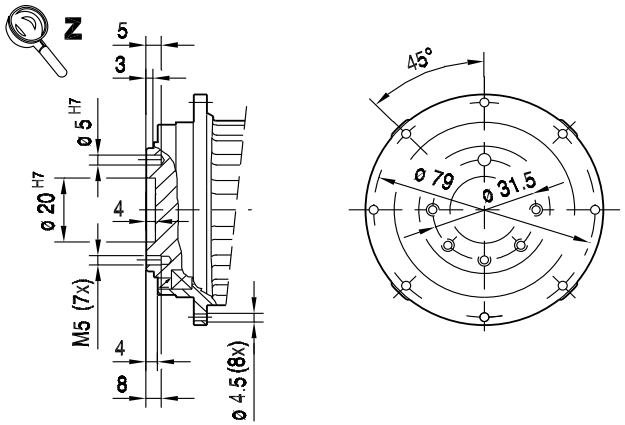

(→ 📖 144)	CMP50S	CMP50M	CMP50L	CMP63S	CMP63M			
AC	73	73	73	88	88			
AD	86	86	86	92	92			
ADS	86	86	86	92	92			
L	211	250	289	246	296			
LS	240	279	318	274	324			
LB	151	190	229	186	236			
LBS	180	219	258	215	265			
XS	18	18	18	14	14			

57 039 01 06

PSBF222..

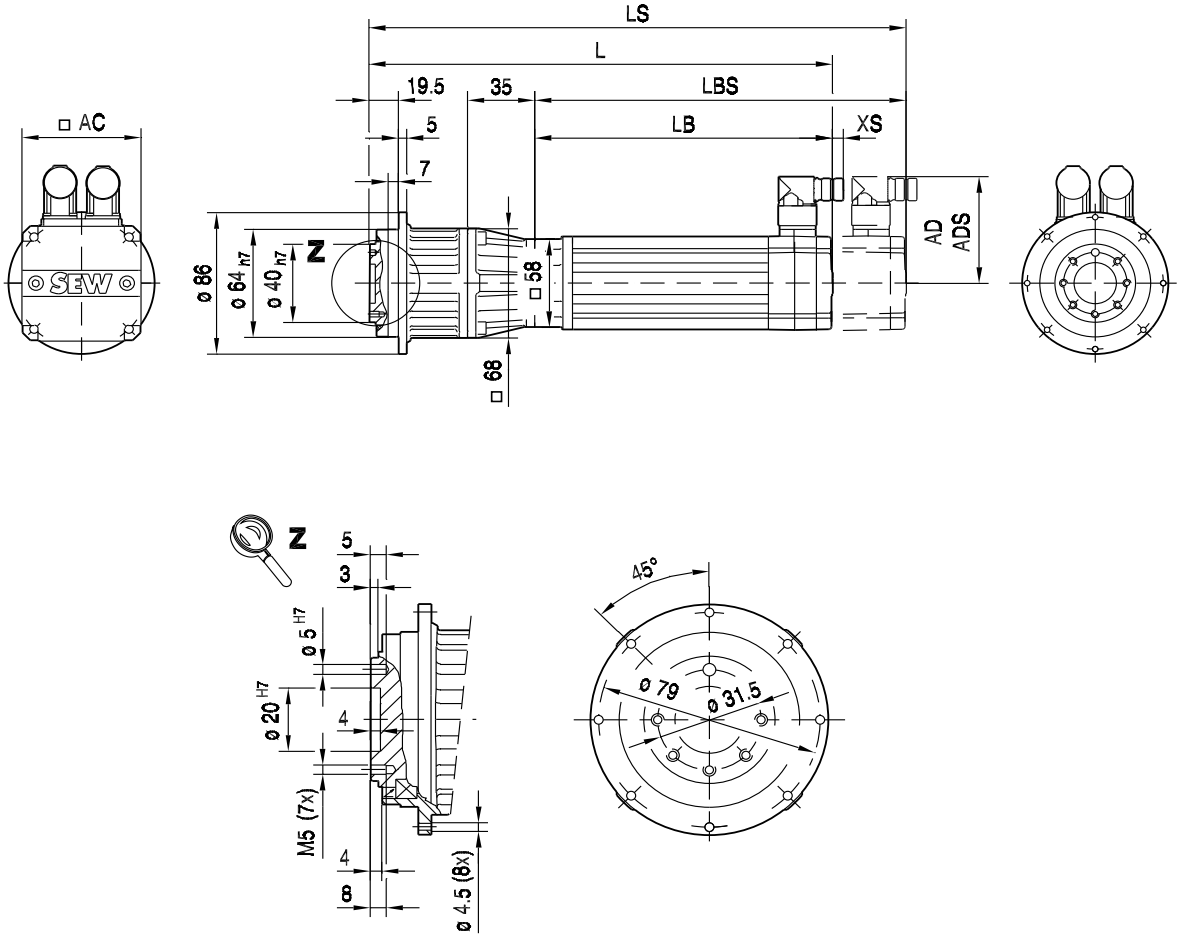

(→ 144)	CMP40M	CMP50S	CMP50M	CMP50L				
AC	57	73	73	73				
AD	78	86	86	86				
ADS	78	86	86	86				
L	250	252	291	330				
LS	280	281	320	359				
LB	156	157	196	235				
LBS	186	186	225	264				
XS	19	18	18	18				

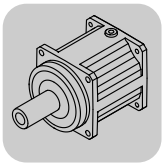

14.3.2 PSBF 321/322

M_{aDyn} [Nm]		CMP							
	i	50S	50M	50L	63S	63M	63L	71S	71M
PSBF321 1	5.00	26	51	76	55	106	150	95	152
	7.00	36	71	107	77	148	>168	133	>168
	10.00	51	102	>121	110				
PSBF322 2	15.00	76	151	>169	163	>169			
	20.00	102	>169	>169	>169	>169			
	25.00	127	>169	>169	>169	>169			
	35.00	>169	>169	>169	>169	>169			
	49.00	>168	>168	>168	>168	>168			
	70.00	>168							
	100.00	>121							

→ 📖 144

m [kg]		CMP							
	s	50S	50M	50L	63S	63M	63L	71S	71M
PSBF321	1	6.7	7.6	8.5	8.0	9.5	11	12	13
PSBF322	2	8.2	9.1	10.0	9.5	11	12	14	15

CMP..				M1;M3;M5-6			M2			M4			φ		
	i	n_{epk} [1/min]	η [%]	a_0	a_1	a_2	a_0	a_1	a_2	a_0	a_1	a_2	[']	/R [']	/M [']
PSBF321 1	5.00	7000	99	290	-0.355	0	328	-0.501	0	414	-0.930	0	6	3	1
	7.00	7000	99	296	-0.418	0	335	-0.581	0	422	-1.036	0	6	3	1
	10.00	7000	99	269	-0.477	0	302	-0.617	0	374	-1.016	0	6	3	1
PSBF322 2	15.00	7500	98	365	-1.076	0	452	-1.831	0	517	-2.590	0	8	4	2
	20.00	7500	98	366	-0.987	0	479	-1.946	0	508	-2.259	0	8	4	2
	25.00	7500	98	372	-1.053	0	522	-2.195	0	512	-2.336	0	8	4	2
	35.00	7500	98	396	-1.263	0	505	-2.272	0	534	-2.609	0	8	4	2
	49.00	7500	98	467	-1.995	0	616	-3.752	0	641	-4.128	0	8	4	2
	70.00	7500	98	502	-2.580	0	633	-4.341	0	657	-4.724	0	8	4	2
	100.00	7500	98	577	-4.137	0	756	-7.260	0	776	-7.704	0	8	4	2

CMP.. n_e = 1500	i	M_{amax} [Nm]	M_{apk} [Nm]	$M_{aNotaus}$ [Nm]	n_{ak} [1/min]	J_{GA} 10^{-4} [kgm^2]	c_T PSBF [Nm/']	F_{Ramax} PSBF [N]	F_{Rapk} PSBF [N]
PSBF321 1	5.00	110	169	250	1400	0.51	39	8580	25000
	7.00	110	168	250	1000	0.27	29	9500	25000
	10.00	110	121	182	700	0.13	14	10600	25000
PSBF322 2	15.00	110	169	250	453	0.26	20	11900	25000
	20.00	110	169	250	350	0.14	21	13000	25000
	25.00	110	169	250	280	0.088	21	13900	25000
	35.00	110	169	250	200	0.047	20	15400	25000
	49.00	110	168	250	143	0.042	18	17000	25000
	70.00	110	168	250	100	0.020	16	18900	25000
	100.00	110	121	182	70	0.019	11	21100	25000

57 040 01 06

PSBF321..

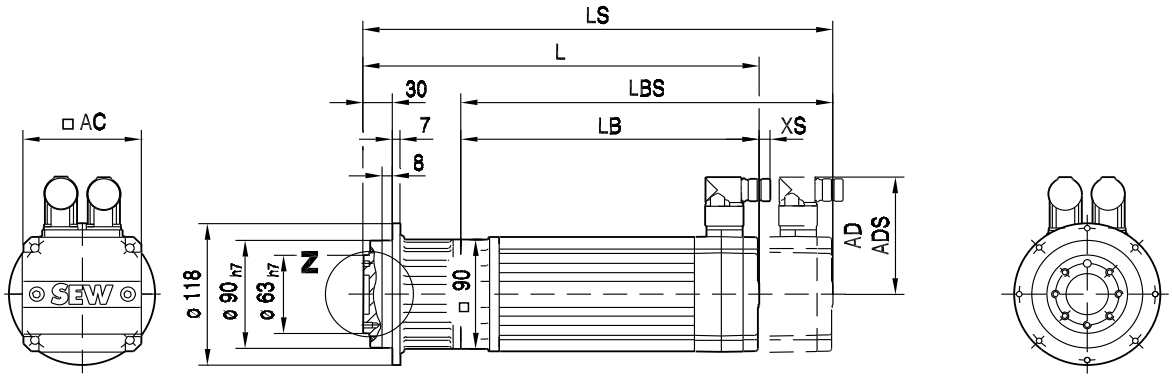

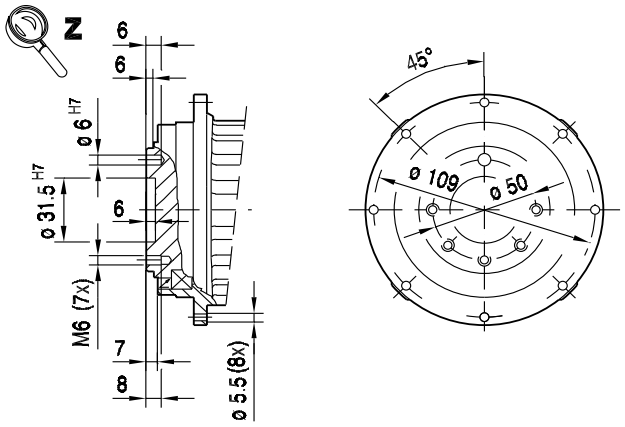

(→ 📖 144)	CMP50S	CMP50M	CMP50L	CMP63S	CMP63M	CMP63L	CMP71S	CMP71M
AC	73	73	73	88	88	88	115	115
AD	86	86	86	92	92	92	102	102
ADS	86	86	86	92	92	92	104	104
L	229	268	307	264	314	364	256	281
LS	258	297	336	293	343	393	321	346
LB	146	185	224	181	231	281	173	198
LBS	175	214	253	210	260	310	238	263
XS	18	18	18	14	14	14	11	11

57 041 01 06

PSBF322..

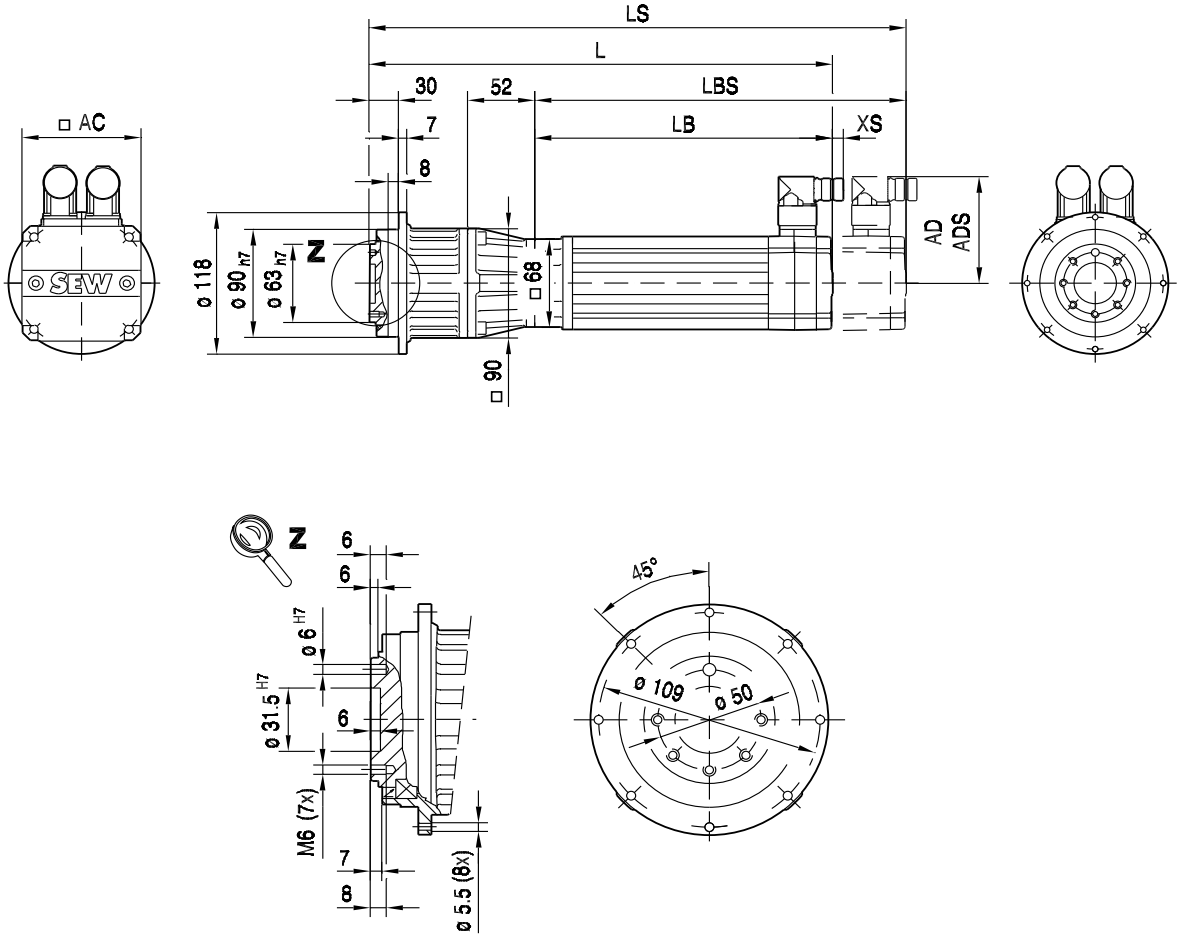

(→ 144)	CMP50S	CMP50M	CMP50L	CMP63S	CMP63M			
AC	73	73	73	88	88			
AD	86	86	86	92	92			
ADS	86	86	86	92	92			
L	286	325	364	321	371			
LS	315	354	393	350	400			
LB	151	190	229	186	236			
LBS	180	219	258	215	265			
XS	18	18	18	14	14			

14.3.3 PSBF 521/522

M_{aDyn} [Nm]		CMP											
	i	50S	50M	50L	63S	63M	63L	71S	71M	71L	80S	80M	80L
PSBF521	5.00		51	76	55	106	150	95	152	230	205	305	>375
1	7.00		71	107	77	148	210	133	210	325	290	>360	
	10.00		102	152	110	210	>270	190	>270				
	15.00		151	225	163	310	>375	280	>375				
	20.00	102	200	300	215	>375	>375	>375	>375				
PSBF522	25.00	127	250	>375	270	>375	>375	>375	>375				
2	35.00	178	350	>375	>375	>375	>375	>375	>375				
	49.00	245	>360	>360	>360	>360	>360	>360	>360				
	70.00	355	>360	>360	>360								
	100.00	>270	>270	>270	>270								

→ 144

m [kg]		CMP											
	s	50S	50M	50L	63S	63M	63L	71S	71M	71L	80S	80M	80L
PSBF521	1	8.8	9.7	11	10	12	13	15	16	18	21	23	27
PSBF522	2	12	12	13	13	15	16	17	19	21	24	26	30

CMP..				M1;M3;M5-6			M2			M4			φ		
	i	n_{epk} [1/min]	η [%]	a_0	a_1	a_2	a_0	a_1	a_2	a_0	a_1	a_2	[']	/R [']	/M [']
PSBF521	5.00	6000	99	633	-0.860	0	747	-1.345	0	964	-2.554	0	6	3	1
1	7.00	6000	99	670	-1.029	0	805	-1.596	0	1024	-2.855	0	6	3	1
	10.00	6000	99	651	-1.253	0	752	-1.709	0	937	-2.831	0	6	3	1
	15.00	7000	98	735	-2.616	0	885	-4.256	0	989	-5.851	0	8	4	2
	20.00	7000	98	751	-2.385	0	981	-4.855	0	1107	-6.734	0	8	4	2
PSBF522	25.00	7000	98	781	-2.642	0	1012	-5.183	0	1142	-7.143	0	8	4	2
2	35.00	7000	98	870	-3.860	0	1027	-5.742	0	1150	-7.701	0	8	4	2
	49.00	7000	98	1064	-6.079	0	1323	-9.798	0	1445	-12.110	0	8	4	2
	70.00	7000	98	1122	-7.805	0	1331	-11.307	0	1424	-13.427	0	8	4	2
	100.00	7000	98	1077	-6.893	0	1467	-13.340	0	1576	-15.732	0	8	4	2

CMP.. n_e = 1500	i	M_{amax} [Nm]	M_{apk} [Nm]	$M_{aNotaus}$ [Nm]	n_{ak} [1/min]	J_{GA} 10^{-4} [kgm^2]	c_T PSBF [Nm/']	F_{Ramax} PSBF [N]	F_{Rapk} PSBF [N]
PSBF521	5.00	300	375	560	1400	1.3	118	13900	40000
1	7.00	300	360	540	1000	0.68	72	15400	40000
	10.00	270	270	405	700	0.34	37	17200	40000
	15.00	300	375	560	407	0.75	58	19400	40000
	20.00	300	375	560	350	0.37	58	21100	40000
PSBF522	25.00	300	375	560	280	0.24	58	22600	40000
2	35.00	300	375	560	200	0.13	52	25000	40000
	49.00	300	360	540	143	0.12	45	27600	40000
	70.00	300	360	540	100	0.057	37	30800	40000
	100.00	270	270	405	70	0.054	27	34200	40000

57 042 01 06

PSBF521..

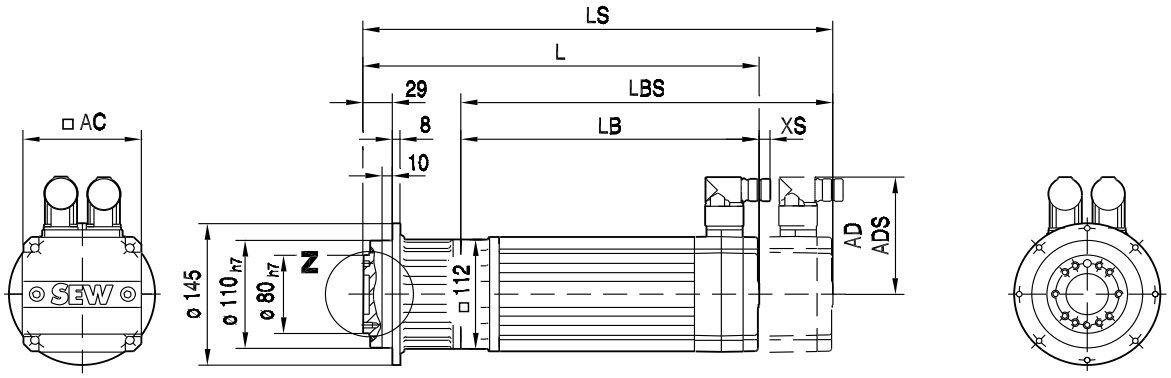

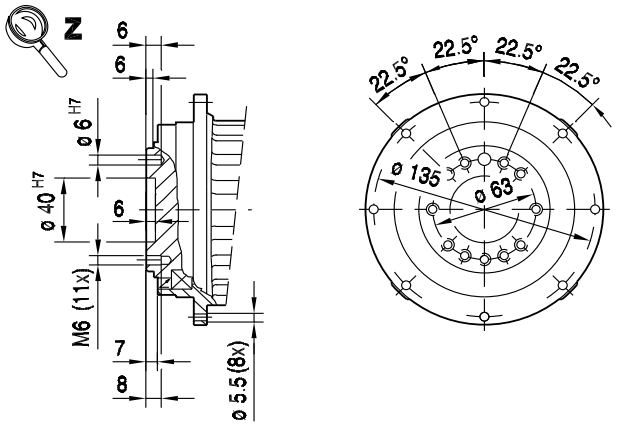

(→ 144)	CMP50M	CMP50L	CMP63S	CMP63M	CMP63L	CMP71S	CMP71M	CMP71L	CMP80S	CMP80M	CMP80L
AC	73	73	88	88	88	115	115	115	137	137	137
AD	86	86	92	92	92	102	102	102	134	134	134
ADS	86	86	92	92	92	104	104	104	137	137	137
L	279	318	275	325	375	266	291	341	306	341	408
LS	308	347	303	353	403	331	356	406	383	418	485
LB	180	219	176	226	276	168	193	243	207	242	309
LBS	209	248	205	255	305	233	258	308	285	320	387
XS	18	18	14	14	14	11	11	11	37	37	37

57 043 01 06

PSBF522..

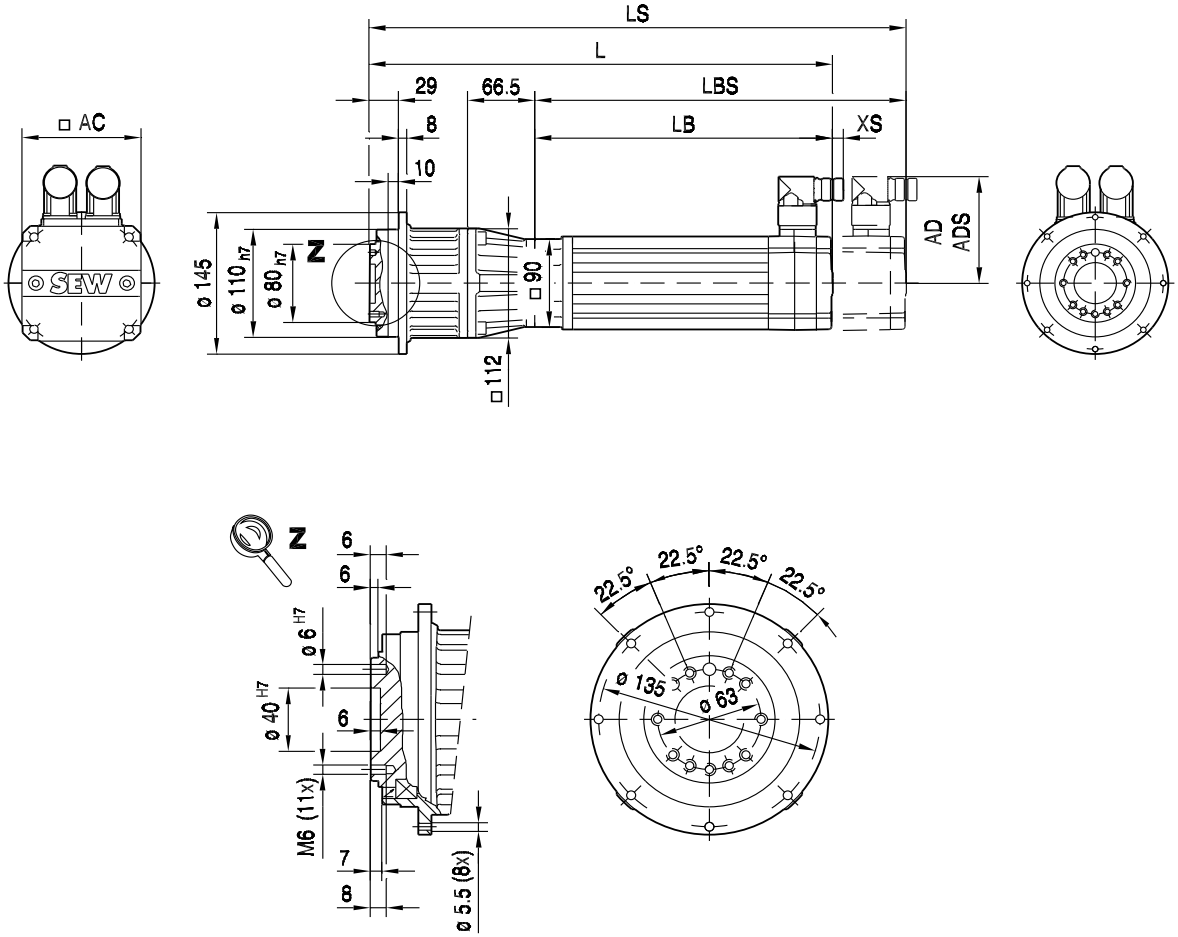

(→ 144)	CMP50S	CMP50M	CMP50L	CMP63S	CMP63M	CMP63L	CMP71S	CMP71M
AC	73	73	73	88	88	88	115	115
AD	86	86	86	92	92	92	102	102
ADS	86	86	86	92	92	92	104	104
L	311	350	389	346	396	446	338	363
LS	340	379	418	375	425	475	403	428
LB	146	185	224	181	231	281	173	198
LBS	175	214	253	210	260	310	238	263
XS	18	18	18	14	14	14	11	11

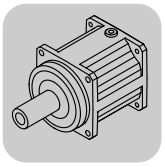

14.3.4 PSBF 621/622

M_{aDyn} [Nm]		CMP													
	i	50M	50L	63S	63M	63L	71S	71M	71L	80S	80M	80L	100S	100M	100L
PSBF621 1	5.00					150		152	230	205	305	525	335	530	>700
	7.00					210		210	325	290	430	>660	470	>660	
	10.00					300	190	300	460	415	>500		>500		
PSBF622 2	20.00				415	595	375	600	>700	>700	>700	>700			
	25.00	250	375	270	520	>700	470	>700	>700	>700	>700	>700			
	35.00	350	525	380	>700	>700	655	>700	>700	>700	>700				
	49.00	490	>660	530	>660	>660	>660	>660	>660	>660	>660				
	70.00	>660	>660	>660	>660	>660	>660	>660							
	100.00	>500	>500	>500	>500	>500	>500	>500							

→ 📖 144

m [kg]		CMP													
	s	50M	50L	63S	63M	63L	71S	71M	71L	80S	80M	80L	100S	100M	100L
PSBF621	1	14	15	15	16	18	20	21	23	26	28	32	33	37	46
PSBF622	2	19	20	20	22	24	25	26	29	31	33	37	38	42	51

CMP..				M1;M3;M5-6			M2			M4			φ		
	i	n_{epk} [1/min]	η [%]	a_0	a_1	a_2	a_0	a_1	a_2	a_0	a_1	a_2	[']	/R [']	/M [']
PSBF621 1	5.00	6000	99	1176	-1.751	0	1402	-2.761	0	1836	-5.516	0	4	2	1
	7.00	6000	99	1290	-2.268	0	1505	-3.257	0	1948	-6.140	0	4	2	1
	10.00	6000	99	1059	-1.739	0	1306	-2.710	0	1764	-5.445	0	4	2	1
PSBF622 2	20.00	6000	98	1530	-7.334	0	1859	-12.068	0	2106	-16.961	0	6	3	1
	25.00	6000	98	1562	-7.844	0	1890	-12.609	0	2148	-17.712	0	6	3	1
	35.00	6000	98	1662	-9.338	0	1987	-14.315	0	2266	-19.903	0	6	3	1
	49.00	6000	98	2051	-14.837	0	2556	-24.533	0	2744	-29.980	0	6	3	1
	70.00	6000	98	1951	-13.437	0	2459	-22.865	0	2639	-28.039	0	6	3	1
	100.00	6000	98	2327	-21.522	0	3156	-40.509	0	3278	-45.862	0	6	3	1

CMP.. n_e = 1500	i	M_{amax} [Nm]	M_{apk} [Nm]	$M_{aNotaus}$ [Nm]	n_{ak} [1/min]	J_{GA} 10^{-4} [kgm^2]	c_T PSBF [Nm/']	F_{Ramax} PSBF [N]	F_{Rapk} PSBF [N]
PSBF621 1	5.00	595	700	1050	1400	4.3	288	20800	60000
	7.00	600	660	990	1000	2.2	183	23000	60000
	10.00	500	500	750	700	1.1	85	25500	60000
PSBF622 2	20.00	600	700	1050	230	1.4	161	31500	60000
	25.00	600	700	1050	228	0.94	156	33600	60000
	35.00	600	700	1050	200	0.49	133	37200	60000
	49.00	600	660	990	143	0.45	115	41200	60000
	70.00	600	660	990	100	0.22	95	45800	60000
	100.00	500	500	750	70	0.21	63	51000	60000

57 044 01 06

PSBF621..

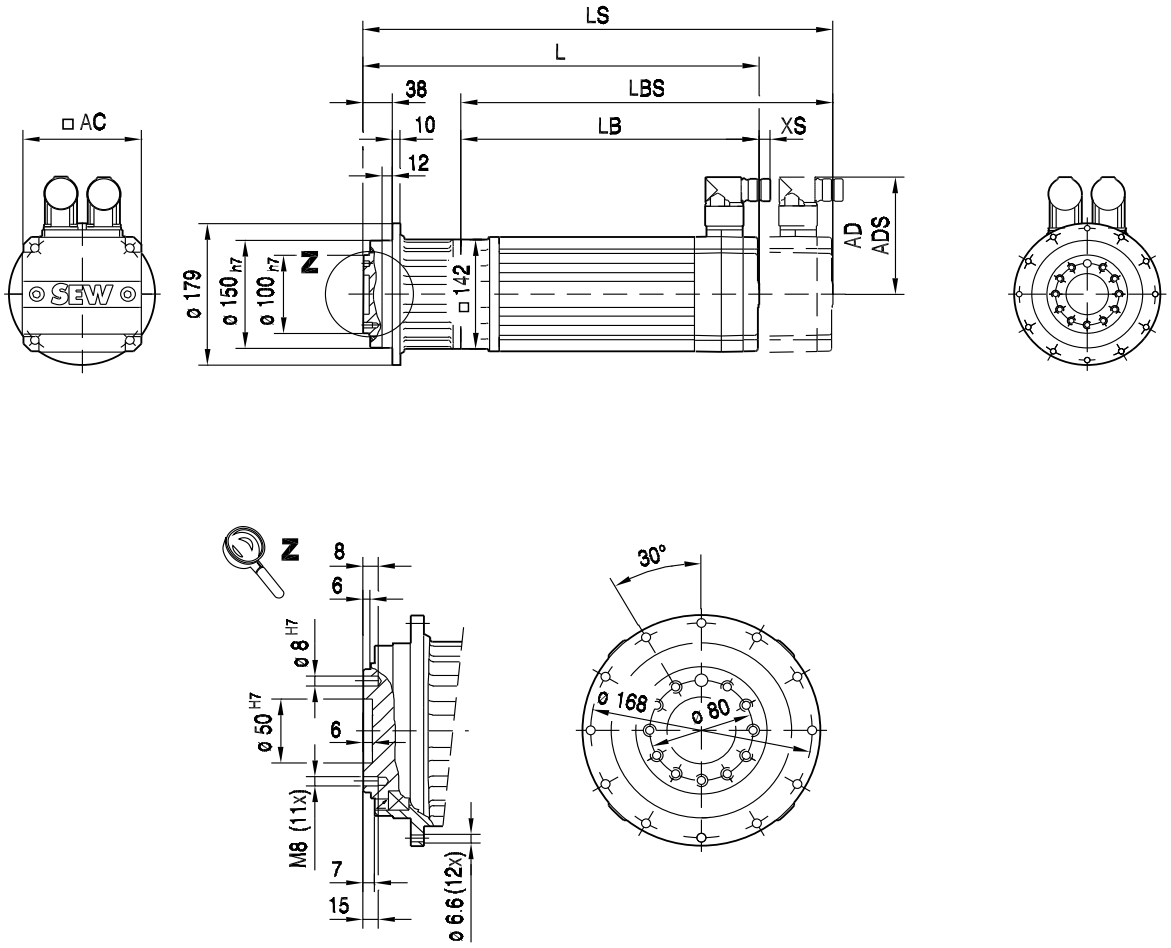

(→ 📖 144)	CMP63L	CMP71S	CMP71M	CMP71L	CMP80S	CMP80M	CMP80L	CMP100S	CMP100M	CMP100L
AC	88	115	115	115	137	137	137	162	162	162
AD	92	102	102	102	134	134	134	146	146	146
ADS	92	104	104	104	137	137	137	147	147	147
L	387	279	304	354	318	352	415	350	385	465
LS	416	344	369	419	396	430	493	446	481	561
LB	268	160	185	235	199	233	296	231	266	346
LBS	297	225	250	300	277	311	374	327	362	442
XS	14	11	11	11	37	37	37	37	37	37

57 045 01 06

PSBF622..

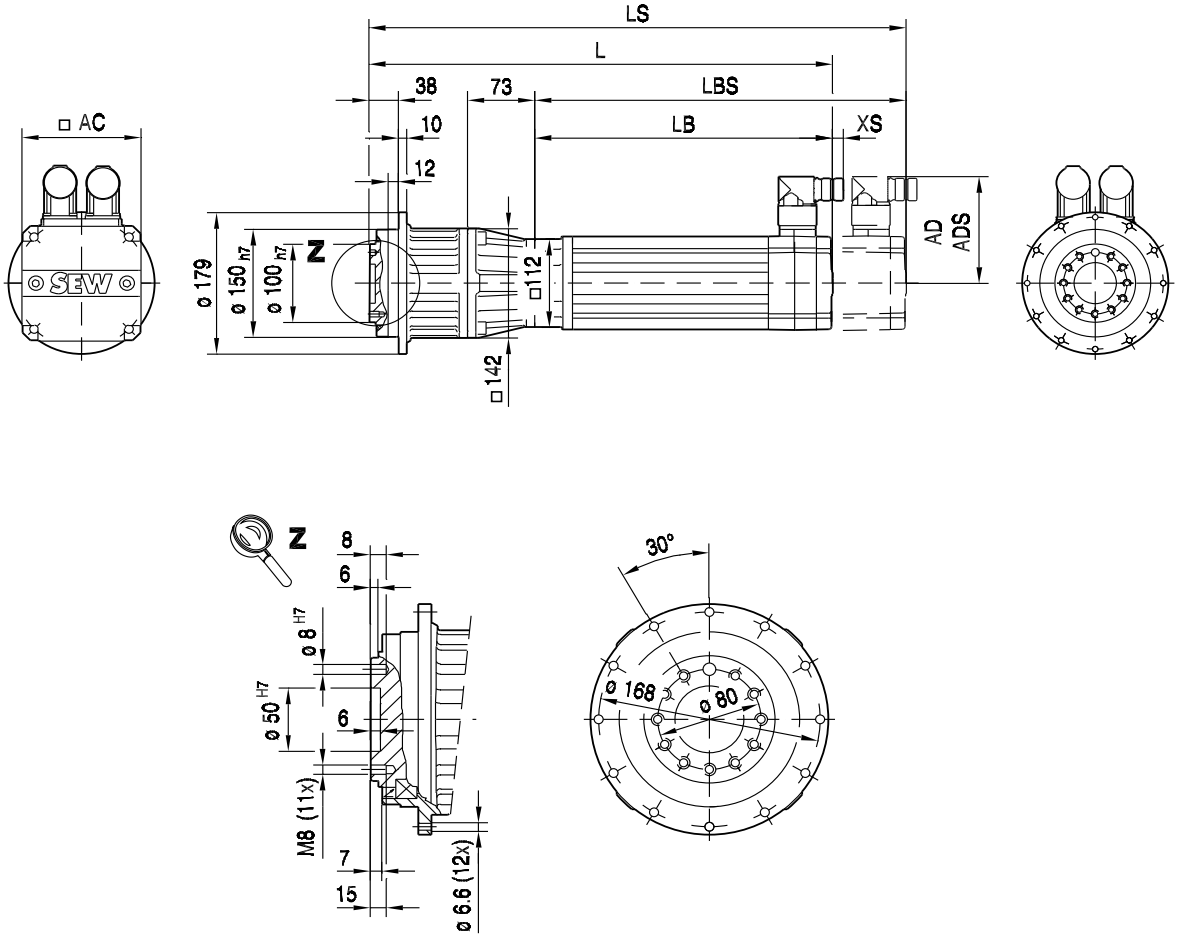

(→ 144)	CMP50M	CMP50L	CMP63S	CMP63M	CMP63L	CMP71S	CMP71M	CMP71L	CMP80S	CMP80M	CMP80L
AC	73	73	88	88	88	115	115	115	137	137	137
AD	86	86	92	92	92	102	102	102	134	134	134
ADS	86	86	92	92	92	104	104	104	137	137	137
L	372	411	368	418	468	360	385	435	399	434	501
LS	401	440	397	447	497	425	450	500	477	512	579
LB	180	219	176	226	276	168	193	243	207	242	309
LBS	209	248	205	255	305	233	258	308	285	320	387
XS	18	18	14	14	14	11	11	11	37	37	37

14.3.5 PSBF 721/722

M_{aDyn} [Nm]		CMP													
	i	50M	50L	63S	63M	63L	71S	71M	71L	80S	80M	80L	100S	100M	100L
PSBF721 1	5.00											525		530	880
	7.00									290	430	740	470	745	1230
	10.00									415	615	>1050	675	>1050	
PSBF722 2	20.00				415	595	375	600	910	820	1220	>1540			
	25.00	250	375	270	520	740	470	750	1140	1030	1530	>1540			
	35.00	350	525	380	730	1040	655	1050	>1540	1440	>1540				
	49.00	490	735	530	1020	>1380	920	>1380	>1380	>1380	>1380				
	70.00	705	1050	760	>1380	>1380	1310	>1380							
	100.00	1000	>1050	>1050	>1050	>1050	>1050	>1050							

→ 144

m [kg]		CMP													
	s	50M	50L	63S	63M	63L	71S	71M	71L	80S	80M	80L	100S	100M	100L
PSBF721	1	29	30	31	32	34	35	36	38	43	45	49	50	54	63
PSBF722	2	36	37	37	39	40	41	43	45	49	52	56	57	61	69

CMP..				M1;M3;M5-6			M2			M4			φ		
	i	n_{epk} [1/min]	η [%]	a_0	a_1	a_2	a_0	a_1	a_2	a_0	a_1	a_2	[']	/R [']	/M [']
PSBF721 1	5.00	4500	99	2309	-3.570	0	2746	-5.951	0	3503	-11.878	0	4	2	1
	7.00	4500	99	2377	-4.171	0	2811	-6.427	0	3629	-12.643	0	4	2	1
	10.00	4500	99	2233	-4.553	0	2602	-6.455	0	3361	-12.221	0	4	2	1
PSBF722 2	20.00	6000	98	2400	-8.185	0	2857	-14.191	0	3065	-17.745	0	6	3	1
	25.00	6000	98	2434	-8.643	0	2887	-14.651	0	3098	-18.278	0	6	3	1
	35.00	6000	98	2550	-10.050	0	3009	-16.379	0	3216	-20.048	0	6	3	1
	49.00	6000	98	2915	-14.944	0	3640	-26.147	0	3839	-30.340	0	6	3	1
	70.00	6000	98	3051	-18.629	0	3669	-29.409	0	3842	-33.476	0	6	3	1
	100.00	6000	98	3522	-29.556	0	4490	-49.846	0	4683	-54.900	0	6	3	1

CMP.. n_e = 1000	i	M_{amax} [Nm]	M_{apk} [Nm]	$M_{aNotaus}$ [Nm]	n_{ak} [1/min]	J_{GA} 10^{-4} [kgm^2]	c_T PSBF [Nm/']	F_{Ramax} PSBF [N]	F_{Rapk} PSBF [N]
PSBF721 1	5.00	1000	1540	2310	1400	26	538	37900	120000
	7.00	1000	1380	2070	1000	13	398	41900	120000
	10.00	1000	1050	1570	700	6.6	197	46600	120000
PSBF722 2	20.00	1000	1540	2310	345	2.9	245	57400	120000
	25.00	1000	1540	2310	280	1.9	243	61400	120000
	35.00	1000	1540	2310	200	0.98	218	67900	120000
	49.00	1000	1380	2070	143	0.72	201	75100	120000
	70.00	1000	1380	2070	100	0.35	156	83600	120000
	100.00	1000	1050	1570	70	0.29	123	93100	120000

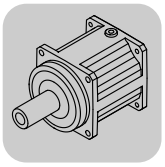

57 075 01 07

PSBF721..

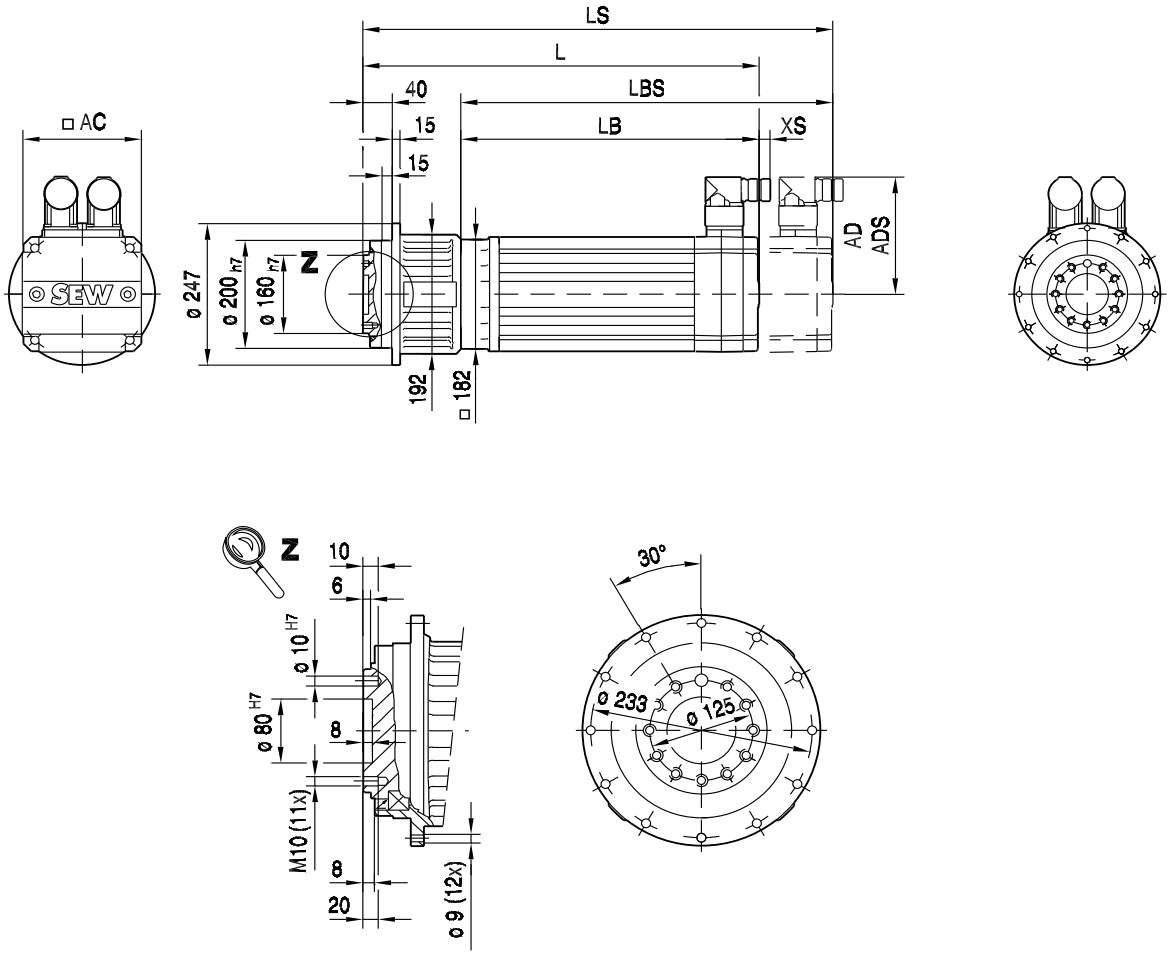

(→ 📖 144)	CMP80S	CMP80M	CMP80L	CMP100S	CMP100M	CMP100L		
AC	137	137	137	162	162	162		
AD	134	134	134	146	146	146		
ADS	137	137	137	147	147	147		
L	340	374	437	372	407	487		
LS	418	452	515	468	503	583		
LB	195	229	292	227	262	342		
LBS	273	307	370	323	358	438		
XS	37	37	37	37	37	37		

57 076 01 07

PSBF722..

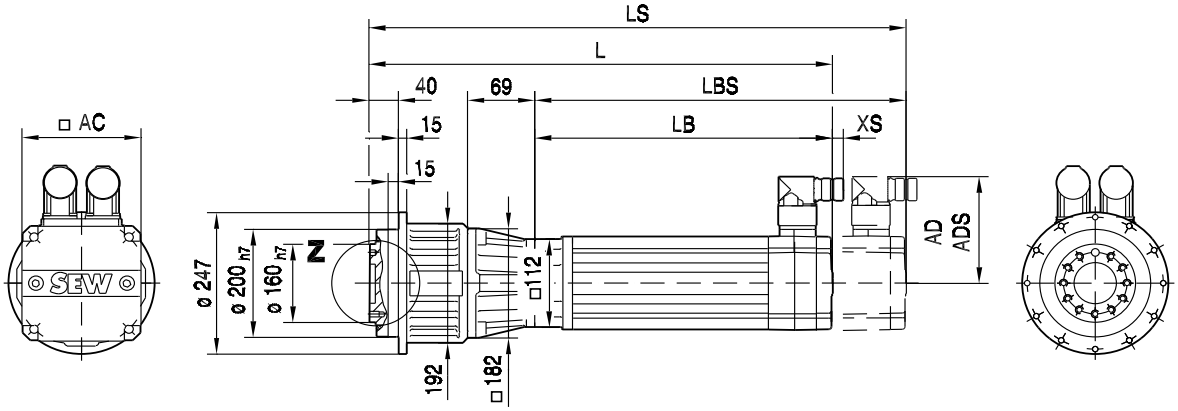

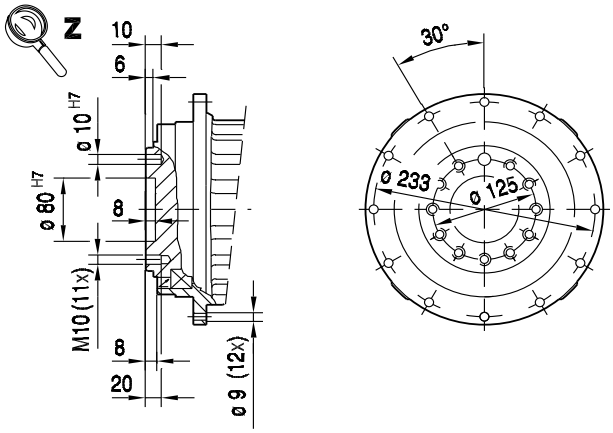

(→ 144)	CMP50M	CMP50L	CMP63S	CMP63M	CMP63L	CMP71S	CMP71M	CMP71L	CMP80S	CMP80M	CMP80L
AC	73	73	88	88	88	115	115	115	137	137	137
AD	86	86	92	92	92	102	102	102	134	134	134
ADS	86	86	92	92	92	104	104	104	137	137	137
L	394	433	390	440	490	382	407	457	421	456	523
LS	423	462	419	469	519	447	472	522	499	534	601
LB	180	219	176	226	276	168	193	243	207	242	309
LBS	209	248	205	255	305	233	258	308	285	320	387
XS	18	18	14	14	14	11	11	11	37	37	37

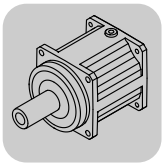

14.3.6 PSBF 821/822

M_{aDyn} [Nm]		CMP									
	i	63L	71S	71M	71L	80S	80M	80L	100S	100M	100L
PSBF822 2	20.00				910	820	1220	2090	1330	2110	>2500
	25.00	740		750	1140	1030	1530	>2500	1670	>2500	>2500
	35.00	1040		1050	1600	1440	2140	>2500	2340	>2500	
	49.00	1450		1470	2250	2020	>2740	>2740	>2740	>2740	
	70.00	2080	1310	2110	>2740	>2740	>2740		>2740		
	100.00	>2060	1880	>2060	>2060	>2060	>2060		>2060		

→ 144

m [kg]		CMP									
	s	63L	71S	71M	71L	80S	80M	80L	100S	100M	100L
PSBF821	1	42	43	44	46	49	51	55	56	60	69
PSBF822	2	55	57	58	60	63	65	69	70	74	83

CMP..				M1;M3;M5-6			M2			M4			φ		
	i	n_{epk} [1/min]	η [%]	a_0	a_1	a_2	a_0	a_1	a_2	a_0	a_1	a_2	[']	/R [']	/M [']
PSBF822 2	20.00	6000	98	4406	-24.058	0	5007	-34.125	0	6113	-58.782	0	6	3	1
	25.00	6000	98	4478	-25.333	0	5074	-35.377	0	6180	-60.325	0	6	3	1
	35.00	6000	98	4703	-28.994	0	5302	-39.407	0	6432	-65.521	0	6	3	1
	49.00	6000	98	5602	-42.367	0	6553	-62.572	0	7505	-89.863	0	6	3	1
	70.00	6000	98	5901	-52.384	0	6737	-71.810	0	7681	-100.3	0	6	3	1
	100.00	6000	98	6600	-77.444	0	7873	-113.8	0	8521	-140.7	0	6	3	1

CMP.. n_e = 1000	i	M_{amax} [Nm]	M_{apk} [Nm]	$M_{aNotaus}$ [Nm]	n_{ak} [1/min]	J_{GA} 10^{-4} [kgm^2]	c_T PSBF [Nm/']	F_{Ramax} PSBF [N]	F_{Rapk} PSBF [N]
PSBF822 2	20.00	1750	2500	3750	265	6.8	636	94200	180000
	25.00	1750	2500	3750	268	4.4	605	100700	180000
	35.00	1750	2500	3750	200	2.3	490	111400	180000
	49.00	1750	2740	4110	143	1.8	514	123200	180000
	70.00	1750	2740	4110	100	0.91	354	137100	180000
	100.00	1750	2060	3090	70	0.78	315	152600	180000

57 051 01 06

PSBF822..

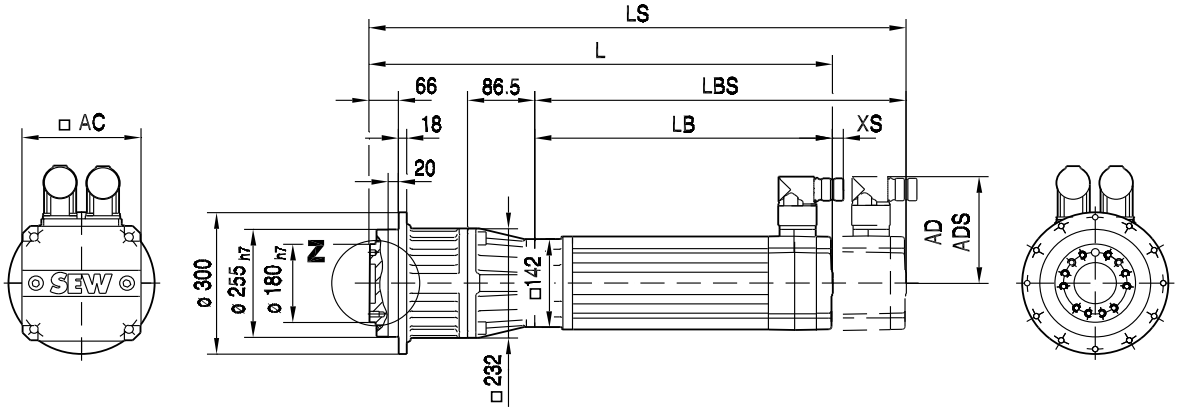

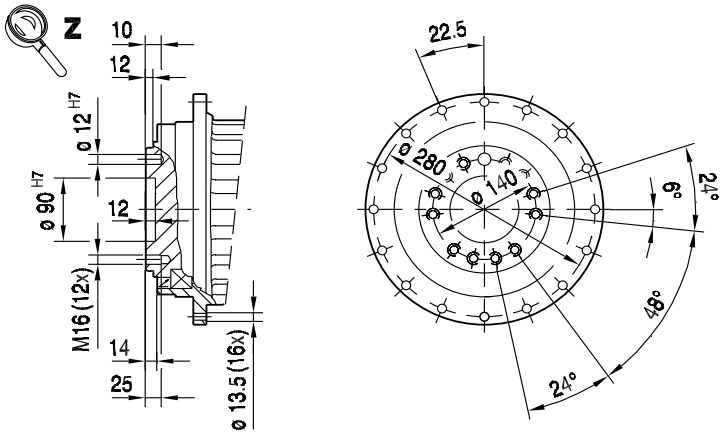

(→ 144)	CMP63L	CMP71S	CMP71M	CMP71L	CMP80S	CMP80M	CMP80L	CMP100S	CMP100M	CMP100L
AC	88	115	115	115	137	137	137	162	162	162
AD	92	102	102	102	134	134	134	146	146	146
ADS	92	104	104	104	137	137	137	147	147	147
L	521	412	437	487	452	486	549	483	518	598
LS	549	477	502	552	529	563	626	579	614	694
LB	268	160	185	235	199	233	296	231	266	346
LBS	297	225	250	300	277	311	374	327	362	442
XS	14	11	11	11	37	37	37	37	37	37

14.4 PSBF EPH.. [mm]

55 035 02 03

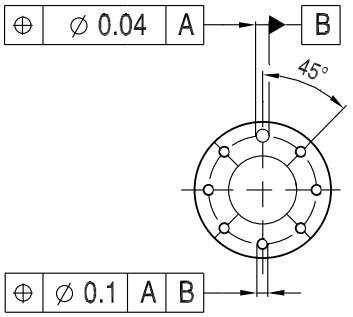

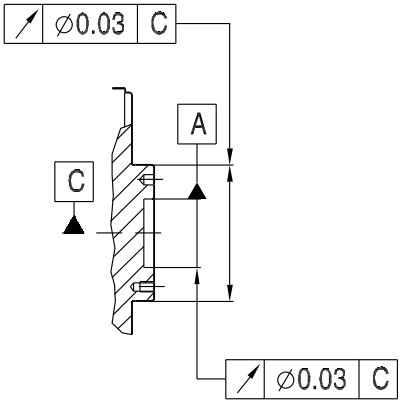

BSBF202 PSBF221/222
BSBF302 PSBF321/322

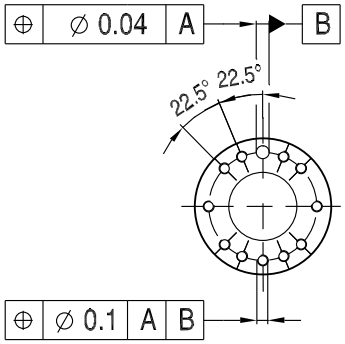

BSBF402 PSBF521/522
BSBF502

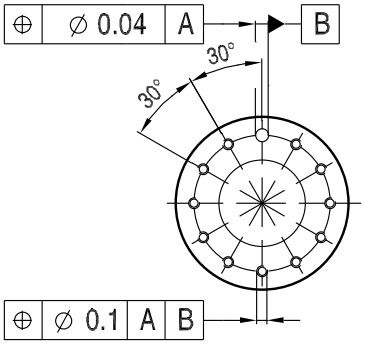

BSBF602 PSBF621/622
BSBF802 PSBF721/722
PSBF821/822

55 036 00 03

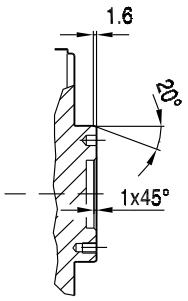

15 PS.C..CMP

15.1 PSC, PSKC, PSCZ, PSKCZ..CMP

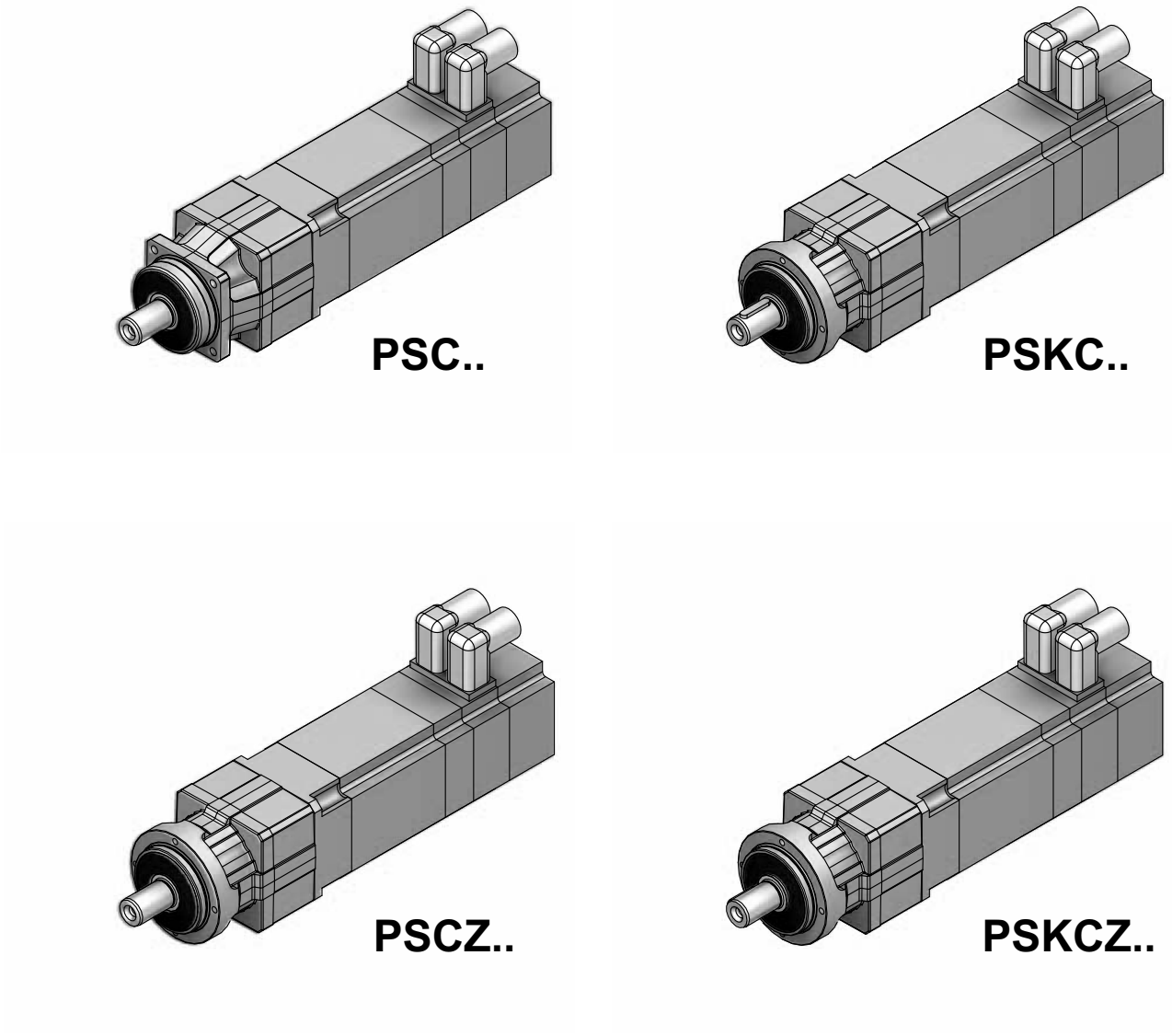

63320axx

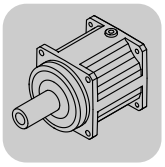

15.2 PSC..[mm]

15.2.1 PS.C 221/222

M_{aDyn} [Nm]		CMP						
	i	**40M**	**50S**	**50M**	**50L**	**63S**	**63M**	**63L**
PSC221 1	3.00	11	15	31	>40	33	>40	>40
	5.00	19	26	>42	>42	>42	>42	>42
	7.00	26	36	>39	>39	>39	>39	
	10.00	>37	>37					
PSC222 2	15.00	>40	>40	>40	>40	>40	>40	>40
	21.00	>40	>40	>40	>40	>40	>40	
	25.00	>42	>42	>42	>42	>42	>42	>42
	30.00	>40	>40					
	35.00	>42	>42	>42	>42	>42	>42	
	49.00	>39	>39	>39	>39	>39	>39	
	50.00	>42	>42					
	70.00	>39	>39					
	100.00	>37	>37					

→ **144**

m [kg]		CMP						
	s	**40M**	**50S**	**50M**	**50L**	**63S**	**63M**	**63L**
PSC221	1	3.2	4.0	5.0	5.9	6.3	7.8	9.3
PSC222	2	3.8	4.7	5.6	6.5	7.0	8.5	10.0

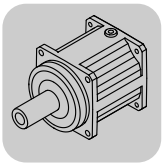

CMP..	i	n_{epk} [1/min]	η [%]	M1;M3;M5-6 a_0	M1;M3;M5-6 a_1	M1;M3;M5-6 a_2	M2 a_0	M2 a_1	M2 a_2	M4 a_0	M4 a_1	M4 a_2	φ [']
PSC221 1	3.00	7000	99	101.0	-0.093	0	106.0	-0.104	0	109.0	-0.110	0	10
	5.00	7000	99	160.0	-0.181	0	163.0	-0.190	0	167.0	-0.200	0	10
	7.00	7000	99	186.0	-0.257	0	187.0	-0.264	0	186.0	-0.267	0	10
	10.00	7000	99	158.0	-0.178	0	161.0	-0.184	0	164.0	-0.194	0	10
PSC222 2	15.00	7000	98	197.0	-0.680	0	196.0	-0.693	0	197.0	-0.703	0	15
	21.00	7000	98	217	-0.912	0	216	-0.924	0	217	-0.935	0	15
	25.00	7000	98	367	-2.040	0	366	-2.086	0	367	-2.099	0	15
	30.00	7000	98	197.0	-0.676	0	196.0	-0.685	0	197.0	-0.695	0	15
	35.00	7000	98	408	-2.785	0	406	-2.828	0	407	-2.842	0	15
	49.00	7000	98	547	-5.185	0	545	-5.269	0	545	-5.285	0	15
	50.00	7000	98	367	-2.025	0	366	-2.062	0	367	-2.075	0	15
	70.00	7000	98	491	-3.754	0	490	-3.827	0	491	-3.841	0	15
	100.00	7000	98	628	-6.809	0	627	-6.948	0	627	-6.962	0	15

CMP.. n_e = 1500	i	M_{amax} [Nm]	M_{apk} [Nm]	$M_{aNotaus}$ [Nm]	n_{ak} [1/min]	J_{GA} 10^{-4} [kgm^2]	c_T PSC [Nm/']	F_{Ramax} PSC [N]	F_{Rapk} PSC [N]
PSC221 1	3.00	29	40	60	1500	0.17	3.5	1170	2000
	5.00	34	42	63	720	0.058	3.4	1390	2000
	7.00	32	39	59	800	0.030	3.3	1550	2000
	10.00	30	37	56	700	0.014	2.9	1750	2000
PSC222 2	15.00	29	40	60	467	0.057	2.9	2000	2000
	21.00	29	40	60	333	0.030	2.9	2000	2000
	25.00	34	42	63	280	0.053	3.0	2000	2000
	30.00	29	40	60	233	0.014	2.8	2000	2000
	35.00	34	42	63	200	0.027	3.0	2000	2000
	49.00	32	39	59	143	0.027	2.9	2000	2000
	50.00	34	42	63	140	0.013	2.9	2000	2000
	70.00	32	39	59	100	0.013	2.8	2000	2000
	100.00	30	37	56	70	0.013	2.6	2000	2000

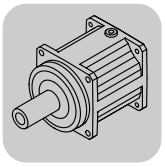

57 031 00 07

PSC221..

CMP..

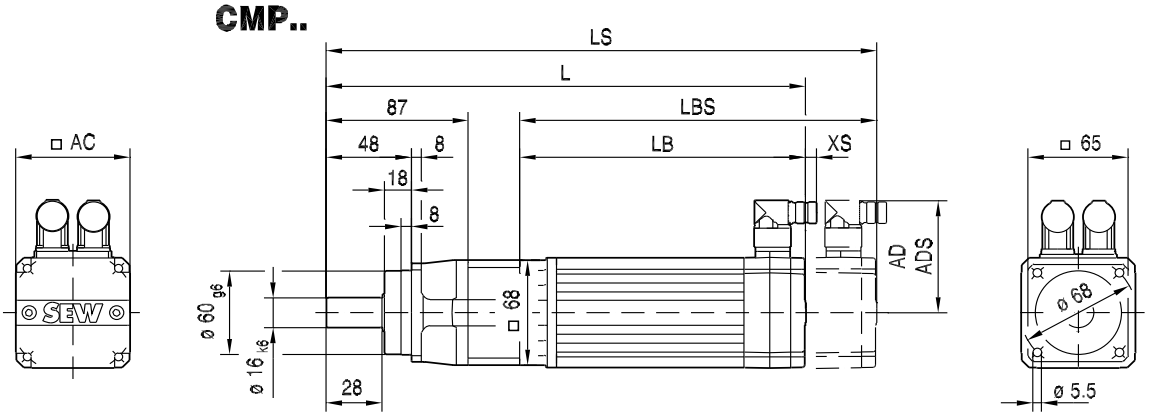

PSC / PSCZ

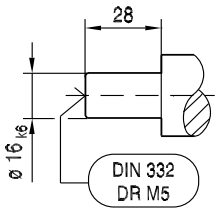

PSKC / PSKCZ

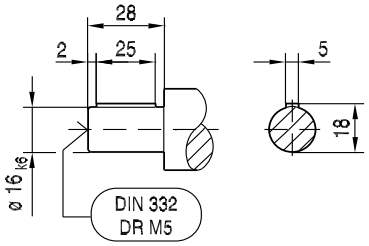

PSCZ221..

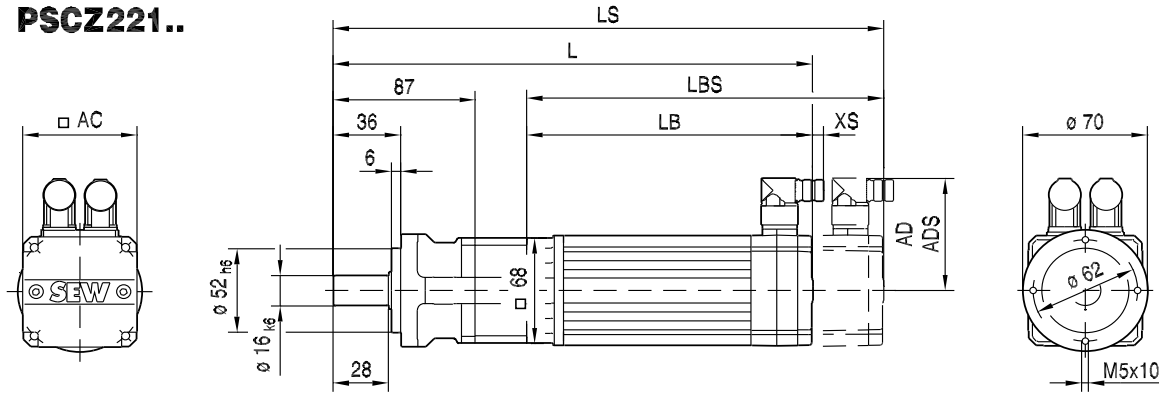

(→ 144)	CMP40M	CMP50S	CMP50M	CMP50L	CMP63S	CMP63M	CMP63L	
AC	57	73	73	73	88	88	88	
AD	78	86	86	86	92	92	92	
ADS	78	86	86	86	92	92	92	
L	270	272	311	350	307	357	407	
LS	300	301	340	379	336	386	435	
LB	149	151	190	229	186	236	286	
LBS	179	180	219	258	215	265	315	
XS	19	18	18	18	14	14	14	

57 032 00 07

PSC222..

CMP..

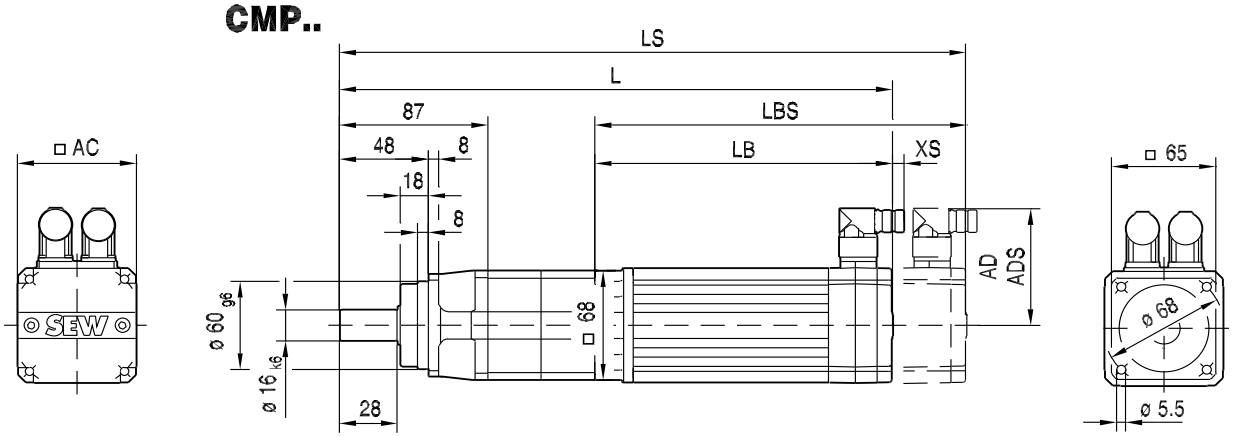

PSC / PSCZ

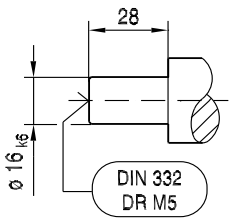

PSKC / PSCKZ

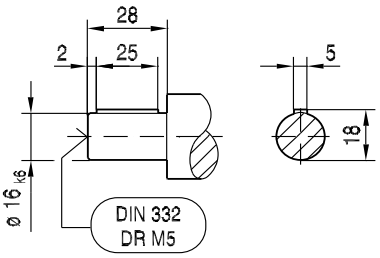

PSCZ222..

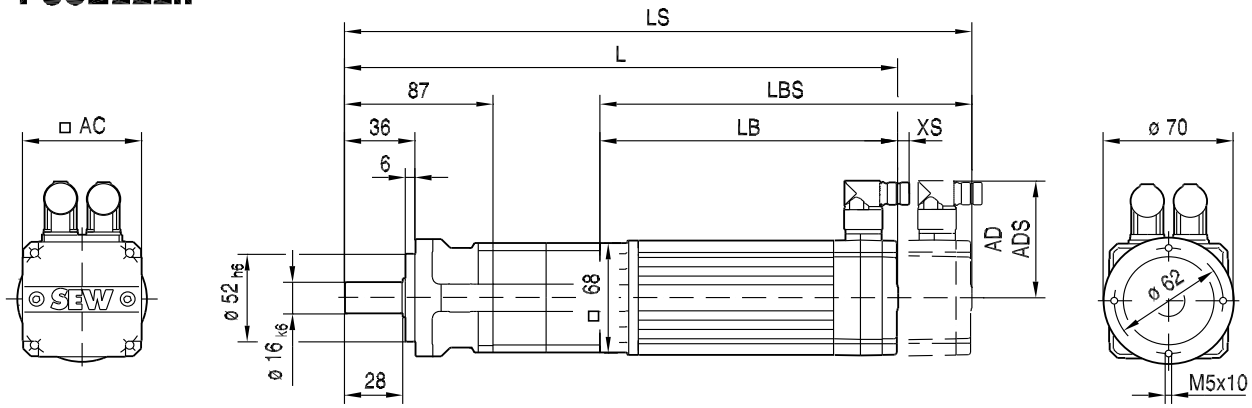

(→ 144)	CMP40M	CMP50S	CMP50M	CMP50L	CMP63S	CMP63M	CMP63L	
AC	57	73	73	73	88	88	88	
AD	78	86	86	86	92	92	92	
ADS	78	86	86	86	92	92	92	
L	305	307	346	385	342	392	442	
LS	335	336	375	414	370	420	470	
LB	149	151	190	229	186	236	286	
LBS	179	180	219	258	215	265	315	
XS	19	18	18	18	14	14	14	

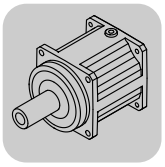

15.2.2 PS.C 321/322

M_{aDyn} [Nm]		CMP							
	i	50S	50M	50L	63S	63M	63L	71S	71M
PSC321 1	3.00	15	31	46	33	64	>86	57	>86
	5.00	26	51	76	55	>91	>91	>91	>91
	7.00	36	71	>85	77	>85	>85	>85	>85
	10.00	51	>81	>81	>81				
PSC322 2	15.00	76	>86	>86	>86	>86	>86	>86	>86
	21.00	>86	>86	>86	>86	>86	>86	>86	>86
	25.00	>91	>91	>91	>91	>91	>91	>91	>91
	30.00	>86	>86	>86	>86				
	35.00	>91	>91	>91	>91	>91	>91	>91	>91
	49.00	>85	>85	>85	>85	>85	>85	>85	>85
	50.00	>91	>91	>91	>91				
	70.00	>85	>85	>85	>85				
	100.00	>81	>81	>81	>81				

→ 📖 144

m [kg]		CMP							
	s	50S	50M	50L	63S	63M	63L	71S	71M
PSC321	1	6.4	7.3	8.2	7.8	9.2	11	12	13
PSC322	2	7.8	8.7	9.6	9.2	11	12	13	15

CMP..				M1;M3;M5-6			M2			M4			φ
	i	n_{epk} [1/min]	η [%]	a_0	a_1	a_2	a_0	a_1	a_2	a_0	a_1	a_2	[']
PSC321 1	3.00	6500	99	183.0	-0.184	0	190.0	-0.201	0	191.0	-0.212	0	10
	5.00	6500	99	257	-0.296	0	262	-0.308	0	264	-0.324	0	10
	7.00	6500	99	257	-0.341	0	261	-0.350	0	259	-0.360	0	10
	10.00	6500	99	247	-0.395	0	251	-0.406	0	251	-0.418	0	10
PSC322 2	15.00	6500	98	351	-1.198	0	350	-1.211	0	352	-1.237	0	15
	21.00	6500	98	365	-1.430	0	364	-1.442	0	366	-1.468	0	15
	25.00	6500	98	638	-3.473	0	638	-3.535	0	640	-3.569	0	15
	30.00	6500	98	380	-1.800	0	379	-1.814	0	381	-1.841	0	15
	35.00	6500	98	665	-4.185	0	664	-4.242	0	665	-4.277	0	15
	49.00	6500	98	844	-7.356	0	843	-7.465	0	844	-7.501	0	15
	50.00	6500	98	692	-5.309	0	691	-5.366	0	692	-5.402	0	15
	70.00	6500	98	882	-9.390	0	881	-9.501	0	882	-9.537	0	15
	100.00	6500	98	1114	-16.842	0	1113	-17.057	0	1113	-17.091	0	15

CMP.. n_e = 1500	i	M_{amax} [Nm]	M_{apk} [Nm]	$M_{aNotaus}$ [Nm]	n_{ak} [1/min]	J_{GA} 10^{-4} [kgm^2]	c_T PSC [Nm/']	F_{Ramax} PSC [N]	F_{Rapk} PSC [N]
PSC321 1	3.00	62	86	129	633	0.52	10	1710	4000
	5.00	74	91	136	300	0.17	11	2030	4000
	7.00	69	85	128	329	0.092	10	2270	4000
	10.00	66	81	122	360	0.045	8.6	2560	4000
PSC322 2	15.00	62	86	129	467	0.16	8.3	2930	4000
	21.00	62	86	129	333	0.085	8.1	3280	4000
	25.00	74	91	136	280	0.15	9.0	3470	4000
	30.00	62	86	129	233	0.042	7.7	3690	4000
	35.00	74	91	136	200	0.078	8.9	3880	4000
	49.00	69	85	128	143	0.076	8.6	4000	4000
	50.00	74	91	136	140	0.038	8.5	4000	4000
	70.00	69	85	128	100	0.037	8.4	4000	4000
	100.00	66	81	122	70	0.037	7.3	4000	4000

57 033 00 07

PSC321..

CMP..

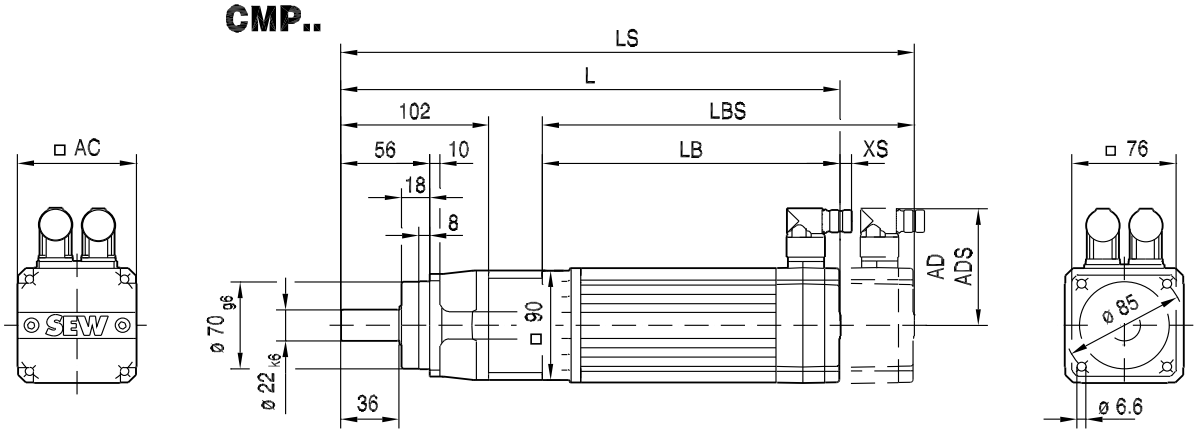

PSC / PSCZ

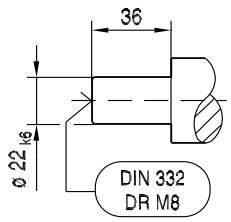

PSKC / PSKCZ

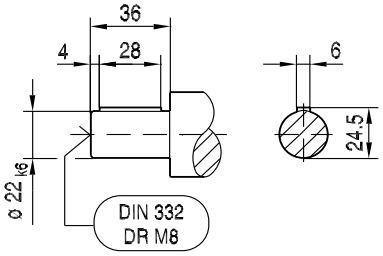

PSCZ321..

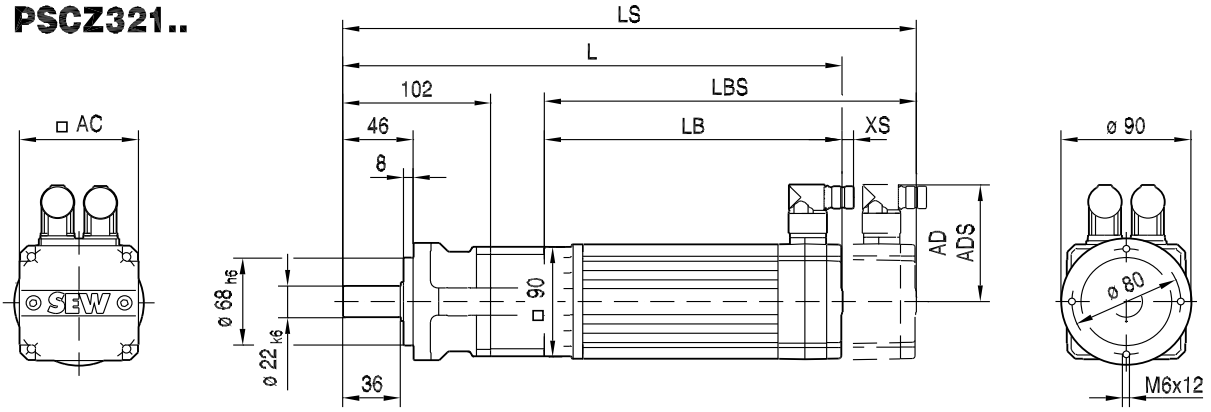

(→ 144)	CMP50S	CMP50M	CMP50L	CMP63S	CMP63M	CMP63L	CMP71S	CMP71M
AC	73	73	73	88	88	88	115	115
AD	86	86	86	92	92	92	102	102
ADS	86	86	86	92	92	92	104	104
L	290	329	368	325	375	425	316	341
LS	319	358	397	354	404	454	381	406
LB	146	185	224	181	231	281	173	198
LBS	175	214	253	210	260	310	238	263
XS	18	18	18	14	14	14	11	11

57 034 00 07

PSC322..

CMP..

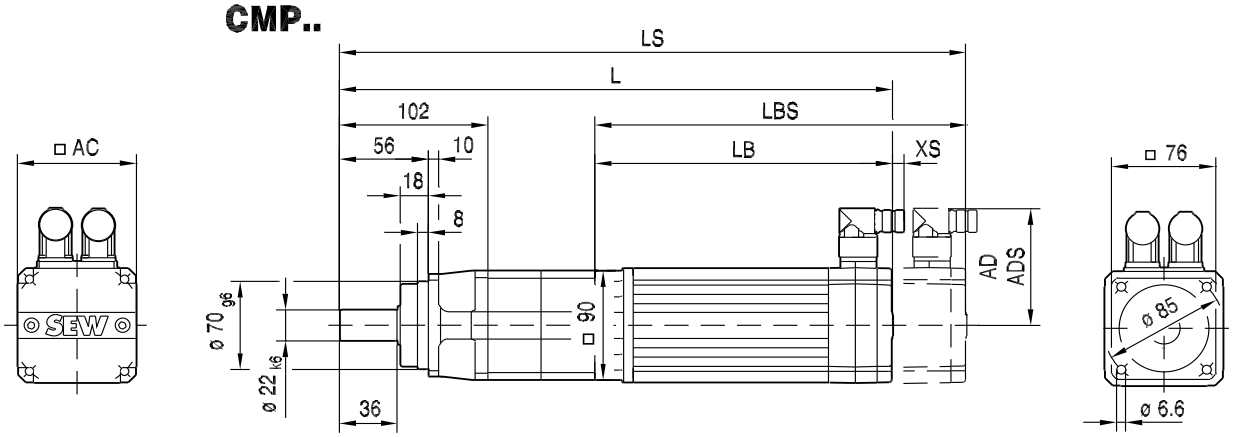

PSC / PSCZ

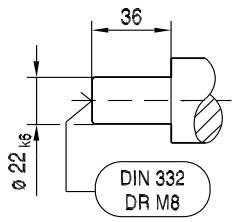

PSKC / PSCKZ

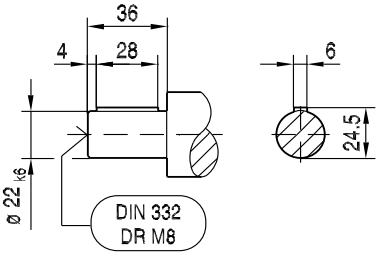

PSCZ322..

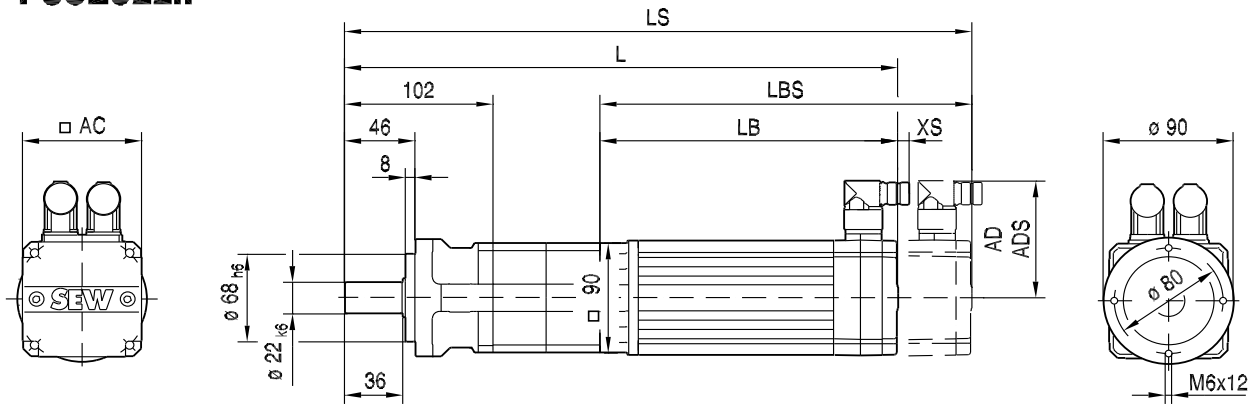

(→ 144)	CMP50S	CMP50M	CMP50L	CMP63S	CMP63M	CMP63L	CMP71S	CMP71M
AC	73	73	73	88	88	88	115	115
AD	86	86	86	92	92	92	102	102
ADS	86	86	86	92	92	92	104	104
L	332	371	410	367	417	467	358	383
LS	361	400	439	395	445	495	423	448
LB	146	185	224	181	231	281	173	198
LBS	175	214	253	210	260	310	238	263
XS	18	18	18	14	14	14	11	11

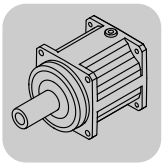

15.2.3 PS.C 521/522

M_{aDyn} [Nm]		CMP									
	i	50M	50L	63S	63M	63L	71S	71M	71L	80S	80M
PSC521 1	3.00	31	46	33	64	90	57	91	139	125	186
	5.00	51	76	55	106	150	95	152	>220	205	>220
	7.00	71	107	77	148	>205	133	>205	>205	>205	>205
	10.00	102	152	110	>199	>199	190	>199			
PSC522 2	15.00	151	>200	163	>200	>200	>200	>200	>200	>200	>200
	21.00	>200	>200	>200	>200	>200	>200	>200	>200	>200	>200
	25.00	>220	>220	>220	>220	>220	>220	>220	>220	>220	>220
	30.00	>200	>200	>200	>200	>200	>200	>200			
	35.00	>220	>220	>220	>220	>220	>220	>220	>220	>220	>220
	49.00	>205	>205	>205	>205	>205	>205	>205	>205	>205	>205
	50.00	>220	>220	>220	>220	>220	>220	>220			
	70.00	>205	>205	>205	>205	>205	>205	>205			
	100.00	>199	>199	>199	>199	>199	>199	>199			

→ 📖 144

m [kg]		CMP									
	s	50M	50L	63S	63M	63L	71S	71M	71L	80S	80M
PSC521	1	10	11	11	13	14	15	17	19	22	24
PSC522	2	13	14	14	16	17	18	20	22	25	27

CMP..				M1;M3;M5-6			M2			M4			φ
	i	n_{epk} [1/min]	η [%]	a_0	a_1	a_2	a_0	a_1	a_2	a_0	a_1	a_2	[']
PSC521 1	3.00	6000	99	403	-0.446	0	417	-0.486	0	416	-0.508	0	10
	5.00	6000	99	593	-0.735	0	606	-0.769	0	602	-0.797	0	10
	7.00	6000	99	652	-0.910	0	664	-0.940	0	651	-0.956	0	10
	10.00	6000	99	720	-1.181	0	747	-1.257	0	743	-1.300	0	10
PSC522 2	15.00	6000	98	805	-3.101	0	803	-3.130	0	808	-3.195	0	15
	21.00	6000	98	846	-3.659	0	843	-3.684	0	848	-3.751	0	15
	25.00	6000	98	1507	-9.199	0	1506	-9.346	0	1510	-9.435	0	15
	30.00	6000	98	900	-4.554	0	898	-4.592	0	903	-4.663	0	15
	35.00	6000	98	1591	-10.994	0	1589	-11.130	0	1593	-11.223	0	15
	49.00	6000	98	2118	-20.220	0	2115	-20.486	0	2119	-20.586	0	15
	50.00	6000	98	1701	-13.874	0	1699	-14.030	0	1703	-14.129	0	15
	70.00	6000	98	2269	-25.618	0	2267	-25.936	0	2270	-26.043	0	15
	100.00	6000	98	3031	-48.542	0	3029	-49.177	0	3031	-49.290	0	15

CMP.. n_e = 1500	i	M_{amax} [Nm]	M_{apk} [Nm]	$M_{aNotaus}$ [Nm]	n_{ak} [1/min]	J_{GA} 10^{-4} [kgm^2]	c_T PSC [Nm/']	F_{Ramax} PSC [N]	F_{Rapk} PSC [N]
PSC521 1	3.00	147	203	305	900	2.1	27	2900	6750
	5.00	181	223	334	360	0.85	28	3440	6750
	7.00	169	209	313	414	0.37	26	3850	6750
	10.00	161	199	298	440	0.18	22	4330	6750
PSC522 2	15.00	147	203	305	467	0.81	21	4960	6750
	21.00	147	203	305	333	0.35	21	5550	6750
	25.00	181	223	334	280	0.76	23	5880	6750
	30.00	147	203	305	233	0.17	20	6250	6750
	35.00	181	223	334	200	0.32	23	6580	6750
	49.00	169	209	313	143	0.31	22	6750	6750
	50.00	181	223	334	140	0.16	22	6750	6750
	70.00	169	209	313	100	0.15	22	6750	6750
	100.00	161	199	298	70	0.15	19	6750	6750

57 035 00 07

PSC521..

CMP..

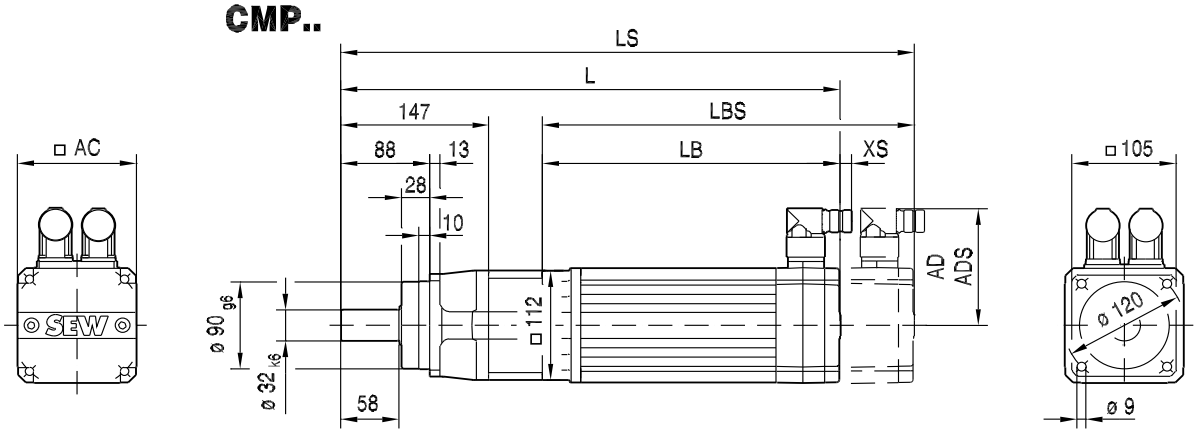

PSC / PSCZ

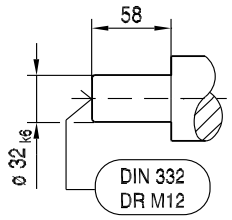

PSKC / PSKCZ

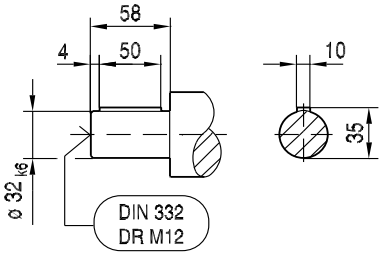

PSCZ521..

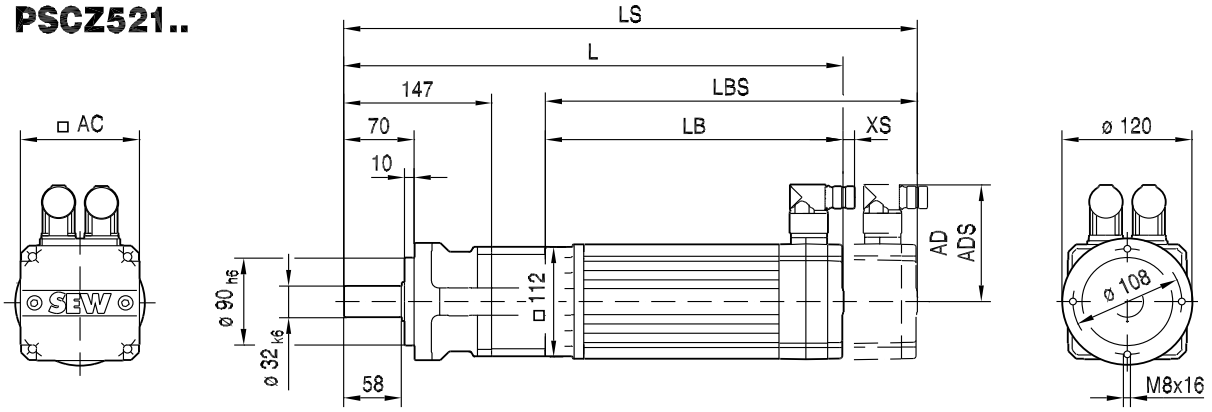

(→ 144)	CMP50M	CMP50L	CMP63S	CMP63M	CMP63L	CMP71S	CMP71M	CMP71L	CMP80S	CMP80M
AC	73	73	88	88	88	115	115	115	137	137
AD	86	86	92	92	92	102	102	102	134	134
ADS	86	86	92	92	92	104	104	104	137	137
L	381	420	377	427	477	368	393	443	407	442
LS	409	448	405	455	505	433	458	508	485	520
LB	180	219	176	226	276	168	193	243	207	242
LBS	209	248	205	255	305	233	258	308	285	320
XS	18	18	14	14	14	11	11	11	37	37

57 036 00 07

PSC522..

CMP..

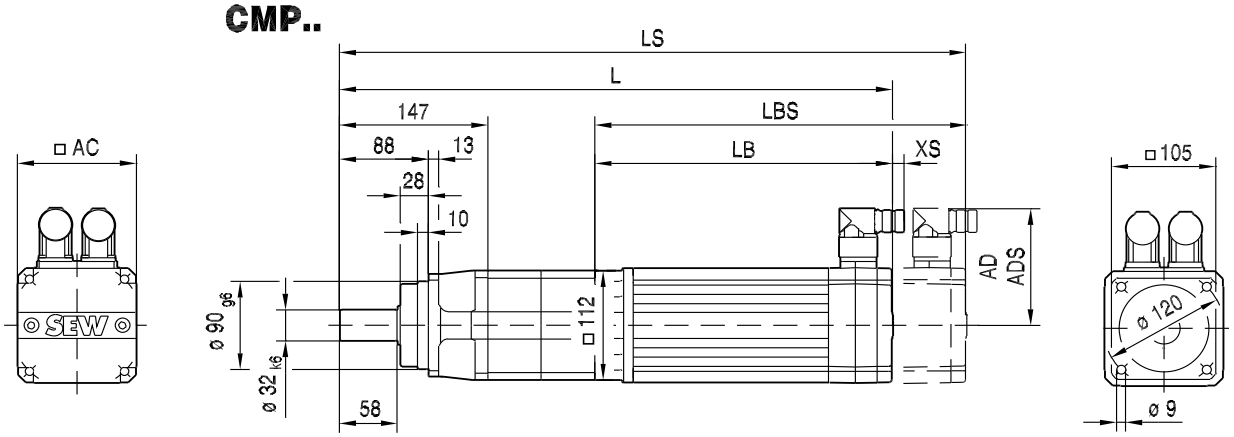

PSC / PSCZ

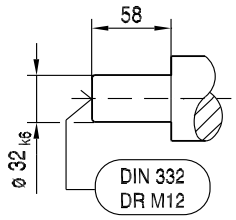

PSKC / PSCKZ

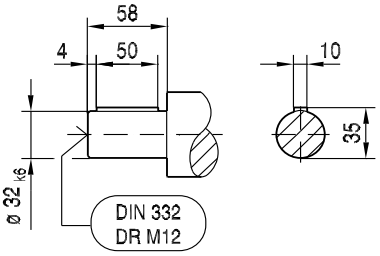

PSCZ522..

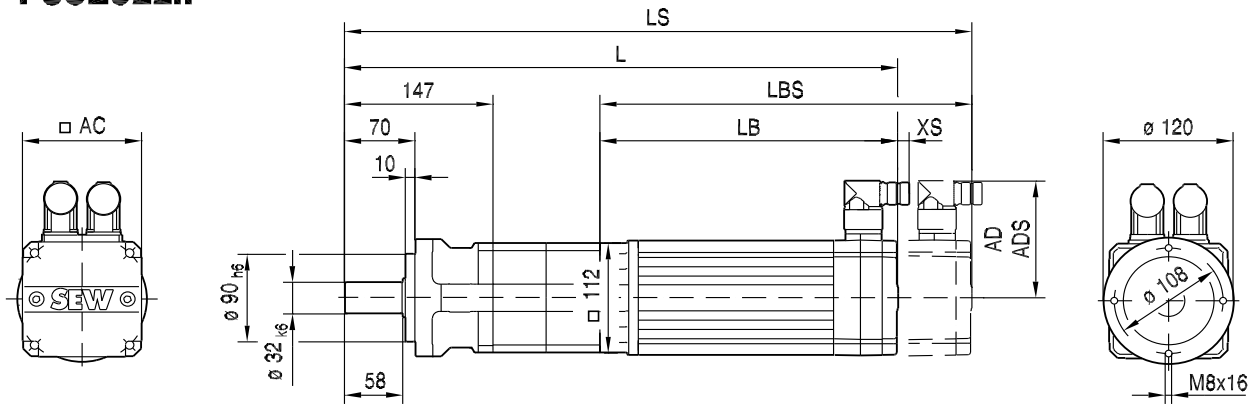

(→ 144)	CMP50M	CMP50L	CMP63S	CMP63M	CMP63L	CMP71S	CMP71M	CMP71L	CMP80S	CMP80M
AC	73	73	88	88	88	115	115	115	137	137
AD	86	86	92	92	92	102	102	102	134	134
ADS	86	86	92	92	92	104	104	104	137	137
L	434	473	430	480	530	421	446	496	461	496
LS	463	502	458	508	558	486	511	561	538	573
LB	180	219	176	226	276	168	193	243	207	242
LBS	209	248	205	255	305	233	258	308	285	320
XS	18	18	14	14	14	11	11	11	37	37

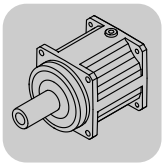

15.2.4 PS.C 621/622

M_{aDyn} [Nm]		CMP								
	i	63L	71M	71L	80S	80M	80L	100S	100M	100L
PSC621 1	5.00	150	152	230	205	305	>425	335	>425	>425
	7.00	210	210	325	290	>395	>395	>395	>395	
	10.00	300	300	>380	>380	>380		>380		
PSC622 2	25.00	>425	>425	>425	>425	>425	>425	>425	>425	>425
	35.00	>425	>425	>425	>425	>425	>425	>425	>425	
	49.00	>395	>395	>395	>395	>395	>395	>395	>395	
	50.00	>425	>425	>425	>425	>425		>425		
	70.00	>395	>395	>395	>395	>395		>395		
	100.00	>380	>380	>380	>380	>380		>380		

→ 144

m [kg]		CMP								
	s	63L	71M	71L	80S	80M	80L	100S	100M	100L
PSC621	1	19	22	24	27	29	33	34	38	47
PSC622	2	25	27	29	32	34	38	39	43	52

CMP..				M1;M3;M5-6			M2			M4			φ
	i	n_{epk} [1/min]	η [%]	a_0	a_1	a_2	a_0	a_1	a_2	a_0	a_1	a_2	[']
PSC621 1	5.00	5000	99	1028	-1.462	0	1050	-1.528	0	1024	-1.567	0	10
	7.00	5000	99	1139	-1.828	0	1163	-1.895	0	1164	-2.016	0	10
	10.00	5000	99	1034	-1.584	0	1052	-1.625	0	1046	-1.715	0	10
PSC622 2	25.00	5000	98	2766	-19.666	0	2776	-20.238	0	2785	-20.459	0	15
	35.00	5000	98	2918	-23.494	0	2930	-24.135	0	2939	-24.384	0	15
	49.00	5000	98	3883	-43.212	0	3897	-44.342	0	3905	-44.613	0	15
	50.00	5000	98	2825	-21.646	0	2828	-22.031	0	2838	-22.275	0	15
	70.00	5000	98	3755	-39.658	0	3762	-40.489	0	3770	-40.750	0	15
	100.00	5000	98	4863	-72.797	0	4873	-74.329	0	4877	-74.574	0	15

CMP.. n_e = 1500		M_{amax} [Nm]	M_{apk} [Nm]	$M_{aNotaus}$ [Nm]	n_{ak} [1/min]	J_{GA} 10^{-4} [kgm^2]	c_T PSC [Nm/']	F_{Ramax} PSC [N]	F_{Rapk} PSC [N]
	i								
PSC621 1	5.00	347	427	640	820	2.2	60	5390	11000
	7.00	323	398	597	929	1.2	55	6030	11000
	10.00	308	380	569	700	0.58	46	6790	11000
PSC622 2	25.00	347	427	640	280	1.8	51	9220	11000
	35.00	347	427	640	200	0.96	51	10300	11000
	49.00	323	398	597	143	0.94	48	11000	11000
	50.00	347	427	640	140	0.48	49	11000	11000
	70.00	323	398	597	100	0.46	47	11000	11000
	100.00	308	380	569	70	0.46	41	11000	11000

57 037 00 07

PSC621..

CMP..

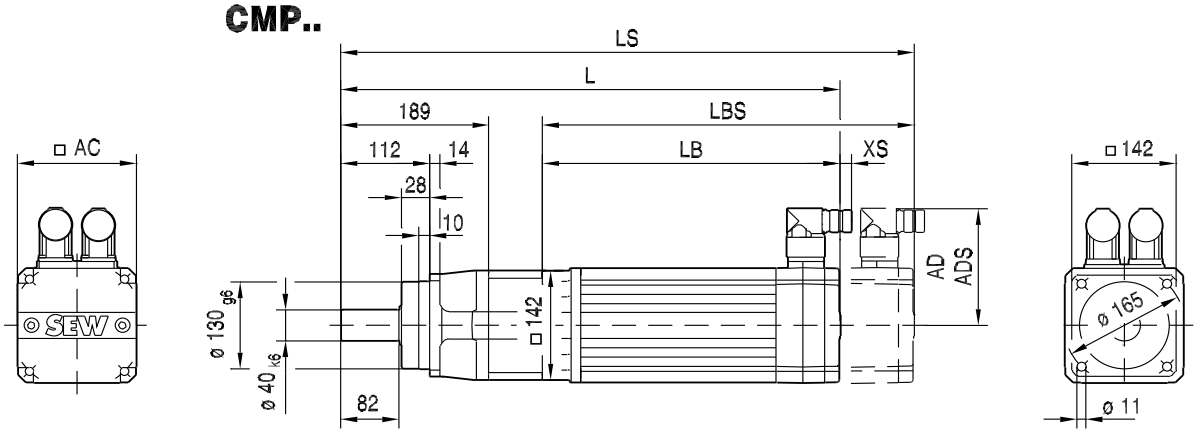

PSC / PSCZ

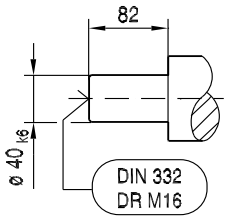

PSKC / PSKCZ

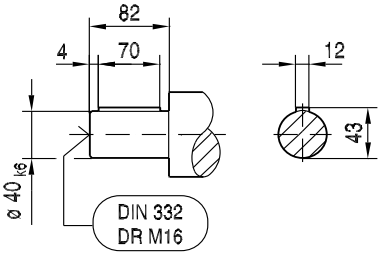

PSCZ621..

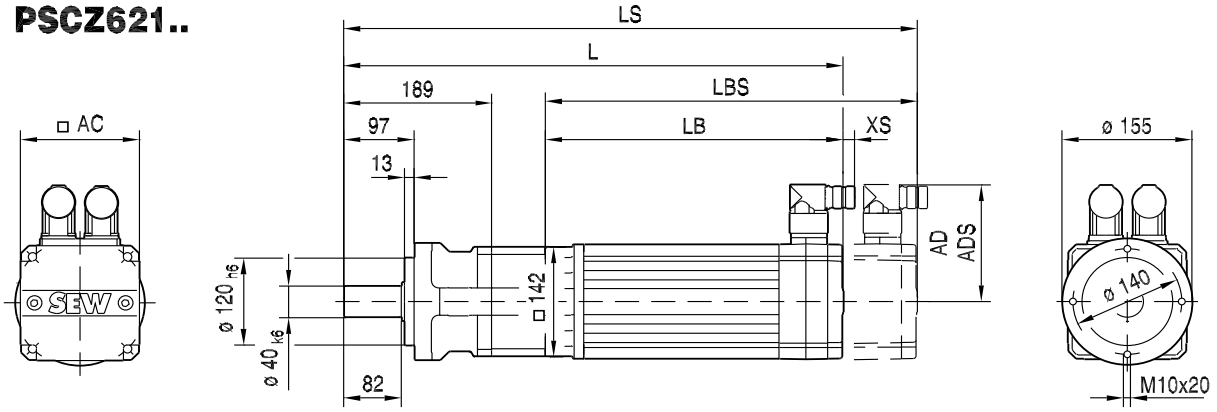

(→ 📖 144)	CMP63L	CMP71M	CMP71L	CMP80S	CMP80M	CMP80L	CMP100S	CMP100M	CMP100L
AC	88	115	115	137	137	137	162	162	162
AD	92	102	102	134	134	134	146	146	146
ADS	92	104	104	137	137	137	147	147	147
L	516	432	482	447	481	544	478	513	593
LS	545	497	547	524	558	621	575	610	690
LB	268	185	235	199	233	296	231	266	346
LBS	297	250	300	277	311	374	327	362	442
XS	14	11	11	37	37	37	37	37	37

57 038 00 07

PSC622..

CMP..

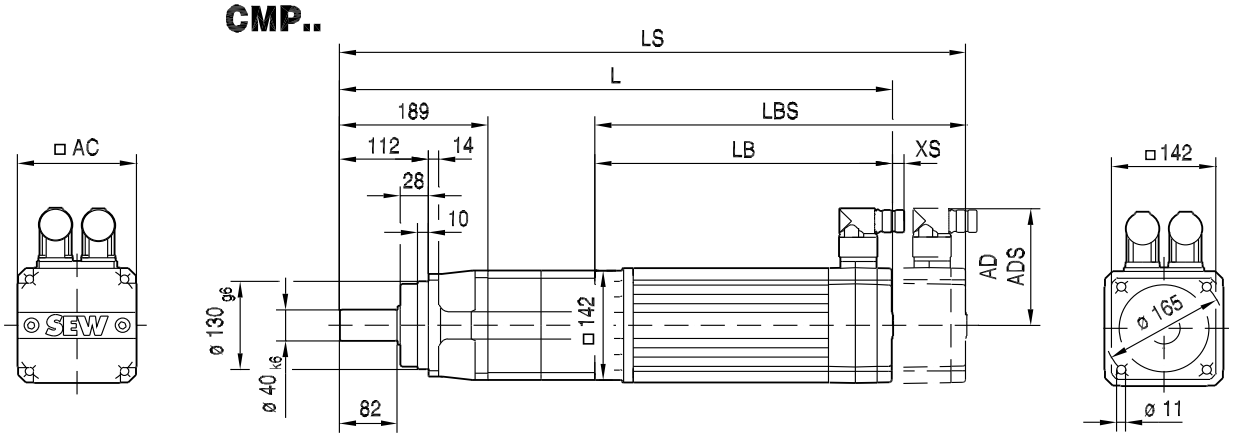

PSC / PSCZ

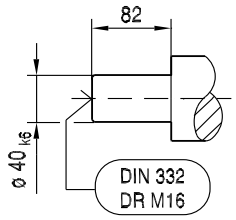

PSKC / PSCKZ

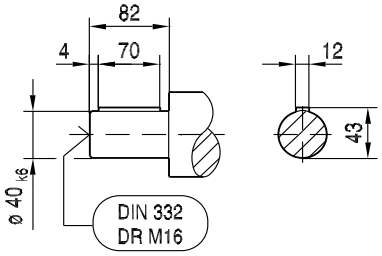

PSCZ622..

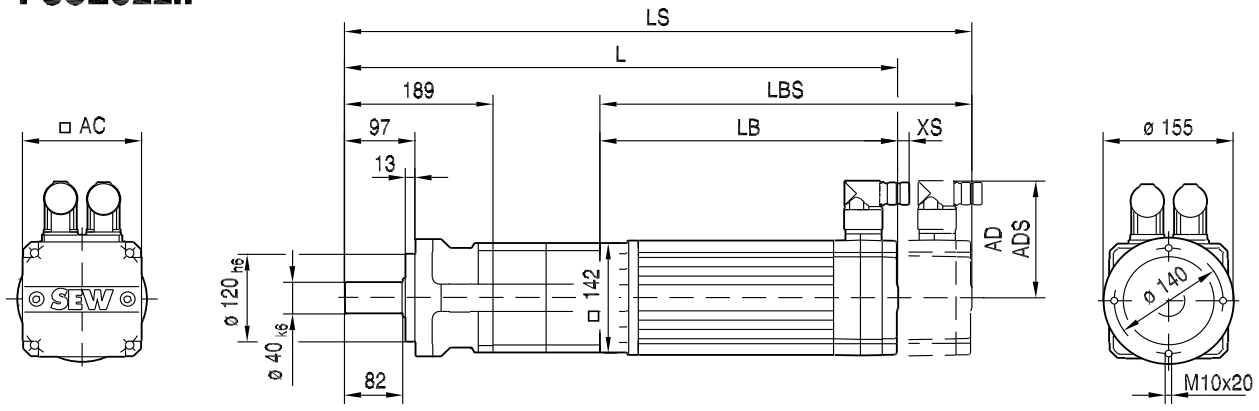

(→ 📖 144)	CMP63L	CMP71M	CMP71L	CMP80S	CMP80M	CMP80L	CMP100S	CMP100M	CMP100L
AC	88	115	115	137	137	137	162	162	162
AD	92	102	102	134	134	134	146	146	146
ADS	92	104	104	137	137	137	147	147	147
L	575	492	542	506	540	603	538	573	653
LS	604	556	606	584	618	681	634	669	749
LB	268	185	235	199	233	296	231	266	346
LBS	297	250	300	277	311	374	327	362	442
XS	14	11	11	37	37	37	37	37	37

16 Main Technical Data of Servomotors

Key to the technical data

n_N	Rated speed
M_0	Standstill torque (thermal continuous torque at low speeds)
I_0	Standstill current
M_{pk}	Dynamic limit torque
I_{max}	Maximum permitted motor current
M_{0VR}	Standstill torque with forced cooling fan
I_{0VR}	Standstill current with forced cooling fan
J_{mot}	Mass moment of inertia of the motor
J_{bmot}	Mass moment of inertia of the brakemotor
M_{B1}	Standard braking torque
M_{B2}	Optional braking torque
W_{max1}	Maximum permitted braking work per braking operation
W_{max2}	Maximum permitted braking work per braking operation with optional braking torque
L_1	Inductance between connection phase and star point
R_1	Resistance between connection phase and star point
U_{p0} cold	Internal voltage at 1000 rpm
m_{mot}	Weight of the motor
m_{bmot}	Weight of the brakemotor

16.1 Technical data of CMP motors

Synchronous servomotors with 400 V system voltage

n_N min^{-1}	Motor	M_0 Nm	I_0 A	M_{pk} Nm	I_{max} A	M_{0VR} Nm	I_{0VR} A	m kg	J_{mot} 10^{-4}kgm^2
	CMP71S	6.4	3.4	19.2	17	8.7	4.6	7	3.04
	CMP71M	9.4	5	30.8	26	13.7	7.3	8.4	4.08
	CMP71L	13.1	6.3	46.9	39	21	10.1	11.4	6.18
	CMP80S	13.4	6.9	42.1	33	18.7	9.5	12.8	8.78
2000	**CMP80M**	18.7	9.3	62.6	48	27	13.4	16.5	11.9
	CMP80L	27.5	12.5	107	72	44	20	21.4	18.1
	CMP100S	25.5	13.3	68.3	49	36	18.8	19.8	19.59
	CMP100M	31	14.7	108	69	47	22.3	24.8	26.49
	CMP100L	47	21.8	178.8	113	70	32.5	34.6	40.24
	CMP40S	0.5	1.2	1.9	6.1	-	-	1.3	0.1
	CMP40M	0.8	0.95	3.8	6.0	-	-	1.6	0.15
	CMP50S	1.3	0.96	5.2	5.1	1.7	1.25	2.3	0.42
	CMP50M	2.4	1.68	10.3	9.6	3.5	2.45	3.3	0.67
	CMP50L	3.3	2.2	15.4	13.6	4.8	3.2	4.1	0.92
	CMP63S	2.9	2.15	11.1	12.9	4	3	4.0	1.15
	CMP63M	5.3	3.6	21.4	21.6	7.5	5.1	5.7	1.92
	CMP63L	7.1	4.95	30.4	29.7	10.3	7.2	7.5	2.69
3000	**CMP71S**	6.4	4.9	19.2	25	8.7	6.7	7	3.04
	CMP71M	9.4	7.5	30.8	39	13.7	10.9	8.4	4.08
	CMP71L	13.1	9.4	46.9	58	21	15.1	11.4	6.18
	CMP80S	13.4	10	42.1	47	18.5	13.8	12.8	8.78
	CMP80M	18.7	13.4	62.6	69	27	19.3	16.5	11.9
	CMP80L	27.5	18.7	107	107	44	30	21.4	18.1
	CMP100S	25.5	19.6	68.3	73	36	27.5	19.8	19.34
	CMP100M	31	21.8	108	102	47	33	24.8	26.25
	CMP100L	47	32.3	178.8	167	70	48	34.6	40
	CMP40S	0.5	1.2	1.9	6.1	-	-	1.3	0.1
	CMP40M	0.8	0.95	3.8	6.0	-	-	1.6	0.15
	CMP50S	1.3	1.32	5.2	7.0	1.7	1.7	2.3	0.42
	CMP50M	2.4	2.3	10.3	13.1	3.5	3.35	3.3	0.67
	CMP50L	3.3	3.15	15.4	19.5	4.8	4.6	4.1	0.92
	CMP63S	2.9	3.05	11.1	18.3	4	4.2	4.0	1.15
	CMP63M	5.3	5.4	21.4	32.4	7.5	7.6	5.7	1.92
	CMP63L	7.1	6.9	30.4	41.4	10.3	10	7.5	2.69
4500	**CMP71S**	6.4	7.3	19.2	38	8.7	9.9	7	3.04
	CMP71M	9.4	10.9	30.8	57	13.7	15.9	8.4	4.08
	CMP71L	13.1	14.1	46.9	87	21	22.5	11.4	6.18
	CMP80S	13.4	15.3	42.1	73	18.5	21	12.8	8.78
	CMP80M	18.7	20.1	62.6	103	27	29	16.5	11.9
	CMP80L	27.5	27.8	107	159	44	44.5	21.4	18.1
	CMP100S	25.5	30	68.3	111	36	42.5	19.8	19.34
	CMP100M	31	33.1	108	154	-	-	24.8	26.25
	CMP100L	47	48.4	178.8	251	-	-	34.6	40

n_N min^{-1}	Motor	M_0 Nm	I_0 A	M_{pk} Nm	I_{max} A	M_{0VR} Nm	I_{0VR} A	m kg	J_{mot} $10^{-4}kgm^2$
6000	**CMP40S**	0.5	1.2	1.9	6.1	-	-	1.3	0.1
	CMP40M	0.8	1.1	3.8	6.9	-	-	1.6	0.15
	CMP50S	1.3	1.7	5.2	9.0	1.7	2.2	2.3	0.42
	CMP50M	2.4	3	10.3	17.1	3.5	4.4	3.3	0.67
	CMP50L	3.3	4.2	15.4	26	4.8	6.1	4.1	0.92
	CMP63S	2.9	3.9	11.1	23.4	4	5.4	4.0	1.15
	CMP63M	5.3	6.9	21.4	41.4	7.5	9.8	5.7	1.92
	CMP63L	7.1	9.3	30.4	55.8	10.3	13.5	7.5	2.69
	CMP71S	6.4	9.6	19.2	50	8.7	13.1	7	3.04
	CMP71M	9.4	14.7	30.8	76	13.7	21.5	8.4	4.08
	CMP71L	13.1	18.8	46.9	115	21	30	11.4	6.18
	CMP80S	13.4	20	42.1	95	18.5	27.5	12.8	8.78
	CMP80M	18.7	26.4	62.6	135	27	38	16.5	11.9
	CMP80L	27.5	37.6	107	215	-	-	21.4	18.1

n_N min^{-1}	Motor	L_1 mH	R_1 Ω	U_{p0} cold V	m_{bmot} kg	J_{bmot} $10^{-4}kgm^2$	M_{B1} Nm	M_{B2} Nm
2000	**CMP71S**	33.5	3.48	128	9	3.44	7	14
	CMP71M	21.5	1.87	127	10.4	4.5	14	7
	CMP71L	16.2	1.2	142	13.4	6.6	14	7
	CMP80S	15.3	1.1	133	16.8	10.04	16	31
	CMP80M	10.5	0.69	136	20.5	13.16	31	16
	CMP80L	7.6	0.44	149	24.4	19.36	31	16
	CMP100S	8.5	0.44	130	22.8	21.34	24	47
	CMP100M	6.6	0.3	141	27.8	28.25	47	24
	CMP100L	4.15	0.169	145	37.6	42.82	47	24
3000	**CMP40S**	23	11.94	27.5	1.7	0.13	0.95	-
	CMP40M	46	19.93	56	2.0	0.18	0.95	-
	CMP50S	71	22.49	86	2.9	0.48	3.1	4.3
	CMP50M	38.5	9.96	90	3.9	0.73	4.3	3.1
	CMP50L	30.5	7.42	98	4.7	0.98	4.3	3.1
	CMP63S	36.5	6.79	90	5.0	1.49	7	9.3
	CMP63M	22	3.56	100	6.7	2.26	9.3	7
	CMP63L	14.2	2.07	100	8.5	3.03	9.3	7
	CMP71S	15.7	1.48	87.5	9	3.44	7	14
	CMP71M	9.7	0.81	85	10.4	4.5	14	7
	CMP71L	7.3	0.56	96	13.4	6.6	14	7
	CMP80S	7.2	0.54	91	16.8	10.04	16	31
	CMP80M	5	0.345	94	20.5	13.16	31	16
	CMP80L	3.35	0.21	99	24.4	19.36	31	16
	CMP100S	3.9	0.215	88	22.8	21.34	24	47
	CMP100M	3.05	0.142	95.5	27.8	28.25	47	24
	CMP100L	1.9	0.081	98	37.6	42	47	24
4500	**CMP40S**	23	11.94	27.5	1.7	0.13	0.95	-
	CMP40M	46	19.93	56	2.0	0.18	0.95	-
	CMP50S	37	11.61	62	2.9	0.48	3.1	4.3
	CMP50M	20.5	5.28	66	3.9	0.73	4.3	3.1
	CMP50L	14.6	3.57	68	4.7	0.98	4.3	3.1
	CMP63S	18.3	3.34	64	5.0	1.49	7	9.3
	CMP63M	9.8	1.48	67	6.7	2.26	9.3	7
	CMP63L	7.2	1.07	71	8.5	3.03	9.3	7
	CMP71S	7.1	0.72	59	9	3.44	7	14
	CMP71M	4.55	0.385	58	10.4	4.5	14	7
	CMP71L	3.25	0.24	64	13.4	6.6	14	7
	CMP80S	3.05	0.22	59	16.8	10.04	16	31
	CMP80M	2.25	0.148	63	20.5	13.16	31	16
	CMP80L	1.54	0.085	67	24.4	19.36	31	16
	CMP100S	1.68	0.086	58	22.8	21.34	24	47
	CMP100M	1.32	0.058	63	27.8	28.25	47	24
	CMP100L	0.84	0.038	65	37.6	42.82	47	24

n_N min^{-1}	Motor	L_1 mH	R_1 Ω	U_{p0} cold V	m_{bmot} kg	J_{bmot} $10^{-4}kgm^2$	M_{B1} Nm	M_{B2} Nm
6000	**CMP40S**	23	11.94	27.5	1.7	0.13	0.95	-
	CMP40M	34	14.95	48.5	2.0	0.18	0.95	-
	CMP50S	22.5	7.11	48.5	2.9	0.48	3.1	4.3
	CMP50M	12	3.21	50.5	3.9	0.73	4.3	3.1
	CMP50L	8.2	1.91	51	4.7	0.98	4.3	3.1
	CMP63S	11.2	2.1	50	5.0	1.49	7	9.3
	CMP63M	5.9	0.92	52	6.7	2.26	9.3	7
	CMP63L	4	0.62	53	8.5	3.03	9.3	7
	CMP71S	4.15	0.395	45	9	3.44	7	14
	CMP71M	2.55	0.205	43.5	10.4	4.5	14	7
	CMP71L	1.84	0.145	48	13.4	6.6	14	7
	CMP80S	1.8	0.136	46	-	-	-	-
	CMP80M	1.3	0.087	48	-	-	-	-
	CMP80L	0.84	0.051	50	-	-	-	-

16.2 Technical data of CMPZ motors

Synchronous servomotors with 400 V system voltage

n_N	Motor	M_0	I_0	M_{pk}	I_{max}	M_{0VR}	I_{0VR}	m	J_{mot}
min^{-1}		Nm	A	Nm	A	Nm	A	kg	$10^{-4}kgm^2$
2000	**CMPZ71S**	6.4	3.4	19.2	17	8.7	4.6	8.6	9.32
	CMPZ71M	9.4	5	30.8	26	13.7	7.3	10	10.37
	CMPZ71L	13.1	6.3	46.9	39	21	10.1	13	12.47
	CMPZ80S	13.4	6.9	42.1	33	18.7	9.5	15.8	27.18
	CMPZ80M	18.7	9.3	62.6	48	27	13.4	19.5	30.3
	CMPZ80L	27.5	12.5	107	72	44	20	24.4	36.51
	CMPZ100S	25.5	13.3	68.3	49	36	18.8	24.2	79.76
	CMPZ100M	31	14.7	108	69	47	22.3	29.2	86.66
	CMPZ100L	47	21.8	178.8	113	70	32.5	39	100.41
3000	**CMPZ71S**	6.4	4.9	19.2	25	8.7	6.7	8.6	9.32
	CMPZ71M	9.4	7.5	30.8	39	13.7	10.9	10	10.37
	CMPZ71L	13.1	9.4	46.9	58	21	15.1	13	12.47
	CMPZ80S	13.4	10	42.1	47	18.5	13.8	15.8	27.18
	CMPZ80M	18.7	13.4	62.6	69	27	19.3	19.5	30.3
	CMPZ80L	27.5	18.7	107	107	44	30	24.4	36.51
	CMPZ100S	25.5	19.6	68.3	73	36	27.5	24.2	79.76
	CMPZ100M	31	21.8	108	102	47	33	29.2	86.66
	CMPZ100L	47	32.3	178.8	167	70	48	39	100.41
4500	**CMPZ71S**	6.4	7.3	19.2	38	8.7	9.9	8.6	9.32
	CMPZ71M	9.4	10.9	30.8	57	13.7	15.9	10	10.37
	CMPZ71L	13.1	14.1	46.9	87	21	22.5	13	12.47
	CMPZ80S	13.4	15.3	42.1	73	18.5	21	15.8	27.18
	CMPZ80M	18.7	20.1	62.6	103	27	29	19.5	30.3
	CMPZ80L	27.5	27.8	107	159	44	44.5	24.4	36.51
	CMPZ100S	25.5	30	68.3	111	36	42.5	24.2	79.76
	CMPZ100M	31	33.1	108	154	-	-	29.2	86.66
	CMPZ100L	47	48.4	178.8	251	-	-	39	100.41
6000	**CMPZ71S**	6.4	9.6	19.2	50	8.7	13.1	8.6	9.32
	CMPZ71M	9.4	14.7	30.8	76	13.7	21.5	10	10.37
	CMPZ71L	13.1	18.8	46.9	115	21	30	13	12.47
	CMPZ80S	13.4	20	42.1	95	18.5	27.5	15.8	27.18
	CMPZ80M	18.7	26.4	62.6	135	27	38	19.5	30.3
	CMPZ80L	27.5	37.6	107	215	-	-	24.4	36.51

n_N	Motor	L_1	R_1	U_{p0} cold	$\Delta LB^{1)}$	m_{bmot}	J_{bmot}	M_{B1}	M_{B2}	$\Delta LBS^{2)}$
rpm		mH	Ω	V	mm	kg	$10^{-4}kgm^2$	Nm		mm
2000	**CMPZ71S**	33.5	3.48	128	64.8	11.2	11.04	14	10	56.2
	CMPZ71M	21.5	1.87	127	64.8	12.6	12.09	20	14	56.2
	CMPZ71L	16.2	1.2	142	64.8	15.6	14.19	20	14	56.2
	CMPZ80S	15.3	1.1	133	77.5	20.8	30.95	28	20	60.5
	CMPZ80M	10.5	0.69	136	77.5	24.5	34.07	40	28	60.5
	CMPZ80L	7.6	0.44	149	77.5	29.4	40.28	40	28	60.5
	CMPZ100S	8.5	0.44	130	96.2	34.7	84.19	55	40	60.8
	CMPZ100M	6.6	0.3	141	96.2	39.7	91.1	80	55	60.8
	CMPZ100L	4.15	0.169	145	96.2	49.5	104.85	80	55	60.8
3000	**CMPZ71S**	15.7	1.48	87.5	64.8	11.2	11.04	14	10	56.2
	CMPZ71M	9.7	0.81	85	64.8	12.6	12.09	20	14	56.2
	CMPZ71L	7.3	0.56	96	64.8	15.6	14.19	20	14	56.2
	CMPZ80S	7.2	0.54	91	77.5	20.8	30.95	28	20	60.5
	CMPZ80M	5	0.345	94	77.5	24.5	34.07	40	28	60.5
	CMPZ80L	3.35	0.21	99	77.5	29.4	40.28	40	28	60.5
	CMPZ100S	3.9	0.215	88	96.2	34.7	84.19	55	40	60.8
	CMPZ100M	3.05	0.142	95.5	96.2	39.7	91.1	80	55	60.8
	CMPZ100L	1.9	0.081	98	96.2	49.5	104.85	80	55	60.8
4500	**CMPZ71S**	7.1	0.72	59	64.8	11.2	11.04	14	10	56.2
	CMPZ71M	4.55	0.385	58	64.8	12.6	12.09	20	14	56.2
	CMPZ71L	3.25	0.24	64	64.8	15.6	14.19	20	14	56.2
	CMPZ80S	3.05	0.22	59	77.5	20.8	30.95	28	20	60.5
	CMPZ80M	2.25	0.148	63	77.5	24.5	34.07	40	28	60.5
	CMPZ80L	1.54	0.085	67	77.5	29.4	40.28	40	28	60.5
	CMPZ100S	1.68	0.086	58	96.2	34.7	84.19	55	40	60.8
	CMPZ100M	1.32	0.058	63	96.2	39.7	91.1	80	55	60.8
	CMPZ100L	0.84	0.038	65	96.2	49.5	104.85	80	55	60.8
6000	**CMPZ71S**	4.15	0.395	45	64.8	11.2	11.04	14	10	56.2
	CMPZ71M	2.55	0.205	43.5	64.8	12.6	12.09	20	14	56.2
	CMPZ71L	1.84	0.145	48	64.8	15.6	14.19	20	14	56.2
	CMPZ80S	1.8	0.136	46	77.5	-	-	-	-	60.5
	CMPZ80M	1.3	0.087	48	77.5	-	-	-	-	60.5
	CMPZ80L	0.84	0.051	50	77.5	-	-	-	-	60.5

1) Length difference between CMPZ.. motor and the respective CMP.. motor

2) Length difference between CMPZ../BY brakemotor and the respective CMP../BP brakemotor

17 Abbreviation Key and Index

17.1 Abbreviation key

For a detailed list of abbreviations used, refer to chapter 3 "Project Planning Notes for Servo Gearmotors".

17.2 Index

A

Abbreviation key 42, 527
Additional documentation 9, 41
Ambient temperature
BS.F, PS.F, PS.C gear units 19
R, F, K, S, W gear units 16
Assembly of gear units with hollow shaft and key 110
ATEX, explosion protection 21
ATEX, other documentation 21
Available torque arms 124

B

Brakemotors 11
Breather valves 146

C

Cable entry 74
Cable entry of CMP motors 74
Chamfers of flange block gear units 148
Change of mounting position 70
Changing the mounting position 70
Churning losses 49, 77
Coating 11
Condition monitoring
Technical data 130
Connecting CMP motors with terminal box 75
Content of this publication 9
Copyright 10
Corrosion protection 12
Covers, fixed 128

D

Data for drive and gear unit selection 42
Definition of force application for BS.F, PS.F, PS.C gear units 54
Definition of sides A and B for the output shafts 72
Depiction of mounting positions 76
Design notes 109
Diagnostic unit
DUV10A vibration sensor 132
Oil aging sensor DUO10A 130
Dimension sheets
Tolerances 145
Dimension sheets, flanges 146
Dimension sheets, front and foot-end mounting of BS.F..B 148
Dimension sheets, hollow shafats 146
Dimension sheets, multiple-spline shafts 146
Dimension sheets, notes 145
Dimension sheets, rubber buffers for FA/FH/FV/FT 147
Dimension sheets, shaft ends 145
Dimension sheets, shrink disk connection 146
Dimension sheets, splined shaft 147
Dimension sheets, tolerances and chamfers of flange block gear units 148
Direction of rotation of output shaft 69, 73
Disassembly of gear units with hollow shaft and key 110

E

Efficiency of R, F, K, S, W gear units 48
Explosion protection according to ATEX 21
Extended storage 14
Eyebolts 146

F

Fastening the gear unit 124
Fill quantities
BS.F 141
BS.F.. 141
PS.F 142, 143
R, F, K, S, W gear units 134, 137
Fill quantities PSF 142
Flange block shaft 116
Flange contours
FAF.., KAF.., SAF.. and WAF.. 127
FF.., KF.., SF.. and WF.. 126
Flange contours of RF.. and R..F 125
Force application, definition 51
Front-end mounting of BS.F..B gear units 148

G

Gear units
Extended storage 14
Gear units with flange block shaft 116
Gear units with hollow shaft 114
Gearmotor dimensions 148
General information on mounting positions
BS.F, PS.F, PS.C gear units 71
R, F, K, S, W gear units 68
General notes
BS.F, PS.F, PS.C gear units 19
R, F, K, S, W gear units 16

H

Helical gear unit
Type designation 22
Helical-bevel gear unit
Type designation 23
Helical-bevel gear units
Type designation of BSF 34
Helical-bevel gearmotors 28
Helical-worm gear unit
Type designation 23
Higher permitted overhung loads
BS.F, PS.F, PS.C gear units 54
Hollow shaft 114
Hollow shaft, shouldered with shrink disk 117

I

Important notes on selection tables and dimension sheets 144
Installation altitude 16, 19
Installation of gear units with hollow shaft and key
Supplied fastening parts 110
International markets 11

K

Key to the mounting position sheets 76
Kombinationstabellen
BS.F..CMP / CM 417
F..CMP / CM 237
K..CMP / CM 310
PS.C..CMP / CM 505
PSBF..CMP / CM 460
PSF..CMP / CM 460
R..CMP / CM 150
S..CMP / CM 372
W..CMP / CM 401
KS corrosion protection 12

L

Lifting eyes 146
Lubricant fill quantities
PS.F.. 142
Lubricant table 135, 136
Lubricants
General information 134
Lubricant table 136

M

Main technical data of servomotors
CMP motors 520
CMPZ motors 524
Key 519
Main technical data of the servomotors 519
Maßblätter
BS.F..CMP / CM 417
F..CMP / CM 237
K..CMP / CM 310
PS.C..CMP / CM 505
PSBF..CMP / CM 460
PSF..CMP / CM 460
R..CMP / CM 150
S..CMP / CM 372
W..CMP / CM 401
Mounting positions
Helical gearmotors 78
Helical-bevel gearmotors 86
Helical-bevel servo gearmotors 98
Helical-worm gearmotors 89
Parallel shaft helical gearmotors 83
Planetary servo gearmotors 107
SPIROPLAN® 95
Mounting positions of BSF, PSF, PSC servo gear units 71
Mounting positions of gear units 68

N

Nameplate 39
NOCO® 14
Noise levels 17, 19
Notes on dimension sheets 145
Notes on the selection tables 144

O

Oil aging sensor 130
Technical data and part numbers 130
Operating notes 109
Options
BS.F, PSF, PSC gear units 34
BSF, PSF, PSC gear units 34
R, F, K, S, W gear units 22
Order information
BS.F, PS.F, PS.C gear units 72
R, F, K, S, W gear units 69
Order information for servomotors 74
OS surface protection
Definition 13
NOCO® 14
Output shafts, direction of rotation 73
Overhung and axial loads of R, F, K, S, W gear units 50
Overhung load calculation for BS.F, PS.F, PS.C gear units 53
Overhung load conversion
BS.F, PS.F, PS.C gear units 55
Gear unit constants
BS.F, PS.F, PS.C gear units 56
R, F, K, S, W gear units 52
Overhung load conversion for off-center force application 51
Overview of gearmotors 40
Overview of types and type designation
BSF helical-bevel gear units 34
Planetary gear units PSC 34
PSF planetary gear units 34
Overview of types and unit designation 22
Helical gearmotors 25

P

Parallel shaft helical gear unit
Type designation 22
Permitted axial load 51
Permitted axial loads for BS.F, PS.F, PS.C gear units 54
Permitted overhung load
BS.F, PS.F, PS.C gear units 54
R, F, K, S, W gear units 50

Permitted overhung load for R, F, K, S, W gear units 50
Permitted overhung loads
R, F, K, S, W gear units 50
Planetary gear units
Type designation of PSF 34
Type designation PSC 34
Plug connectors of CMP servomotors 74
Position of output end in right-angle gear units ...70
Position of output flange 69
Position of output shaft 69
Position of the arm 147
Product description 11
BS.F, PS.F, PS.C gear units 19
Input components 18
R, F, K, S, W gear units 16
SPIROPLAN® 18
Swing base 18
Product groups 7
Product names and trademarks 10
Project planning example 57
Project planning notes 41
BS.F, PS.F, PS.C gear units 53
Churning losses of R, F, K, S, W gear units 49
Efficiency levels of BS.F, PS.F, PS.C gear units 53
R, F, K, S, W gear units 48
Run-in phase of R, F, K, S, W gear units 49
Project planning of gear units
Off-center force application, overhung load conversion 51
Project planning procedure 44
Part 1, servo gear units 44
Part 2, servo gear units 45
Part 3, servomotors 46
Part 4, servomotors 47
PS 34

R

Reduced backlash gear units 17, 109
Reduced backlash version
Reduced backlash 17
Rolling bearing greases 134
Rubber buffers for FA/FH/FV/FT 147
Run-in phase of R, F, K, S, W gear units 49

S

Selection tables and dimension sheets, important notes 144
Self-locking helical-worm or SPIROPLAN® gear units 48
SEW-EURODRIVE
Group of companies 6
Products 7
Systems 7
Shaft heights 145
Shouldered hollow shaft with shrink disk 117
Shrink disk connection 146
Special protection measures 13
SPIROPLAN® 24
SPIROPLAN® types 32
Splined shaft 147
Storage conditions 15
Surface protection 12

T

Terminal box, connecting CMP motor 75
Tolerances
Flange block gear units 148
Flanges 146
Hollow shafts 146
Multiple-spline shafts 146
Shaft ends 145
TorqLOC® 115
TorqLOC® hollow shaft mounting system 115
Torque arm 147
Torque arms 124
Type
reduced backlash 109
Type designation 24
BSF helical-bevel gear units 34
Condition monitoring 24
Helical-bevel gear unit 23
Helical-worm gear unit 23
Options 24
Parallel shaft helical gear unit 22
PSC planetary gear units 34
PSF planetary gear units 34
Type designation of servo gearmotors 38

Types 25, 26, 30, 35, 37
BS.F, PSF, PSC gear units 34
Helical-bevel gearmotors 28
Helical-bevel gearmotors BS.F 35
Helical-worm gearmotors 30
Parallel shaft helical gearmotors 26
Planetary gearmotors PS.C 37
Planetary gearmotors PS.F 37
R, F, K, S, W gear units 22
SPIROPLAN® types 32
Helical gearmotors 25

U

Unit designation
Helical gear unit 22

V

Vibration sensor 130
Technical data and part numbers 132

W

Weight specifications 11



Address Directory

Germany			
Headquarters **Production** **Sales**	**Bruchsal**	SEW-EURODRIVE GmbH & Co KG Ernst-Blickle-Straße 42 D-76646 Bruchsal P.O. Box Postfach 3023 • D-76642 Bruchsal	Tel. +49 7251 75-0 Fax +49 7251 75-1970 http://www.sew-eurodrive.de sew@sew-eurodrive.de
Production	**Graben**	SEW-EURODRIVE GmbH & Co KG Ernst-Blickle-Straße 1 D-76676 Graben-Neudorf P.O. Box Postfach 1220 • D-76671 Graben-Neudorf	Tel. +49 7251 75-0 Fax +49 7251 75-2970
	Östringen	SEW-EURODRIVE Östringen GmbH Franz-Gurk-Straße 2 D-76684 Östringen P.O. Box Postfach 1174 • D-76677 Östringen	Tel. +49 7253 92540 Fax +49 7253 925490 oestringen@sew-eurodrive.de
Service Competence Center	**Central**	SEW-EURODRIVE GmbH & Co KG Ernst-Blickle-Straße 1 D-76676 Graben-Neudorf	Tel. +49 7251 75-1710 Fax +49 7251 75-1711 sc-mitte@sew-eurodrive.de
	North	SEW-EURODRIVE GmbH & Co KG Alte Ricklinger Straße 40-42 D-30823 Garbsen (near Hannover)	Tel. +49 5137 8798-30 Fax +49 5137 8798-55 sc-nord@sew-eurodrive.de
	East	SEW-EURODRIVE GmbH & Co KG Dänkritzer Weg 1 D-08393 Meerane (near Zwickau)	Tel. +49 3764 7606-0 Fax +49 3764 7606-30 sc-ost@sew-eurodrive.de
	South	SEW-EURODRIVE GmbH & Co KG Domagkstraße 5 D-85551 Kirchheim (near München)	Tel. +49 89 909552-10 Fax +49 89 909552-50 sc-sued@sew-eurodrive.de
	West	SEW-EURODRIVE GmbH & Co KG Siemensstraße 1 D-40764 Langenfeld (near Düsseldorf)	Tel. +49 2173 8507-30 Fax +49 2173 8507-55 sc-west@sew-eurodrive.de
	Electronics	SEW-EURODRIVE GmbH & Co KG Ernst-Blickle-Straße 42 D-76646 Bruchsal	Tel. +49 7251 75-1780 Fax +49 7251 75-1769 sc-elektronik@sew-eurodrive.de
	Drive Service Hotline / 24 Hour Service		+49 180 5 SEWHELP +49 180 5 7394357
Technical Offices	**Augsburg**	SEW-EURODRIVE GmbH & Co KG August-Wessels-Straße 27 D-86156 Augsburg	Tel. +49 821 22779-10 Fax +49 821 22779-50 tb-augsburg@sew-eurodrive.de
	Berlin	SEW-EURODRIVE GmbH & Co KG Lilienthalstraße 3a D-12529 Schönefeld	Tel. +49 306331131-30 Fax +49 306331131-36 tb-berlin@sew-eurodrive.de
	Bodensee	SEW-EURODRIVE GmbH & Co KG Burgbergring 91 D-88662 Überlingen	Tel. +49 7551 9226-30 Fax +49 7551 9226-56 tb-bodensee@sew-eurodrive.de
	Bremen	SEW-EURODRIVE GmbH & Co KG Bornstr.19 ... 22 D-28195 Bremen	Tel. +49 421 33918-10 Fax +49 421 33918-22 tb-bremen@sew-eurodrive.de
	Dortmund	SEW-EURODRIVE GmbH & Co KG Hildastraße 10 D-44145 Dortmund	Tel. +49 231 912050-10 Fax +49 231 912050-20 tb-dortmund@sew-eurodrive.de
	Dresden	SEW-EURODRIVE GmbH & Co KG Hauptstraße 32 D-01445 Radebeul	Tel. +49 351 26338-0 Fax +49 351 26338-38 tb-dresden@sew-eurodrive.de

Germany			
	Erfurt	SEW-EURODRIVE GmbH & Co KG Dubliner Straße 12 D-99091 Erfurt	Tel. +49 361 21709-70 Fax +49 361 21709-79 tb-erfurt@sew-eurodrive.de
	Güstrow	SEW-EURODRIVE GmbH & Co KG Am Gewerbegrund 3 D-18273 Güstrow P.O. Box Postfach 1216 • D-18262 Güstrow	Tel. +49 3843 8557-80 Fax +49 3843 8557-88 tb-guestrow@sew-eurodrive.de
	Hamburg	SEW-EURODRIVE GmbH & Co KG Bramfelder Straße 119 D-22305 Hamburg	Tel. +49 40 298109-60 Fax +49 40 298109-70 tb-hamburg@sew-eurodrive.de
	Hannover/ Garbsen	SEW-EURODRIVE GmbH & Co KG Alte Ricklinger Str.40-42 D-30823 Garbsen P.O. Box Postfach 1104 53 • D-30804 Garbsen	Tel. +49 5137 8798-10 Fax +49 5137 8798-50 tb-hannover@sew-eurodrive.de
	Heilbronn	SEW-EURODRIVE GmbH & Co KG Zeppelinstraße 7 D-74357 Bönnigheim	Tel. +49 7143 8738-0 Fax +49 7143 8738-25 tb-heilbronn@sew-eurodrive.de
	Herford	SEW-EURODRIVE GmbH & Co KG Radewiger Straße 21 D-32052 Herford P.O. Box Postfach 4108 • D-32025 Herford	Tel. +49 5221 9141-0 Fax +49 5221 9141-20 tb-herford@sew-eurodrive.de
	Karlsruhe	SEW-EURODRIVE GmbH & Co KG Ettlinger Weg 2 D-76467 Bietigheim P.O. Box Postfach 43 • D-76463 Bietigheim	Tel. +49 7245 9190-10 Fax +49 7245 9190-20 tb-karlsruhe@sew-eurodrive.de
	Kassel	SEW-EURODRIVE GmbH & Co KG Lange Straße 14 D-34253 Lohfelden	Tel. +49 561 95144-80 Fax +49 561 95144-90 tb-kassel@sew-eurodrive.de
	Koblenz	SEW-EURODRIVE GmbH & Co KG Bahnstraße 17a D-56743 Mendig	Tel. +49 2652 9713-30 Fax +49 2652 9713-40 tb-koblenz@sew-eurodrive.de
	Lahr	SEW-EURODRIVE GmbH & Co KG Europastraße 3/1 D-77933 Lahr / Schwarzwald	Tel. +49 7821 90999-60 Fax +49 7821 90999-79 tb-lahr@sew-eurodrive.de
	Langenfeld	SEW-EURODRIVE GmbH & Co KG Siemensstraße 1 D-40764 Langenfeld	Tel. +49 2173 8507-10 Fax +49 2173 8507-50 tb-langenfeld@sew-eurodrive.de
	Magdeburg	SEW-EURODRIVE GmbH & Co KG Breiteweg 53 D-39179 Barleben	Tel. +49 39203 7577-1 Fax +49 39203 7577-9 tb-magdeburg@sew-eurodrive.de
	Mannheim	SEW-EURODRIVE GmbH & Co KG Besselstraße 26 D-68219 Mannheim	Tel. +49 621 71683-10 Fax +49 621 71683-22 tb-mannheim@sew-eurodrive.de
	München	SEW-EURODRIVE GmbH & Co KG Domagkstraße 5 D-85551 Kirchheim	Tel. +49 89 90955-110 Fax +49 89 90955-150 tb-muenchen@sew-eurodrive.de
	Münster	SEW-EURODRIVE GmbH & Co KG Hafenplatz 4 D-48155 Münster	Tel. +49 251 41475-11 Fax +49 251 41475-50 tb-muenster@sew-eurodrive.de
	Nürnberg	SEW-EURODRIVE GmbH & Co KG Plattenäckerweg 6 D-90455 Nürnberg	Tel. +49 911 98884-50 Fax +49 911 98884-60 tb-nuernberg@sew-eurodrive.de

Germany			
	Regensburg	SEW-EURODRIVE GmbH & Co KG Im Gewerbepark A15 D-93059 Regensburg	Tel. +49 941 46668-68 Fax +49 941 46668-66 tb-regensburg@sew-eurodrive.de
	Rhein-Main	SEW-EURODRIVE GmbH & Co KG Niederstedter Weg 5 D-61348 Bad Homburg	Tel. +49 6172 9617-0 Fax +49 6172 9617-50 tb-rheinmain@sew-eurodrive.de
	Stuttgart	SEW-EURODRIVE GmbH & Co KG Friedrich-List-Straße 46 D-70771 Leinfelden-Echterdingen	Tel. +49 711 16072-0 Fax +49 711 16072-72 tb-stuttgart@sew-eurodrive.de
	Ulm	SEW-EURODRIVE GmbH & Co KG Dieselstraße 14 D-89160 Dornstadt	Tel. +49 7348 9885-0 Fax +49 7348 9885-90 tb-ulm@sew-eurodrive.de
	Würzburg	SEW-EURODRIVE GmbH & Co KG Nürnbergerstraße 118 D-97076 Würzburg-Lengfeld	Tel. +49 931 27886-60 Fax +49 931 27886-66 tb-wuerzburg@sew-eurodrive.de
	Zwickau / Meerane	SEW-EURODRIVE GmbH & Co KG Dänkritzer Weg1 D-08393 Meerane	Tel. +49 3764 7606-0 Fax +49 3764 7606-20 tb-zwickau@sew-eurodrive.de

France			
Production **Sales** **Service**	**Haguenau**	SEW-USOCOME 48-54 route de Soufflenheim B. P. 20185 F-67506 Haguenau Cedex	Tel. +33 3 88 73 67 00 Fax +33 3 88 73 66 00 http://www.usocome.com sew@usocome.com
Production	**Forbach**	SEW-USOCOME Zone industrielle Technopôle Forbach Sud B. P. 30269 F-57604 Forbach Cedex	Tel. +33 3 87 29 38 00
Assembly **Sales** **Service**	**Bordeaux**	SEW-USOCOME Parc d'activités de Magellan 62 avenue de Magellan - B. P. 182 F-33607 Pessac Cedex	Tel. +33 5 57 26 39 00 Fax +33 5 57 26 39 09
	Lyon	SEW-USOCOME Parc d'affaires Roosevelt Rue Jacques Tati F-69120 Vaulx en Velin	Tel. +33 4 72 15 37 00 Fax +33 4 72 15 37 15
	Nantes	SEW-USOCOME Parc d'activités de la forêt 4 rue des Fontenelles F-44140 Le Bignon	Tel. +33 2 40 78 42 00 Fax +33 2 40 78 42 20
	Paris	SEW-USOCOME Zone industrielle 2 rue Denis Papin F-77390 Verneuil l'Etang	Tel. +33 1 64 42 40 80 Fax +33 1 64 42 40 88
Technical Offices	**Alsace**	SEW-USOCOME 1 rue Auguste Gasser F-68360 Soultz	Tel. +33 3 89 74 51 62 Fax +33 3 89 76 58 71
	Aquitaine / Charentes	SEW-USOCOME Parc d'activités de Magellan 62 avenue de Magellan B. P. 182 F-33607 Pessac Cedex	Tel. +33 5 57 26 39 00 Fax +33 5 57 26 39 09
	Auvergne / Limousin	SEW-USOCOME Farges F-19600 Chasteaux	Tel. +33 5 55 20 12 10 Fax +33 5 55 20 12 11

France			
	Lower Normandy	SEW-USOCOME 5 rue de la Limare F-14250 Brouay	Tel. +33 2 31 37 92 86 Fax +33 2 31 74 68 15
	Bourgogne	SEW-USOCOME 10 rue de la poste F-71350 Saint Loup Géanges	Tel. +33 3 85 49 92 18 Fax +33 3 85 49 92 19
	Brittany	SEW-USOCOME Parc d'activités de la forêt 4 rue des Fontenelles F-44140 Le Bignon	Tel. +33 2 28 21 12 52 Fax +33 2 28 21 12 84
	Centre / Poitou	SEW-USOCOME Parc d'activités de la forêt 4 rue des Fontenelles F-44140 Le Bignon	Tel. +33 2 40 78 42 11 Fax +33 2 40 78 42 20
	Champagne-Ardenne	SEW-USOCOME Impasse des Ouises F-10120 Saint André les Vergers	Tel. +33 3 25 79 63 24 Fax +33 3 25 79 63 25
	Franche-Comté	SEW-USOCOME 5 route de Besançon Maison B F-25870 Devecey	Tel. +33 3 81 60 20 47 Fax +33 3 81 87 75 93
	Île-de-France East / Aisne	SEW-USOCOME 45 rue des Cinelles F-77700 Bailly Romainvilliers	Tel. +33 1 64 17 02 47 Fax +33 1 64 17 66 49
	Île-de-France North / Picardy	SEW-USOCOME 25bis rue Kléber F-92300 Levallois Perret	Tel. +33 1 41 05 92 74 Fax +33 1 41 05 92 75
	Île-de-France South	SEW-USOCOME 6 chemin des bergers Lieu-dit Marchais F-91410 Roinville sous Dourdan	Tel. +33 1 60 81 10 56 Fax +33 1 60 81 10 57
	Lorraine / Alsace North	SEW-USOCOME 1 rue de la forêt F-54250 Champigneulles	Tel. +33 3 83 96 28 04 Fax +33 3 83 96 28 07
	Midi-Pyrénées / Roussillon	SEW-USOCOME 179 route de Grazac F-31190 Caujac	Tel. +33 5 61 08 15 85 Fax +33 5 61 08 16 44
	Nord-Pas-de-Calais	SEW-USOCOME 209 route d'Hesdigneul F-62360 Hesdin l'Abbé	Tel. +33 3 21 10 86 86 Fax +33 3 21 10 86 87
	Paris / Île-de-France West	SEW-USOCOME 42 avenue Jean Jaurès F-78580 Maule	Tel. +33 1 30 90 89 86 Fax +33 1 30 90 93 15
	Pays de la Loire	SEW-USOCOME Parc d'activités de la forêt 4 rue des Fontenelles F-44140 Le Bignon	Tel. +33 2 51 70 54 04 Fax +33 2 51 70 54 05
	Provence-Alpes-Côte d'Azur	SEW-USOCOME Résidence Les Hespérides Bât. B2 67 boulevard des Alpes F-13012 Marseille	Tel. +33 4 91 18 00 11 Fax +33 4 91 18 00 12
	Rhône-Alpes East	SEW-USOCOME Montée de la Garenne F-26750 Génissieux	Tel. +33 4 75 05 65 95 Fax +33 4 75 05 65 96



France			
	Rhône-Alpes North	SEW-USOCOME Parc d'affaires Roosevelt Rue Jacques Tati F-69120 Vaulx en Velin	Tel. +33 4 72 15 37 03 Fax +33 4 72 15 37 15
	Rhône-Alpes West	SEW-USOCOME Parc d'affaires Roosevelt Rue Jacques Tati F-69120 Vaulx en Velin	Tel. +33 4 72 15 37 04 Fax +33 4 72 15 37 15

Algeria			
Sales	**Alger**	REDUCOM Sarl 16, rue des Frères Zaghnoune Bellevue 16200 El Harrach Alger	Tel. +213 21 8214-91 Fax +213 21 8222-84 sew-algeria@reducom-dz.com http://www.reducom-dz.com

Argentina			
Assembly **Sales** **Service**	**Buenos Aires**	SEW EURODRIVE ARGENTINA S.A. Centro Industrial Garin, Lote 35 Ruta Panamericana Km 37,5 1619 Garin	Tel. +54 3327 4572-84 Fax +54 3327 4572-21 sewar@sew-eurodrive.com.ar http://www.sew-eurodrive.com.ar

Australia			
Assembly **Sales** **Service**	**Melbourne**	SEW-EURODRIVE PTY. LTD. 27 Beverage Drive Tullamarine, Victoria 3043	Tel. +61 3 9933-1000 Fax +61 3 9933-1003 http://www.sew-eurodrive.com.au enquires@sew-eurodrive.com.au
	Sydney	SEW-EURODRIVE PTY. LTD. 9, Sleigh Place, Wetherill Park New South Wales, 2164	Tel. +61 2 9725-9900 Fax +61 2 9725-9905 enquires@sew-eurodrive.com.au
Sales **Service**	**Adelaide**	SEW-EURODRIVE PTY. LTD. 9C Park Way Mawson Lakes, SA 5095	Tel. +61 8 8161 4000 Fax +61 8 8161 4002 enquires@sew-eurodrive.com.au
	Brisbane	SEW-EURODRIVE PTY.LTD. 1 /34 Collinsvale St Rocklea, Queensland, 4106	Tel. +61 7 3276 5100 Fax +61 7 3276 5102 enquires@sew-eurodrive.com.au
	Perth	SEW-EURODRIVE PTY. LTD. 10 Colin Jamieson Drive Welshpool, WA 6106	Tel. +61 8 9251-4900 Fax +61 8 9251-4903 enquires@sew-eurodrive.com.au
Technical Office	**Townsville**	SEW-EURODRIVE PTY. LTD. 12 Leyland Street Garbutt, QLD 4814	Tel. +61 7 4779 4333 Fax +61 7 4779 5333 enquires@sew-eurodrive.com.au

Austria			
Assembly **Sales** **Service**	**Wien**	SEW-EURODRIVE Ges.m.b.H. Richard-Strauss-Strasse 24 A-1230 Wien	Tel. +43 1 617 55 00-0 Fax +43 1 617 55 00-30 http://www.sew-eurodrive.at sew@sew-eurodrive.at
Technical Offices	**Linz**	SEW-EURODRIVE Ges.m.b.H. Reuchlinstr. 6/3 A-4020 Linz	Tel. +43 732 655 109-0 Fax +43 732 655 109-20 tb-linz@sew-eurodrive.at
	Graz	SEW-EURODRIVE Ges.m.b.H. Grabenstraße 231 A-8045 Graz	Tel. +43 316 685 756-0 Fax +43 316 685 755 tb-graz@sew-eurodrive.at
	Dornbirn	SEW-EURODRIVE Ges.m.b.H. Lustenauerstraße 27/1 A-6850 Dornbirn	Tel. +43 5572 3725 99-0 Fax +43 5572 3725 99-20 tb-dornbirn@sew-eurodrive.at

Bangladesh			
Sales	**Dhaka**	Jainex Industrial and Engineering Ltd B 12 Apon Nibash East Nasirabad Bangladesh	Tel. +880 1713103502 Fax +880 31 613041 jainexbd@onlinectg.net

Belarus			
Sales	**Minsk**	SEW-EURODRIVE BY RybalkoStr. 26 BY-220033 Minsk	Tel.+375 (17) 298 38 50 Fax +375 (17) 29838 50 sales@sew.by

Belgium			
Assembly **Sales** **Service**	**Brussels**	**SEW Caron-Vector** Avenue Eiffel 5 BE-1300 Wavre	Tel. +32 10 231-311 Fax +32 10 231-336 http://www.sew-eurodrive.be info@sew-eurodrive.be
Service Competence Center	**Industrial Gears**	**SEW Caron-Vector** Rue de Parc Industriel, 31 BE-6900 Marche-en-Famenne	Tel. +32 84 219-878 Fax +32 84 219-879 http://www.sew-eurodrive.be service-wallonie@sew-eurodrive.be
	Antwerp	**SEW Caron-Vector** Glasstraat, 19 BE-2170 Merksem	Tel. +32 3 64 19 333 Fax +32 3 64 19 336 http://www.sew-eurodrive.be service-antwerpen@sew-eurodrive.be

Brazil			
Production **Sales** **Service**	**Sao Paulo**	SEW-EURODRIVE Brasil Ltda. Avenida Amâncio Gaiolli, 152 - Rodovia Presidente Dutra Km 208 Guarulhos - 07251-250 - SP SAT - SEW ATENDE - 0800 7700496	Tel. +55 11 2489-9133 Fax +55 11 2480-3328 http://www.sew-eurodrive.com.br sew@sew.com.br

Bulgaria			
Sales	**Sofia**	BEVER-DRIVE GmbH Bogdanovetz Str.1 BG-1606 Sofia	Tel. +359 2 9151160 Fax +359 2 9151166 bever@mail.bg

Cameroon			
Sales	**Douala**	Electro-Services Rue Drouot Akwa B.P. 2024 Douala	Tel. +237 33 431137 Fax +237 33 431137 electrojemba@yahoo.fr

Canada			
Assembly **Sales** **Service**	**Toronto**	SEW-EURODRIVE CO. OF CANADA LTD. 210 Walker Drive Bramalea, ON L6T 3W1	Tel. +1 905 791-1553 Fax +1 905 791-2999 http://www.sew-eurodrive.ca l.watson@sew-eurodrive.ca
	Vancouver	SEW-EURODRIVE CO. OF CANADA LTD. Tilbury Industrial Park 7188 Honeyman Street Delta, BC V4G 1G1	Tel. +1 604 946-5535 Fax +1 604 946-2513 b.wake@sew-eurodrive.ca
	Montreal	SEW-EURODRIVE CO. OF CANADA LTD. 2555 Rue Leger Lasalle, PQ H8N 2V9	Tel. +1 514 367-1124 Fax +1 514 367-3677 a.peluso@sew-eurodrive.ca
	Additional addresses for service in Canada provided on request!		



Chile			
Assembly **Sales** **Service**	**Santiago de Chile**	SEW-EURODRIVE CHILE LTDA. Las Encinas 1295 Parque Industrial Valle Grande LAMPA RCH-Santiago de Chile P.O. Box Casilla 23 Correo Quilicura - Santiago - Chile	Tel. +56 2 75770-00 Fax +56 2 75770-01 http://www.sew-eurodrive.cl ventas@sew-eurodrive.cl

China			
Production **Assembly** **Sales** **Service**	**Tianjin**	SEW-EURODRIVE (Tianjin) Co., Ltd. No. 46, 7th Avenue, TEDA Tianjin 300457	Tel. +86 22 25322612 Fax +86 22 25323273 info@sew-eurodrive.cn http://www.sew-eurodrive.com.cn
Assembly **Sales** **Service**	**Suzhou**	SEW-EURODRIVE (Suzhou) Co., Ltd. 333, Suhong Middle Road Suzhou Industrial Park Jiangsu Province, 215021	Tel. +86 512 62581781 Fax +86 512 62581783 suzhou@sew-eurodrive.cn
	Guangzhou	SEW-EURODRIVE (Guangzhou) Co., Ltd. No. 9, JunDa Road East Section of GETDD Guangzhou 510530	Tel. +86 20 82267890 Fax +86 20 82267922 guangzhou@sew-eurodrive.cn
	Shenyang	SEW-EURODRIVE (Shenyang) Co., Ltd. 10A-2, 6th Road Shenyang Economic Technological Development Area Shenyang, 110141	Tel. +86 24 25382538 Fax +86 24 25382580 shenyang@sew-eurodrive.cn
	Wuhan	SEW-EURODRIVE (Wuhan) Co., Ltd. 10A-2, 6th Road No. 59, the 4th Quanli Road, WEDA 430056 Wuhan	Tel. +86 27 84478388 Fax +86 27 84478389 wuhan@sew-eurodrive.cn
	Xi'An	SEW-EURODRIVE (Xi'An) Co., Ltd. No. 12 Jinye 2nd Road Xi'An High-Technology Industrial Development Zone Xi'An 710065	Tel. +86 29 68686262 Fax +86 29 68686311 xian@sew-eurodrive.cn

Colombia			
Assembly **Sales** **Service**	**Bogotá**	SEW-EURODRIVE COLOMBIA LTDA. Calle 22 No. 132-60 Bodega 6, Manzana B Santafé de Bogotá	Tel. +57 1 54750-50 Fax +57 1 54750-44 http://www.sew-eurodrive.com.co sewcol@sew-eurodrive.com.co

Croatia			
Sales **Service**	**Zagreb**	KOMPEKS d. o. o. Zeleni dol 10 HR 10 000 Zagreb	Tel. +385 1 4613-158 Fax +385 1 4613-158 kompeks@inet.hr

Czech Republic			
Sales	**Prague**	SEW-EURODRIVE CZ S.R.O. Business Centrum Praha Lužná 591 CZ-16000 Praha 6 - Vokovice	Tel. +420 255 709 601 Fax +420 220 121 237 http://www.sew-eurodrive.cz sew@sew-eurodrive.cz
Technical Offices	**Brno**	SEW-EURODRIVE CZ S.R.O. Křenová 52 CZ -60200 Brno	Tel. +420 543 256 151 +420 543 256 163 Fax +420 543 256 845
	Hradec Králové	SEW-EURODRIVE CZ S.R.O. Čechova 498 CZ-50202 Hradec Králové	Tel. +420 495 510 141 Fax +420 495 521 313

Czech Republic			
	Plzeň	SEW-EURODRIVE CZ S.R.O. Areal KRPA a.s. Zahradni 173/2 CZ-32600 Plzeň	Tel. +420 378 775 300 Fax +420 377 970 710
	Ostrava	SEW-EURODRIVE CZ S.R.O. Studentská 6202/17 CZ-708 00 Ostrava-Poruba	Tel. +420 597 329 044 Mobile +420 724 889 965
	Klatovy	SEW-EURODRIVE CZ S.R.O. Technická kancelář Klatovy Domažlická 800 CZ-33901 Klatovy	Tel. +420 376 310 729 Fax +420 376 310 725

Denmark			
Assembly **Sales** **Service**	**Copenhagen**	SEW-EURODRIVEA/S Geminivej 28-30 DK-2670 Greve	Tel. +45 43 9585-00 Fax +45 43 9585-09 http://www.sew-eurodrive.dk sew@sew-eurodrive.dk

Egypt			
Sales **Service**	**Cairo**	Copam Egypt for Engineering & Agencies 33 El Hegaz ST, Heliopolis, Cairo	Tel. +20 2 22566-299 + 1 23143088 Fax +20 2 22594-757 http://www.copam-egypt.com/ copam@datum.com.eg

Estonia			
Sales	**Tallin**	ALAS-KUUL AS Reti tee 4 EE-75301 Peetri küla, Rae vald, Harjumaa	Tel. +372 6593230 Fax +372 6593231 veiko.soots@alas-kuul.ee

Finland			
Assembly **Sales** **Service**	**Lahti**	SEW-EURODRIVE OY Vesimäentie 4 FIN-15860 Hollola 2	Tel. +358 201 589-300 Fax +358 3 780-6211 sew@sew.fi http://www.sew-eurodrive.fi
Technical Offices	**Helsinki**	SEW-EURODRIVE OY Luutnantintie 5 FIN-00410 Helsinki	Tel. +358 201 589-300 Fax + 358 9 5666-311 sew@sew.fi
	Vaasa	SEW-EURODRIVE OY Hietasaarenkatu 18 FIN-65100 Vaasa	Tel. +358 201 589-300 Fax +358 6 3127-470 sew@sew.fi
	Rovaniemi	SEW-EURODRIVE OY Valtakatu 4 A FIN-96100 Rovaniemi	Tel. +358 201 589-300 Fax +358 201 589-239 sew@sew.fi
Production **Assembly**	**Karkkila**	SEW Industrial Gears Oy Valurinkatu 6, PL 8 FI-03600 Karkkila, 03601 Karkkila	Tel. +358 201 589-300 Fax +358 201 589-310 sew@sew.fi http://www.sew-eurodrive.fi

Gabon			
Sales	**Libreville**	ESG Electro Services Gabun Feu Rouge Lalala 1889 Libreville Gabun	Tel. +241 741059 Fax +241 741059 esg_services@yahoo.fr



Great Britain			
Assembly **Sales** **Service**	**Normanton**	SEW-EURODRIVE Ltd. Beckbridge Industrial Estate P.O. Box No.1 Normanton, West-Yorkshire WF6 1QR	Tel. +44 1924 893-855 Fax +44 1924 893-702 http://www.sew-eurodrive.co.uk info@sew-eurodrive.co.uk
Technical Offices	**London**	SEW-EURODRIVE Ltd. 764 Finchely Road, Temple Fortune London N.W.11 7TH	Tel. +44 20 8458-8949 Fax +44 20 8458-7417
	Midlands	SEW-EURODRIVE Ltd. 5 Sugar Brook court, Aston Road, Bromsgrove, Worcs B60 3EX	Tel. +44 1527 877-319 Fax +44 1527 575-245
	Scotland	SEW-EURODRIVE Ltd. Scottish Office No 37 Enterprise House Springkerse Business Park Stirling FK7 7UF Scotland	Tel. +44 17 8647-8730 Fax +44 17 8645-0223

Greece			
Sales **Service**	**Athens**	Christ. Boznos & Son S.A. 12, K. Mavromichali Street P.O. Box 80136 GR-18545 Piraeus	Tel. +30 2 1042 251-34 Fax +30 2 1042 251-59 http://www.boznos.gr info@boznos.gr
Technical Office	**Thessaloniki**	Christ. Boznos & Son S.A. Asklipiou 26 562 24 Evosmos, Thessaloniki	Tel. +30 2 310 7054-00 Fax +30 2 310 7055-15 info@boznos.gr

Hong Kong			
Assembly **Sales** **Service**	**Hong Kong**	SEW-EURODRIVE LTD. Unit No. 801-806, 8th Floor Hong Leong Industrial Complex No. 4, Wang Kwong Road Kowloon, Hong Kong	Tel. +852 36902200 Fax +852 36902211 contact@sew-eurodrive.hk

Hungary			
Sales **Service**	**Budapest**	SEW-EURODRIVE Kft. H-1037 Budapest Kunigunda u. 18	Tel. +36 1 437 06-58 Fax +36 1 437 06-50 office@sew-eurodrive.hu

Iceland			
Sales	**Reykjavik**	Vélaverk ehf. Bolholti 8, 3h. IS - 105 Reykjavik	Tel. +354 568 3536 Fax +354 568 3537 velaverk@velaverk.is

India			
Registered Office **Assembly** **Sales** **Service**	**Vadodara**	SEW-EURODRIVE India Private Limited Plot No. 4, GIDC POR Ramangamdi • Vadodara - 391 243 Gujarat	Tel. +91 265 3045200, +91 265 2831086 Fax +91 265 3045300, +91 265 2831087 http://www.seweurodriveindia.com sales@seweurodriveindia.com subodh.ladwa@seweurodriveindia.com

India			
Assembly **Sales** **Service**	**Chennai**	SEW-EURODRIVE India Private Limited Plot No. K3/1, Sipcot Industrial Park Phase II Mambakkam Village Sriperumbudur - 602105 Kancheepuram Dist, Tamil Nadu	Tel. +91 44 37188888 Fax +91 44 37188811 c.v.shivkumar@seweurodriveindia.com
Technical Offices	**Ahmedabad**	SEW-EURODRIVE India Private Limited 306, Shaan office complex, Behind Sakar-IV, Ellisebridge, Ashram Road Ahmedabad – Gujarat	Tel. +91 79 40072067/68 Fax +91 79 40072069 subodh.ladwa@seweurodriveindia.com
	Bengaluru	SEW-EURODRIVE India Private Limited 308, Prestige Centre Point 7, Edward Road Bengaluru - 560052 - Karnataka	Tel. +91 80 22266565 Fax +91 80 22266569 salesbang@seweurodriveindia.com ganesh@seweurodriveindia.com
	Chandigarh	SEW EURODRIVE India Private Limited Sujit Kumar Mishra H.No.5464/3 Modern Housing Complex Manimajra Chandigarh -160101	Tel. +91 9878469579 Fax +91 1722738664 saleschand@seweurodriveindia.com
	Chennai	SEW-EURODRIVE India Private Limited 2nd Floor, Josmans Complex, No. 5, McNichols Road, Chetpet Chennai - 600031 - Tamil Nadu	Tel. +91 44 42849813 Fax +91 44 42849816 saleschen@seweurodriveindia.com c.v.shivkumar@seweurodriveindia.com
	Coimbatore	SEW-EURODRIVE India Private Limited Office No 60 Arpee Centre (Opp Annapoorna Hotel) 420 N, NSR Road, Saibaba Colony Coimbatore 641 0111 - Tamil Nadu	Tel. +91 422 2455420 Fax +91 422 2443988 salescmb@seweurodriveindia.com p.selvakumar@seweurodriveindia.com
	Cuttack	SEW-EURODRIVE India Private Limited Plot No.- 1764, Nuasahi, Nayapalli Bhubaneswar-12 Orissa	Tel. +91 9937446333 manoranjan.sahoo@seweurodriveindia.com
	Hyderabad	SEW-EURODRIVE India Private Limited 408, 4th Floor, Meridian Place Green Park Road Amerpeet Hyderabad - 500016 - Andhra Pradesh	Tel. +91 40 23414698 Fax +91 40 23413884 saleshyd@seweurodriveindia.com ma.choudary@seweurodriveindia.com
	Jamshedpur	SEW-EURODRIVE India Private Limited Flat No.: B/2, B.S. Apartment Road No.: 4, Contractor's area, Bistupur Jamshedpur 831 001 - Chhattisgarh	Tel. +91 9934123671 siddaratha.mishra@seweurodriveindia.com
	Kolkata	SEW EURODRIVE India Private Limited 2nd floor, Room No. 35 Chowringhee Court 55, Chowringhee Road Kolkata - 700 071 - West Bengal	Tel. +91 33 22827457 Fax +91 33 22894204 saleskal@seweurodriveindia.com a.j.biswas@seweurodriveindia.com
	Lucknow	SEW-EURODRIVE India Private Limited 69, Shiv Vihar Colony Vikas Nagar-5 Lucknow 226022 - Uttar Pradesh	Tel. +91 9793627333 amit.nigam@seweurodriveindia.com
	Mumbai	SEW-EURODRIVE India Private Limited 312 A, 3rd Floor, Acme Plaza, J.B. Nagar, Andheri Kurla Road, Andheri (E) Mumbai - 400059 - Maharashtra	Tel. +91 22 28348440 Fax +91 22 28217858 salesmumbai@seweurodriveindia.com p.s.ray@seweurodriveindia.com



India			
	New Delhi	SEW-EURODRIVE India Private Limited 418-419, Suneja Tower-1 District Centre, Janak Puri New Delhi 110 058	Tel. +91 11 25544111 Fax +91 11 25544113 salesdelhi@seweurodriveindia.com vikram.juneja@seweurodriveindia.com
	Pune	SEW-EURODRIVE India Private Limited Lunawat Prism 4th floor, S. No. 148, Neena Co-Operative Housing Society, Paud Road, Pune 411038 - Maharashtra	Tel. +91 20 25380730 / 735 Fax +91 20 25380721 salespune@seweurodriveindia.com praveen.hosur@seweurodriveindia.com
	Raipur	SEW-EURODRIVE India Private Limited A-42, Ashoka Millenium Complex, Ring Road-1, Raipur 492 001 - Chhattisgarh	Tel. +91 771 4090765 Fax +91 771 4090765 sutanu.sarkar@seweurodriveindia.com

Indonesia			
Sales	**Medan II**	PT. Serumpun Indah Lestari Jl. Pulau Solor NO. 8 Kawasan Industri Medan II	Tel. +62 61 687 1221 Fax +62 61 687 1429 serumpunindah@yahoo.com

Ireland			
Sales **Service**	**Dublin**	Alperton Engineering Ltd. 48 Moyle Road Dublin Industrial Estate Glasnevin, Dublin 11	Tel. +353 1 830-6277 Fax +353 1 830-6458 info@alperton.ie http://www.alperton.ie

Israel			
Sales	**Tel-Aviv**	Liraz Handasa Ltd. Ahofer Str 34B / 228 58858 Holon	Tel. +972 3 5599511 Fax +972 3 5599512 http://www.liraz-handasa.co.il office@liraz-handasa.co.il

Italy			
Assembly **Sales** **Service**	**Solaro**	SEW-EURODRIVE di R. Blickle & Co.s.a.s. Via Bernini,14 I-20020 Solaro (Milano)	Tel. +39 02 96 9801 Fax +39 02 96 799781 http://www.sew-eurodrive.it sewit@sew-eurodrive.it
Technical Offices	**Bologna**	SEW-EURODRIVE di R. Blickle & Co.s.a.s. Via della Grafica, 47 I-40064 Ozzano dell'Emilia (Bo)	Tel. +39 051 65-23-801 Fax +39 051 796-595
	Caserta	SEW-EURODRIVE di R. Blickle & Co.s.a.s. Viale Carlo III Km. 23,300 I-81020 S. Nicola la Strada (Caserta)	Tel. +39 0823 219011 Fax +39 0823 421414
	Milan	SEW-EURODRIVE di R. Blickle & Co.s.a.s. Via Bernini,14 I-20020 Solaro (Milano)	Tel. +39 02 96 980229 Fax +39 02 96 799781
	Pescara	SEW-EURODRIVE di R. Blickle & Co.s.a.s. Viale Europa,132 I-65010 Villa Raspa di Spoltore (PE)	Tel. +39 085 41-59-427 Fax +39 085 41-59-643
	Torino	SEW-EURODRIVE di R. Blickle & Co.s.a.s. Filiale Torino c.so Unione Sovietica 612/15 - int. C I-10135 Torino	Tel. +39 011 3473780 Fax +39 011 3473783
	Verona	SEW-EURODRIVE di R. Blickle & Co.s.a.s. Via P. Sgulmero, 27/A I-37132 Verona	Tel. +39 045 89-239-11 Fax +39 045 97-6079

Ivory Coast			
Sales	**Abidjan**	SICA Société industrielle & commerciale pour l'Afrique 165, Boulevard de Marseille 26 BP 1115 Abidjan 26	Tel. +225 21 25 79 44 Fax +225 21 25 88 28 sicamot@aviso.ci

Japan			
Assembly **Sales** **Service**	**Iwata**	SEW-EURODRIVE JAPAN CO., LTD 250-1, Shimoman-no, Iwata Shizuoka 438-0818	Tel. +81 538 373811 Fax +81 538 373855 http://www.sew-eurodrive.co.jp sewjapan@sew-eurodrive.co.jp
Technical Offices	**Fukuoka**	SEW-EURODRIVE JAPAN CO., LTD. C-go, 5th-floor, Yakuin-Hiruzu-Bldg. 1-5-11, Yakuin, Chuo-ku Fukuoka, 810-0022	Tel. +81 92 713-6955 Fax +81 92 713-6860 sewkyushu@jasmine.ocn.ne.jp
	Osaka	SEW-EURODRIVE JAPAN CO., LTD. Higobashi Shimizu Bldg. 10th flor 1-3-7 Tosabori, Nishi-ku Osaka, 550-0001	Tel. +81 6 6444--8330 Fax +81 6 6444--8338 sewosaka@crocus.ocn.ne.jp
	Tokyo	SEW-EURODRIVE JAPAN CO., LTD. Omarimon Yusen Bldg. 13th floor 3-23-5 Nishinbashi, Minato-ku Tokyo 105-0003	Tel. +81 3 3239-0469 Fax +81 3 3239-0943 sewtokyo@basil.ocn.ne.jp

Kazakhstan			
Sales	**Almaty**	ТОО "СЕВ-ЕВРОДРАЙВ" 050061, Республика Казахстан г.Алматы, пр.Райымбека, 348	Тел. +7 (727) 334 1880 Факс +7 (727) 334 1881 http://www.sew-eurodrive.kz sew@sew-eurodrive.kz

Latvia			
Sales	**Riga**	SIA Alas-Kuul Katlakalna 11C LV-1073 Riga	Tel. +371 6 7139253 Fax +371 6 7139386 http://www.alas-kuul.com info@alas-kuul.com

Lebanon			
Sales	**Beirut**	Gabriel Acar & Fils sarl B. P. 80484 Bourj Hammoud, Beirut	Tel. +961 1 510 532 Fax +961 1 494 971 ssacar@info.com.lb
Jordan Kuwait Saudi Arabia Syria	**Beirut**	Middle East Drives S.A.L. (offshore) Sin El Fil. B. P. 55-378 Beirut	Tel. +961 1 494 786 Fax +961 1 494 971 info@medrives.com http://www.medrives.com

Lithuania			
Sales	**Alytus**	UAB Irseva Statybininku 106C LT-63431 Alytus	Tel. +370 315 79204 Fax +370 315 56175 info@irseva.lt http://www.sew-eurodrive.lt

Luxembourg			
Assembly **Sales** **Service**	**Brüssel**	CARON-VECTOR S.A. Avenue Eiffel 5 B-1300 Wavre	Tel. +32 10 231-311 Fax +32 10 231-336 http://www.sew-eurodrive.lu info@caron-vector.be



Malaysia			
Assembly **Sales** **Service**	**Johore**	SEW-EURODRIVE SDN BHD No. 95, Jalan Seroja 39, Taman Johor Jaya 81000 Johor Bahru, Johor West Malaysia	Tel. +60 7 3549409 Fax +60 7 3541404 sales@sew-eurodrive.com.my
Technical Offices	**Kota Kinabalu**	SEW-EURODRIVE Sdn Bhd (Kota Kinabalu Branch) Lot No. 2,1st Floor, Inanam Baru Phase III, Miles 5.1 /2, Jalan Tuaran, Inanam 89350 Kota Kinabalu Sabah, Malaysia	Tel. +60 88 424792 Fax +60 88 424807
	Kuala Lumpur	SEW-EURODRIVE Sdn. Bhd. No. 2, Jalan Anggerik Mokara 31/46 Kota Kemuning Seksyen 31 40460 Shah Alam Selangor Darul Ehsan	Tel. +60 3 5229633 Fax +60 3 5229622 sewpjy@po.jaring.my
	Kuching	SEW-EURODRIVE Sdn. Bhd. Lot 268, Section 9 KTLD Lorong 9, Jalan Satok 93400 Kuching, Sarawak East Malaysia	Tel. +60 82 232380 Fax +60 82 242380
	Penang	SEW-EURODRIVE Sdn. Bhd. No. 38, Jalan Bawal Kimsar Garden 13700 Prai, Penang	Tel. +60 4 3999349 Fax +60 4 3999348 seweurodrive@po.jaring.my

Mauritania			
Sales	**Zouérate**	AFRICOM - SARL En Face Marché Dumez P.B. 88 Zouérate	Tel. +222 544 0 314 Fax +222 544 0 538 cybertiris@mauritel.mr

Mexico			
Assembly **Sales** **Service**	**Quéretaro**	SEW-EURODRIVE MEXICO SA DE CV SEM-981118-M93 Tequisquiapan No. 102 Parque Industrial Quéretaro C.P. 76220 Quéretaro, México	Tel. +52 442 1030-300 Fax +52 442 1030-301 http://www.sew-eurodrive.com.mx scmexico@seweurodrive.com.mx

Morocco			
Sales	**Casablanca**	Afit Route D'El Jadida KM 14 RP8 Province de Nouaceur Commune Rurale de Bouskoura MA 20300 Casablanca	Tel. +212 522633700 Fax +212 522621588 fatima.haquiq@premium.net http://www.groupe-premium.com

Netherlands			
Assembly **Sales** **Service**	**Rotterdam**	VECTOR Aandrijftechniek B.V. Industrieweg 175 NL-3044 AS Rotterdam Postbus 10085 NL-3004 AB Rotterdam	Tel. +31 10 4463-700 Fax +31 10 4155-552 http://www.vector.nu info@vector.nu

New Zealand			
Assembly **Sales** **Service**	**Auckland**	SEW-EURODRIVE NEW ZEALAND LTD. P.O. Box 58-428 82 Greenmount drive East Tamaki Auckland	Tel. +64 9 2745627 Fax +64 9 2740165 http://www.sew-eurodrive.co.nz sales@sew-eurodrive.co.nz

New Zealand			
	Christchurch	SEW-EURODRIVE NEW ZEALAND LTD. 10 Settlers Crescent, Ferrymead Christchurch	Tel. +64 3 384-6251 Fax +64 3 384-6455 sales@sew-eurodrive.co.nz
Technical Office	**Palmerston North**	SEW-EURODRIVE NEW ZEALAND LTD. C/-Grant Shearman, RD 5, Aronui Road Palmerston North	Tel. +64 6 355-2165 Fax +64 6 355-2316 sales@sew-eurodrive.co.nz

Norway			
Assembly **Sales** **Service**	**Moss**	SEW-EURODRIVE A/S Solgaard skog 71 N-1599 Moss	Tel. +47 69 24 10 20 Fax +47 69 24 10 40 http://www.sew-eurodrive.no sew@sew-eurodrive.no

Pakistan			
Sales	**Karachi**	Industrial Power Drives Al-Fatah Chamber A/3, 1st Floor Central Commercial Area, Sultan Ahmed Shah Road, Block 7/8, Karachi	Tel. +92 21 452 9369 Fax +92-21-454 7365 seweurodrive@cyber.net.pk

Peru			
Assembly **Sales** **Service**	**Lima**	SEW DEL PERU MOTORES REDUCTORES S.A.C. Los Calderos, 120-124 Urbanizacion Industrial Vulcano, ATE, Lima	Tel. +51 1 3495280 Fax +51 1 3493002 http://www.sew-eurodrive.com.pe sewperu@sew-eurodrive.com.pe

Poland			
Assembly **Sales** **Service**	**Lodz**	SEW-EURODRIVE Polska Sp.z.o.o. ul. Techniczna 5 PL-92-518 Łódź	Tel. +48 42 676 53 00 Fax +48 42 676 53 45 http://www.sew-eurodrive.pl sew@sew-eurodrive.pl
	24 Hour Service		Tel. +48 602 739 739 (+48 602 SEW SEW) serwis@sew-eurodrive.pl
Technical Office	**Tychy**	SEW-EURODRIVE Polska Sp.z.o.o. ul. Fabryczna 5 PL-43-100 Tychy	Tel. +48 32 32 32 610 Fax +48 32 32 32 647
	Bydgoszcz	SEW-EURODRIVE Polska Sp.z.o.o. ul. Fordońska 246 PL-85-959 Bydgoszcz	Tel. +48 52 3606590 Fax +48 52 3606591
	Poznan	SEW-EURODRIVE Polska Sp.z.o.o. ul. Romana Maya 1 PL-61-371 Poznań	Tel. +48 61 8741640 Fax +48 61 8741641
	Radom	SEW-EURODRIVE Polska Sp.z.o.o. ul. Słowackiego 84 PL-26-600 Radom	Tel. +48 48 365 40 50 Fax +48 48 365 40 51
	Szczecinek	SEW-EURODRIVE Polska Sp.z.o.o. ul. Mickiewicza 2 PL-78-400 Szczecinek	Tel. +48 94 3728820 Fax +48 94 3728821

Portugal			
Assembly **Sales** **Service**	**Coimbra**	SEW-EURODRIVE, LDA. Apartado 15 P-3050-901 Mealhada	Tel. +351 231 20 9670 Fax +351 231 20 3685 http://www.sew-eurodrive.pt infosew@sew-eurodrive.pt

Portugal			
Technical Offices	**Lisboa**	SEW-EURODRIVE, LDA. Núcleo Empresarial I de São Julião do Tojal Rua de Entremuros, 54 Fracção I P-2660-533 São Julião do Tojal	Tel. +351 21 958-0198 Fax +351 21 958-0245 esc.lisboa@sew-eurodrive.pt
	Porto	SEW-EURODRIVE, LDA. Av. 25 de Abril, 68 4440-502 Valongo	Tel. +351 229 350 383 Fax +351 229 350 384 MobilTel. +351 9 32559110 esc.porto@sew-eurodrive.pt

Romania			
Sales **Service**	**Bucharest**	Sialco Trading SRL str. Madrid nr.4 011785 Bucuresti	Tel. +40 21 230-1328 Fax +40 21 230-7170 sialco@sialco.ro

Russia			
Assembly **Sales** **Service**	**St. Petersburg**	ZAO SEW-EURODRIVE P.O. Box 36 195220 St. Petersburg Russia	Tel. +7 812 3332522 +7 812 5357142 Fax +7 812 3332523 http://www.sew-eurodrive.ru sew@sew-eurodrive.ru
Technical Office	**Yekaterinburg**	ZAO SEW-EURODRIVE Kominterna Str. 16 Office 614 RUS-620078 Ekaterinburg	Tel. +7 343 310 3977 Fax +7 343 310 3978 eso@sew-eurodrive.ru
	Irkutsk	ZAO SEW-EURODRIVE 5-Armii Str., 31 RUS-664011 Irkutsk	Tel. +7 3952 25 5880 Fax +7 3952 25 5881 iso@sew-eurodrive.ru
	Moskau	ZAO SEW-EURODRIVE RUS-107023 Moskau	Tel. +7 495 9337090 Fax +7 495 9337094 mso@sew-eurodrive.ru
	Novosibirsk	ZAO SEW-EURODRIVE pr. K Marksa, d.30 RUS-630087 Novosibirsk	Tel. +7 383 3350200 Fax +7 383 3462544 nso@sew-eurodrive.ru
	Togliatti	ZAO SEW-EURODRIVE Sportivnaya Str. 4B, office 2 Samarskaya obl. RUS-445057 Togliatti	Tel. +7 8482 710529 Fax +7 8482 810590

Senegal			
Sales	**Dakar**	SENEMECA Mécanique Générale Km 8, Route de Rufisque B.P. 3251, Dakar	Tel. +221 338 494 770 Fax +221 338 494 771 senemeca@sentoo.sn http://www.senemeca.com

Serbia			
Sales	**Beograd**	DIPAR d.o.o. Ustanicka 128a PC Košum, IV floor SCG-11000 Beograd	Tel. +381 11 347 3244 / +381 11 288 0393 Fax +381 11 347 1337 office@dipar.rs

Singapore			
Assembly **Sales** **Service**	**Singapore**	SEW-EURODRIVE PTE. LTD. No 9, Tuas Drive 2 Jurong Industrial Estate Singapore 638644	Tel. +65 68621701 Fax +65 68612827 http://www.sew-eurodrive.com.sg sewsingapore@sew-eurodrive.com

Slovakia			
Sales	**Bratislava**	SEW-Eurodrive SK s.r.o. Rybničná 40 SK-831 06 Bratislava	Tel. +421 2 33595 202 Fax +421 2 33595 200 sew@sew-eurodrive.sk http://www.sew-eurodrive.sk
	Žilina	SEW-Eurodrive SK s.r.o. Industry Park - PChZ ulica M.R.Štefánika 71 SK-010 01 Žilina	Tel. +421 41 700 2513 Fax +421 41 700 2514 sew@sew-eurodrive.sk
	Banská Bystrica	SEW-Eurodrive SK s.r.o. Rudlovská cesta 85 SK-974 11 Banská Bystrica	Tel. +421 48 414 6564 Fax +421 48 414 6566 sew@sew-eurodrive.sk
	Košice	SEW-Eurodrive SK s.r.o. Slovenská ulica 26 SK-040 01 Košice	Tel. +421 55 671 2245 Fax +421 55 671 2254 sew@sew-eurodrive.sk

Slovenia			
Sales **Service**	**Celje**	Pakman - Pogonska Tehnika d.o.o. UI. XIV. divizije 14 SLO - 3000 Celje	Tel. +386 3 490 83-20 Fax +386 3 490 83-21 pakman@siol.net

South Africa			
Assembly **Sales** **Service**	**Johannesburg**	SEW-EURODRIVE (PROPRIETARY) LIMITED Eurodrive House Cnr. Adcock Ingram and Aerodrome Roads Aeroton Ext. 2 Johannesburg 2013 P.O.Box 90004 Bertsham 2013	Tel. +27 11 248-7000 Fax +27 11 494-3104 http://www.sew.co.za info@sew.co.za
	Cape Town	SEW-EURODRIVE (PROPRIETARY) LIMITED Rainbow Park Cnr. Racecourse & Omuramba Road Montague Gardens Cape Town P.O.Box 36556 Chempet 7442 Cape Town	Tel. +27 21 552-9820 Fax +27 21 552-9830 Telex 576 062 cfoster@sew.co.za
	Durban	SEW-EURODRIVE (PROPRIETARY) LIMITED 2 Monaco Place Pinetown Durban P.O. Box 10433, Ashwood 3605	Tel. +27 31 700-3451 Fax +27 31 700-3847 cdejager@sew.co.za
	Nelspruit	SEW-EURODRIVE (PTY) LTD. 7 Christie Crescent Vintonia P.O.Box 1942 Nelspruit 1200	Tel. +27 13 752-8007 Fax +27 13 752-8008 robermeyer@sew.co.za
Technical Offices	**Port Elizabeth**	SEW-EURODRIVE PTY LTD. 8 Ruan Access Park Old Cape Road Greenbushes 6000 Port Elizabeth	Tel. +27 41 3722246 Fax +27 41 3722247 dtait@sew.co.za
	Richards Bay	SEW-EURODRIVE PTY LTD. 103 Bulion Blvd Richards Bay P.O. Box 458 Richards Bay, 3900	Tel. +27 35 797-3805 Fax +27 35 797-3819 jswart@sew.co.za



South Korea			
Assembly **Sales** **Service**	**Ansan-City**	SEW-EURODRIVE KOREA CO., LTD. B 601-4, Banweol Industrial Estate 1048-4, Shingil-Dong Ansan 425-120	Tel. +82 31 492-8051 Fax +82 31 492-8056 http://www.sew-korea.co.kr master.korea@sew-eurodrive.com
	Busan	SEW-EURODRIVE KOREA Co., Ltd. No. 1720 - 11, Songjeong - dong Gangseo-ku Busan 618-270	Tel. +82 51 832-0204 Fax +82 51 832-0230 master@sew-korea.co.kr
Technical Offices	**Daegu**	SEW-EURODRIVE KOREA Co., Ltd. No.1108 Sungan officetel 87-36, Duryu 2-dong, Dalseo-ku Daegu 704-712	Tel. +82 53 650-7111 Fax +82 53 650-7112
	DaeJeon	SEW-EURODRIVE KOREA Co., Ltd. No. 1502, Hongin officetel 536-9, Bongmyung-dong, Yusung-ku Daejeon 305-301	Tel. +82 42 828-6461 Fax +82 42 828-6463
	Kwangju	SEW-EURODRIVE KOREA Co., Ltd. 4fl., Dae-Myeong B/D 96-16 Unam-dong, Buk-ku Kwangju 500-170	Tel. +82 62 511-9172 Fax +82 62 511-9174
	Seoul	SEW-EURODRIVE KOREA Co., Ltd. No.504 Sunkyung officetel 106-4 Kuro 6-dong, Kuro-ku Seoul 152-054	Tel. +82 2 862-8051 Fax +82 2 862-8199

Spain			
Assembly **Sales** **Service**	**Bilbao**	SEW-EURODRIVE ESPAÑA, S.L. Parque Tecnológico, Edificio, 302 E-48170 Zamudio (Vizcaya)	Tel. +34 94 43184-70 Fax +34 94 43184-71 http://www.sew-eurodrive.es sew.spain@sew-eurodrive.es
Technical Offices	**Barcelona**	Delegación Barcelona Avenida Francesc Maciá 40-44 Oficina 4.2 E-08208 Sabadell (Barcelona)	Tel. +34 93 7162200 Fax +34 93 7233007
	Lugo	Delegación Noroeste Apartado, 1003 E-27080 Lugo	Tel. +34 639 403348 Fax +34 982 202934
	Madrid	Delegación Madrid Gran Via. 48-2° A-D E-28220 Majadahonda (Madrid)	Tel. +34 91 6342250 Fax +34 91 6340899
	Seville	MEB Pólogono Calonge, C/A Nave 2 - C E-41.077 Sevilla	Tel. +34 954 356 361 Fax +34 954 356 274 mebsa.sevilla@mebsa.com
	Valencia	MEB Músico Andreu i Piqueres, 4 E-46.900 Torrente (Valencia)	Tel. +34 961 565 493 Fax +34 961 566 688 mebsa.valencia@mebsa.com

Sri Lanka			
Sales	**Colombo**	SM International (Pte) Ltd 254, Galle Raod Colombo 4, Sri Lanka	Tel. +94 1 2584887 Fax +94 1 2582981

Sweden			
Assembly **Sales** **Service**	**Jönköping**	SEW-EURODRIVE AB Gnejsvägen 6-8 S-55303 Jönköping Box 3100 S-55003 Jönköping	Tel. +46 36 3442 00 Fax +46 36 3442 80 http://www.sew-eurodrive.se jonkoping@sew.se

Sweden			
Sales	**Göteborg**	SEW-EURODRIVE AB Gustaf Werners gata 8 S-42132 Västra Frölunda	Tel. +46 31 70968 80 Fax +46 31 70968 93 goteborg@sew.se
	Stockholm	SEW-EURODRIVE AB Björkholmsvägen 10 S-14146 Huddinge	Tel. +46 8 44986 80 Fax +46 8 44986 93 stockholm@sew.se
	Malmö	SEW-EURODRIVE AB Borrgatan 5 S-21124 Malmö	Tel. +46 40 68064 80 Fax +46 40 68064 93 malmo@sew.se
	Skellefteå	SEW-EURODRIVE AB Trädgårdsgatan 8 S-93131 Skellefteå	Tel. +46 910 7153 80 Fax +46 910 7153 93 skelleftea@sew.se

Switzerland			
Assembly **Sales** **Service**	**Basel**	Alfred Imhof A.G. Jurastrasse 10 CH-4142 Münchenstein bei Basel	Tel. +41 61 417 1717 Fax +41 61 417 1700 http://www.imhof-sew.ch info@imhof-sew.ch
Technical Offices	**Rhaetian Switzerland**	André Gerber Es Perreyres CH-1436 Chamblon	Tel. +41 24 445 3850 Fax +41 24 445 4887
	Bern / Solothurn	Rudolf Bühler Muntersweg 5 CH-2540 Grenchen	Tel. +41 32 652 2339 Fax +41 32 652 2331
	Central Switzerland and Ticino	Beat Lütolf Baumacher 11 CH-6244 Nebikon	Tel. +41 62 756 4780 Fax +41 62 756 4786
	Central Switzerland, Aargau	Armin Pfister Stierenweid CH-4950 Huttwill, BE	Tel. +41 62 962 54 55 Fax +41 62 962 54 56
	Zürich, Ticino	Gian-Michele Muletta Fischerstrasse 61 CH-8132 Egg bei Zürich	Tel. +41 44 994 81 15 Fax +41 44 994 81 16
	Bodensee and East Switzerland	Markus Künzle Eichweg 4 CH-9403 Goldach	Tel. +41 71 845 2808 Fax +41 71 845 2809

Taiwan (R.O.C.)			
Sales	**Nan Tou**	Ting Shou Trading Co., Ltd. No. 55 Kung Yeh N. Road Industrial District Nan Tou 540	Tel. +886 49 255353 Fax +886 49 257878
	Taipei	Ting Shou Trading Co., Ltd. 6F-3, No. 267, Sec. 2 Tung Hwa South Road, Taipei	Tel. +886 2 27383535 Fax +886 2 27368268 Telex 27 245 sewtwn@ms63.hinet.net

Thailand			
Assembly **Sales** **Service**	**Chonburi**	SEW-EURODRIVE (Thailand) Ltd. 700/456, Moo.7, Donhuaroh Muang Chonburi 20000	Tel. +66 38 454281 Fax +66 38 454288 sewthailand@sew-eurodrive.com
Technical Offices	**Bangkok**	SEW-EURODRIVE (Thailand) Ltd. 6th floor, TPS Building 1023, Phattanakarn Road Suanluang Bangkok,10250	Tel. +66 2 7178149 Fax +66 2 7178152 sewthailand@sew-eurodrive.com



Thailand			
	Hadyai	SEW-EURODRIVE (Thailand) Ltd. Hadyai Country Home Condominium 59/101 Soi.17/1 Rachas-Utid Road. Hadyai, Songkhla 90110	Tel. +66 74 359441 Fax +66 74 359442 sewthailand@sew-eurodrive.com
	Khonkaen	SEW-EURODRIVE (Thailand) Ltd. 4th Floor, Kaow-U-HA MOTOR Bldg, 359/2, Mitraphab Road. Muang District Khonkaen 40000	Tel. +66 43 225745 Fax +66 43 324871 sew-thailand@sew-eurodrive.com

Tunisia			
Sales	**Tunis**	T. M.S. Technic Marketing Service Zone Industrielle Mghira 2 Lot No. 39 2082 Fouchana	Tel. +216 79 40 88 77 Fax +216 79 40 88 66 tms@tms.com.tn

Turkey			
Assembly **Sales** **Service**	**Istanbul**	SEW-EURODRIVE Hareket Sistemleri San. ve Tic. Ltd. Sti. Bagdat Cad. Koruma Cikmazi No. 3 TR-34846 Maltepe ISTANBUL	Tel. +90 216 4419163 / 4419164 Fax +90 216 3055867 http://www.sew-eurodrive.com.tr sew@sew-eurodrive.com.tr
Technical Offices	**Adana**	SEW-EURODRIVE Hareket Sistemleri San. ve Tic. Ltd. Sti. Kizilay Caddesi 8 Sokak No 6 Daðtekin Is Merkezi Kat 4 Daire 2 TR-01170 SEYHAN / ADANA	Tel. +90 322 359 94 15 Fax +90 322 359 94 16
	Ankara	SEW-EURODRIVE Hareket Sistemleri San. ve Tic. Ltd. Sti. Özcelik Is Merkezi, 14. Sok, No. 4/42 TR-06370 Ostim/Ankara	Tel. +90 312 385 33 90 Fax +90 312 385 32 58
	Bursa	SEW-EURODRIVE Hareket Sistemleri San. ve Tic. Ltd. Sti. Üçevler Mah. Bayraktepe Sok. Akay İş Merkezi Kat:3 No: 7/6 TR Nilüfer/Bursa	Tel. +90 224 443 45 60 Fax +90 224 443 45 58
	Izmir	SEW-EURODRIVE Hareket Sistemleri San. ve Tic. Ltd. Sti. 1203/11 Sok. No. 4/613 Hasan Atli Is Merkezi TR-35110 Yenisehir-İzmir	Tel. +90 232 469 62 64 Fax +90 232 433 61 05

Ukraine			
Sales **Service**	**Dnepropetrovsk**	SEW-EURODRIVE Str. Rabochaja 23-B, Office 409 49008 Dnepropetrovsk	Tel. +380 56 370 3211 Fax +380 56 372 2078 http://www.sew-eurodrive.ua sew@sew-eurodrive.ua
Sales	**Kiev**	SEW-EURODRIVE GmbH S. Oleynika str. 21 02068 Kiev	Tel. +380 44 503 95 77 Fax +380 44 503 95 78 kso@sew-eurodrive.ua
	Donetsk	SEW-EURODRIVE GmbH 25th anniversary of RKKA av. 1-B, of. 805 Donetsk 83000	Tel. +380 62 38 80 545 Fax +380 62 38 80 533 dso@sew-eurodrive.ua

Uruguay			
Sales	**Montevideo**	SEW-EURODRIVE Uruguay, S. A. Jose Serrato 3569 Esqina Corumbe CP 12000 Montevideo	Tel. +598 2 21181-89 Fax +598 2 21181-89 sewuy@sew-eurodrive.com.uy

USA			
Production **Assembly** **Sales** **Service** **Corporate Offices**	**Southeast Region**	SEW-EURODRIVE INC. 1295 Old Spartanburg Highway P.O. Box 518 Lyman, S.C. 29365	Tel. +1 864 439-7537 Fax Sales +1 864 439-7830 Fax Manufacturing +1 864 439-9948 Fax Assembly +1 864 439-0566 Fax Confidential/HR +1 864 949-5557 http://www.seweurodrive.com cslyman@seweurodrive.com
Assembly **Sales** **Service**	**Northeast Region**	SEW-EURODRIVE INC. Pureland Ind. Complex 2107 High Hill Road, P.O. Box 481 Bridgeport, New Jersey 08014	Tel. +1 856 467-2277 Fax +1 856 845-3179 csbridgeport@seweurodrive.com
	Midwest Region	SEW-EURODRIVE INC. 2001 West Main Street Troy, Ohio 45373	Tel. +1 937 335-0036 Fax +1 937 332-0038 cstroy@seweurodrive.com
	Southwest Region	SEW-EURODRIVE INC. 3950 Platinum Way Dallas, Texas 75237	Tel. +1 214 330-4824 Fax +1 214 330-4724 csdallas@seweurodrive.com
	Western Region	SEW-EURODRIVE INC. 30599 San Antonio St. Hayward, CA 94544	Tel. +1 510 487-3560 Fax +1 510 487-6433 cshayward@seweurodrive.com
	Additional addresses for service in the USA provided on request!		

Venezuela			
Assembly **Sales** **Service**	**Valencia**	SEW-EURODRIVE Venezuela S.A. Av. Norte Sur No. 3, Galpon 84-319 Zona Industrial Municipal Norte Valencia, Estado Carabobo	Tel. +58 241 832-9804 Fax +58 241 838-6275 http://www.sew-eurodrive.com.ve ventas@sew-eurodrive.com.ve sewfinanzas@cantv.net

Vietnam			
Sales	**Ho Chi Minh City**	Nam Trung Co., Ltd 91 - 93 Tran Minh Quyen Street, District 10, HCMC	Tel. +84 8 8301026 Fax +84 8 8392223 namtrungco@hcm.vnn.vn



Inquiry/Order

Customer data:

Company: _____ Customer no.: _____
Department: _____
Name: _____ Phone: _____
Street/P.O. Box: _____ Fax: _____
_____ Email: _____
ZIP code/city: _____

Your contact partner at SEW:

Name: _____ Phone: _____
Technical Office: _____ Fax: _____

Technical data:

Quantity: _____ Requested delivery date: _____
Catalog designation: _____

Gear unit type:

☐ Helical ☐ Parallel shaft helical ☐ Helical-bevel ☐ Helical-worm ☐ Spiroplan®
☐ Multi-stage ☐ Servo ☐ Variable speed ☐ EMS ☐ Other: _____

Power: _____ kW **Output speed:** _____ rpm **Output torque:** _____ Nm

Cycles/h: _____ c/h **Cyclic duration factor:** S _____ / _____ % cdf

☐ 1-shift operation ☐ 2-shift operation ☐ 3-shift operation
☐ Uniform ☐ Non-uniform ☐ Extremely non-uniform

Mounting position:

M1	M2	M3	M4	M5	M6	Pivoting
☐	☐	☐	☐	☐	☐	☐

Housing type:

☐ Foot-mounted ☐ Flange (bore) ☐ Flange (thread)
☐ Torque arm ☐ Other: _____

Shaft type:

☐ Solid shaft with key ☐ Shrink disk Shaft/hollow shaft ∅: _____ mm
☐ Hollow shaft with key ☐ TorqLOC® Flange ∅: _____ mm

Shaft position (right-angle units): ☐ A | ☐ B | ☐ AB

Terminal box position: ☐ 0°(R) ☐ 90°(B) | ☐ 180°(L) | ☐ 270°(T)

Cable entry: ☐X ☐1 | ☐2 | ☐3

Degree of protection:

IP54	IP55	IP56	IP65	IP66	IP69K
☐	☐	☐	☐	☐	☐

Thermal class:

130(B)	155(F)	180(H)
☐	☐	☐

Surface/corrosion protection:

KS	OS1	OS2	OS3	OS4
☐	☐	☐	☐	☐

Mains voltage: _____ V
Mains frequency: ☐ 50Hz ☐ 60Hz

Connection type: ☐ Δ ☐ Y ☐ YY ☐ Y/Y

☐ For inverter operation: Max. frequency: _____ Hz | **Control range:** _____

Required options:

☐ Brake: voltage _____ V Braking torque: _____ Nm
☐ Manual brake release: ☐ HR or ☐ HF
☐ Forced cooling fan: Forced cooling fan voltage: _____ V
☐ Motor protection: ☐ TF or ☐ TH
☐ Encoder: _____
☐ Plug connection: _____
☐ Inverter: _____
☐ RAL 7031 or ☐ RAL _____

Other options:

Special ambient conditions:

Temperature from _____ °C to _____ °C | ☐ Outdoor use | ☐ Installation >1000m above msl
Other ambient conditions: _____
Other: _____

Place, date _____ **Signature:** _____

Connector positions of CMP motors

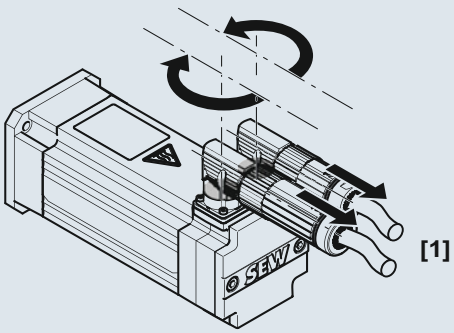

[1] “Adjustable” connector position

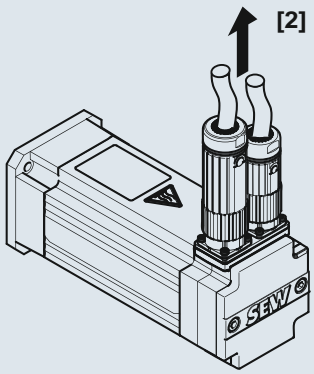

[2] “Radial” connector position

Position of the motor terminal box of CMP motors

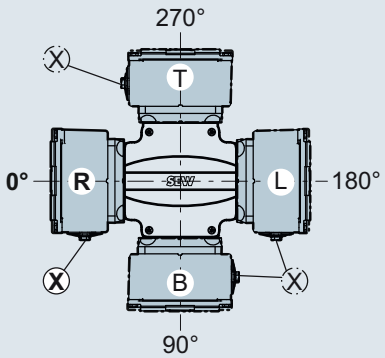

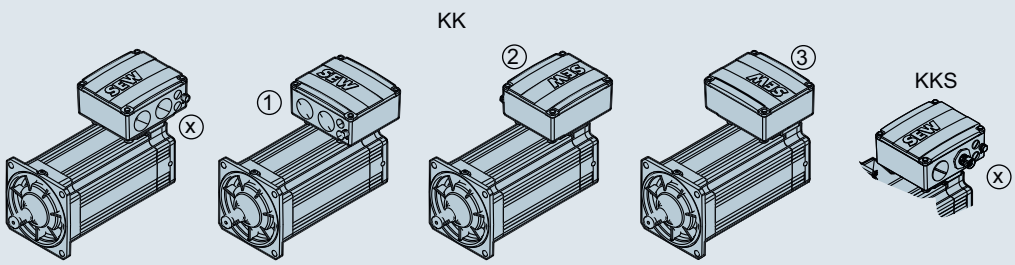

The cable entry position is specified with x, 1, 2, 3.
Unless indicated otherwise in your order, you will receive the terminal box type 270° with “x” cable entry.

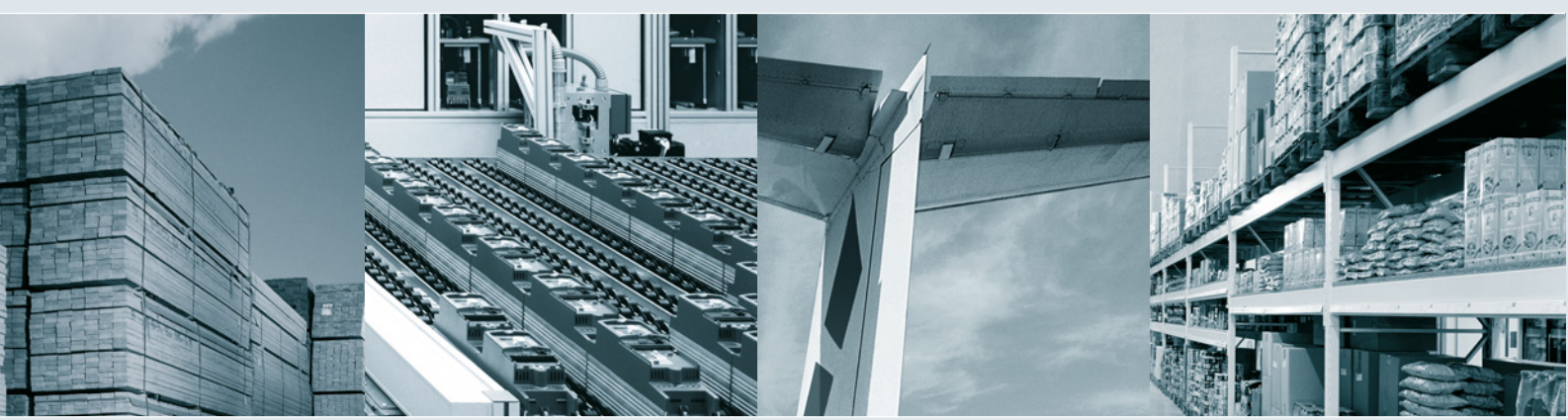



SEW-EURODRIVE
Driving the world

SEW-EURODRIVE GmbH & Co KG
P.O. Box 3023
D-76642 Bruchsal/Germany
Phone +49 7251 75-0
Fax +49 7251 75-1970
sew@sew-eurodrive.com
→ www.sew-eurodrive.com